Parts List

Carefully remove the parts from the carton, verify that you have received all components, and place them individually on a soft cloth to prevent scratches or other damage.

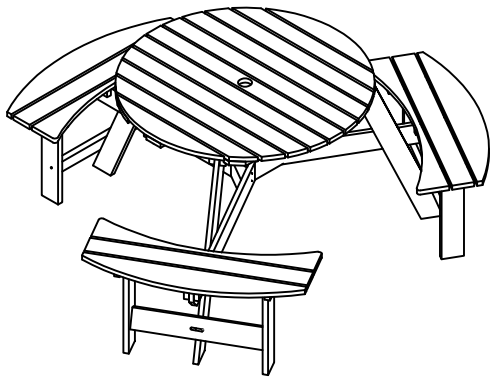

1	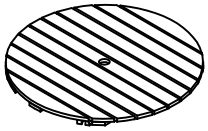	1PC
2		3PC
3	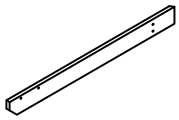	3PC
4	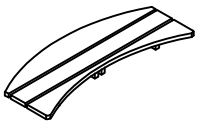	3PC
5		6PC
6		3PC
7	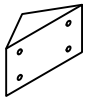	3PC

A		12PC
B		3PC
C		12PC
D		3PC
E		15PC
F		15PC
G	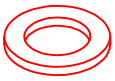	30PC
H		1PC
I		1PC
J		1PC
K		21PC
L		27PC
M		27PC
N		6PC

Step 1:Install the table top and legs

①	②	C	E	F	G	H	J
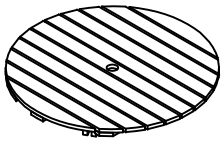	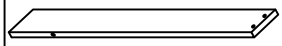						
1PC	3PC	6PC	6PC	6PC	12PC	1PC	1PC

As shown in the picture, fix the② table leg with the screw through the slot.

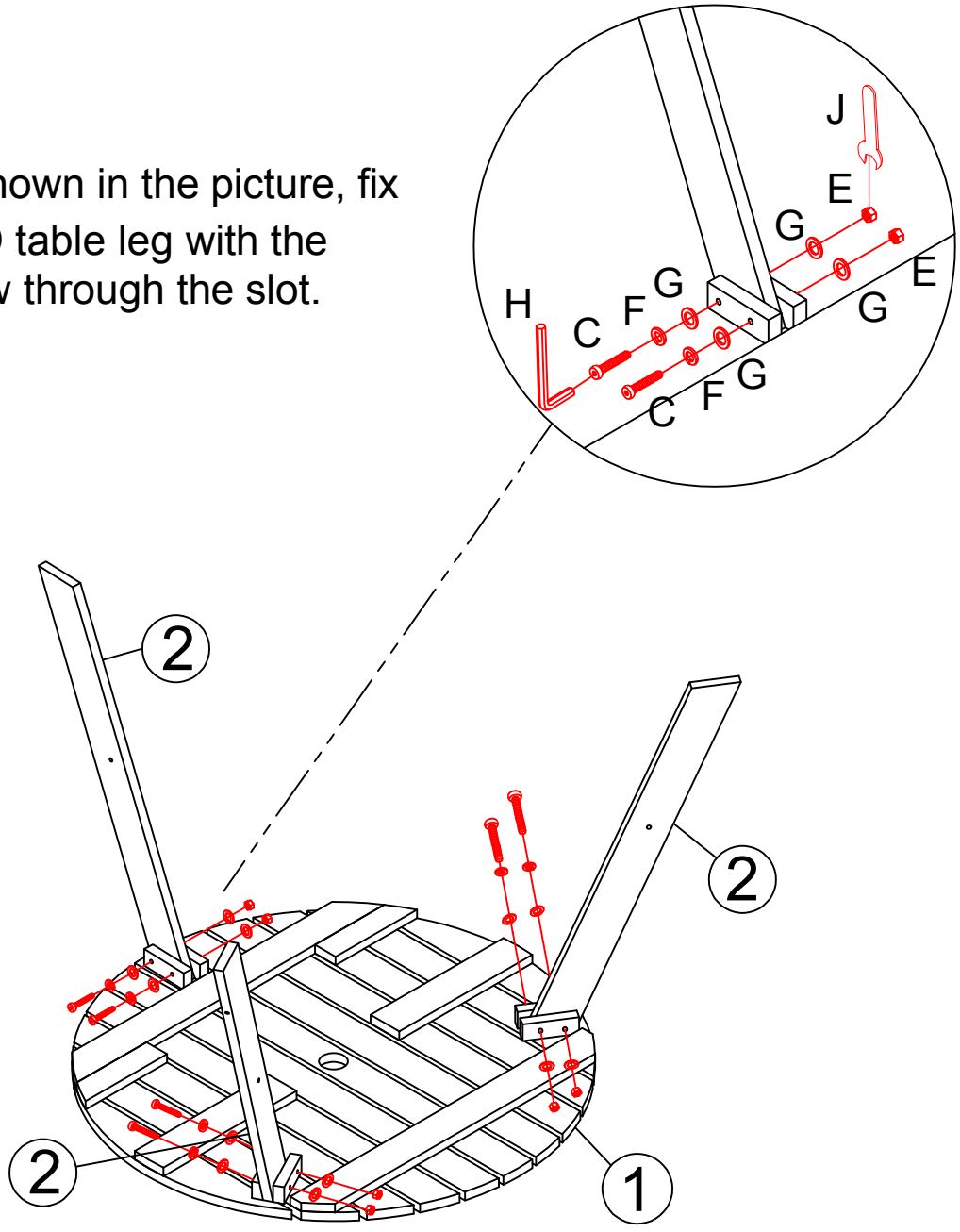

Step 2:Install the tripod

③	N	L	M	I
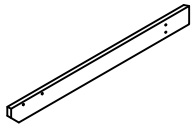				
3PC	6PC	6PC	6PC	1PC

Attach 3 pcs of ③ planks with screws as shown in the picture.

Note: Do not screw it in place at this stage.

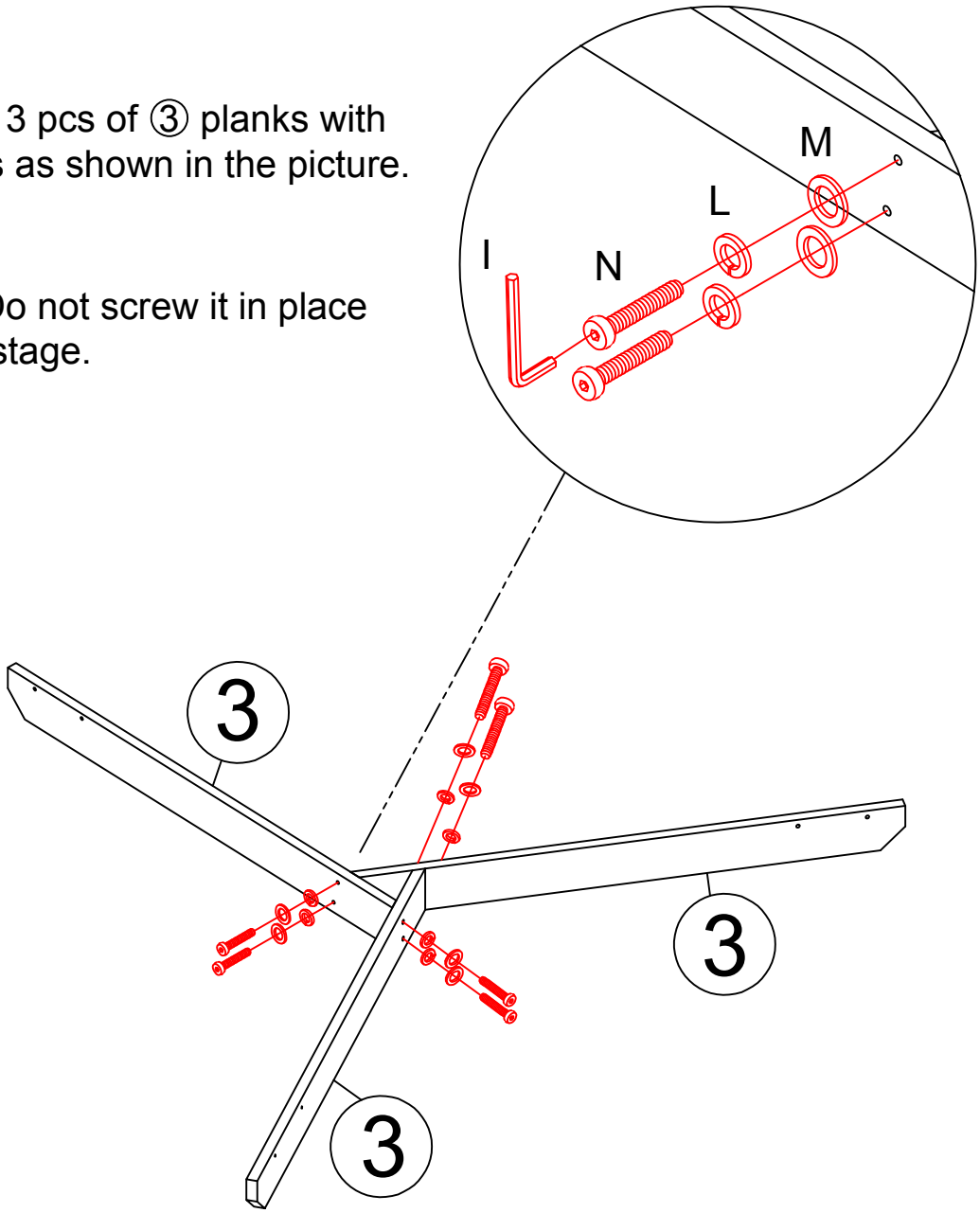

Step 3：Fix the table legs and tripod with screws as shown in the picture.

B	D	E	F	G	H	J
						
3PC	3PC	3PC	3PC	6PC	1PC	1PC

Note: As shown in the picture, the tripod must be placed in the same direction to ensure a smooth assembly. The tripod must be oriented towards the same side as shown in the picture to ensure smooth assembly.

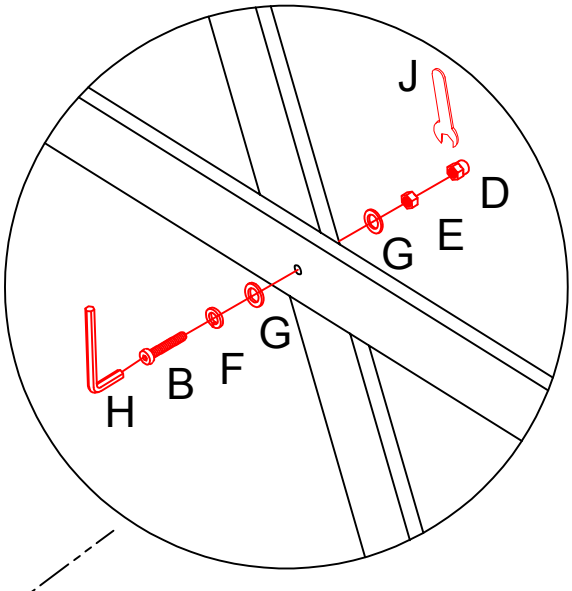

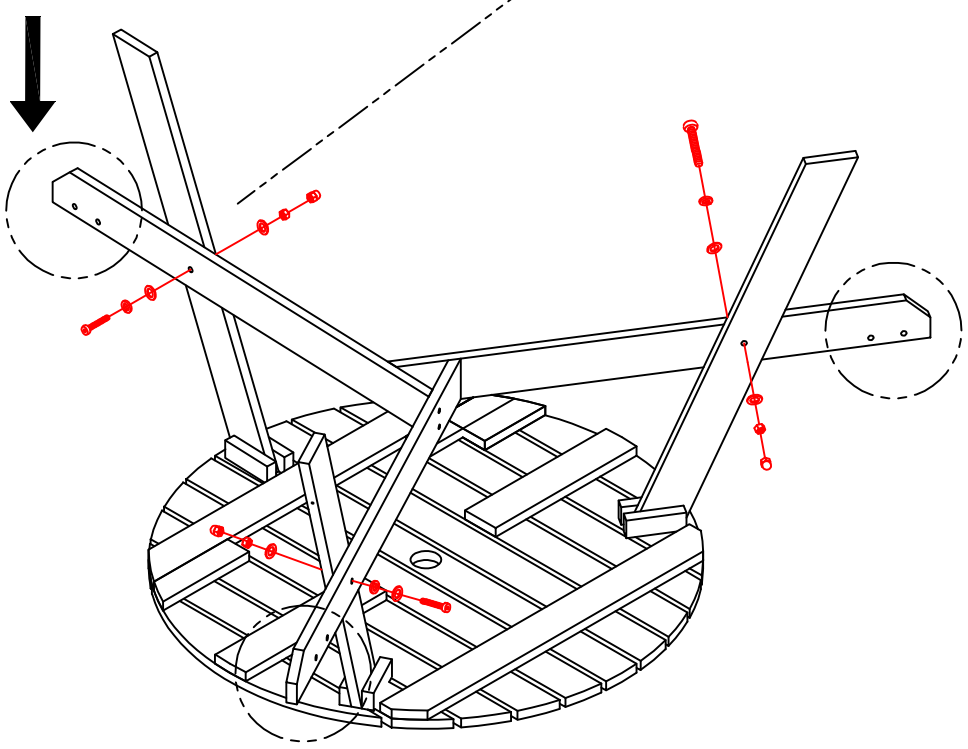

Step 4： Secure the triangular wood block to the tripod with screws as shown.

⑦	A
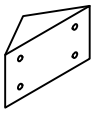	
3PC	12PC

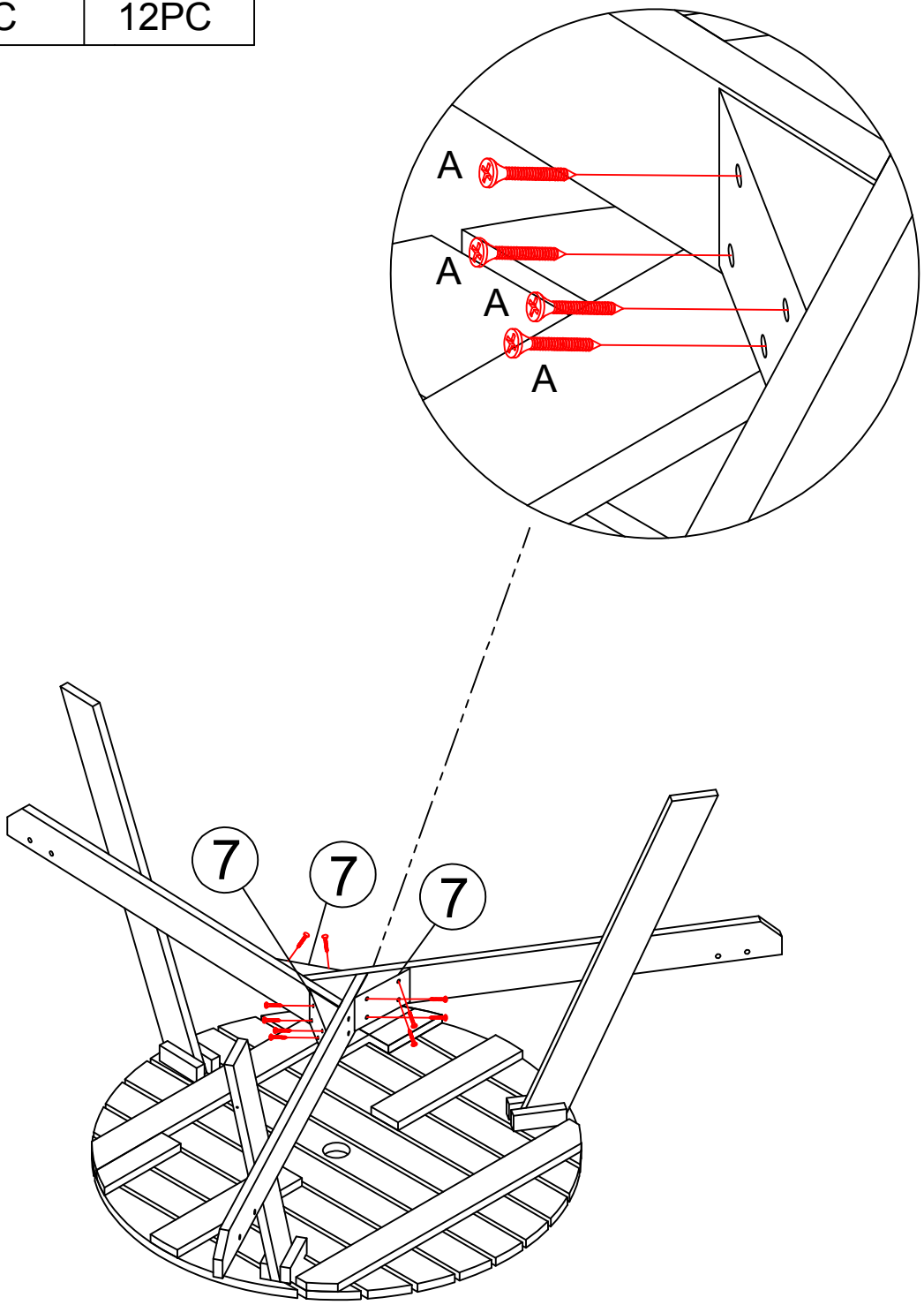

Step 5： Fix the stool with screws.

④	⑤	⑥	K	L	M	I
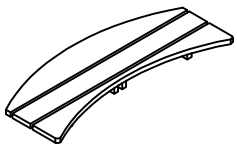	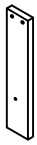	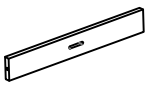				
3PC	6PC	3PC	18PC	18PC	18PC	1PC

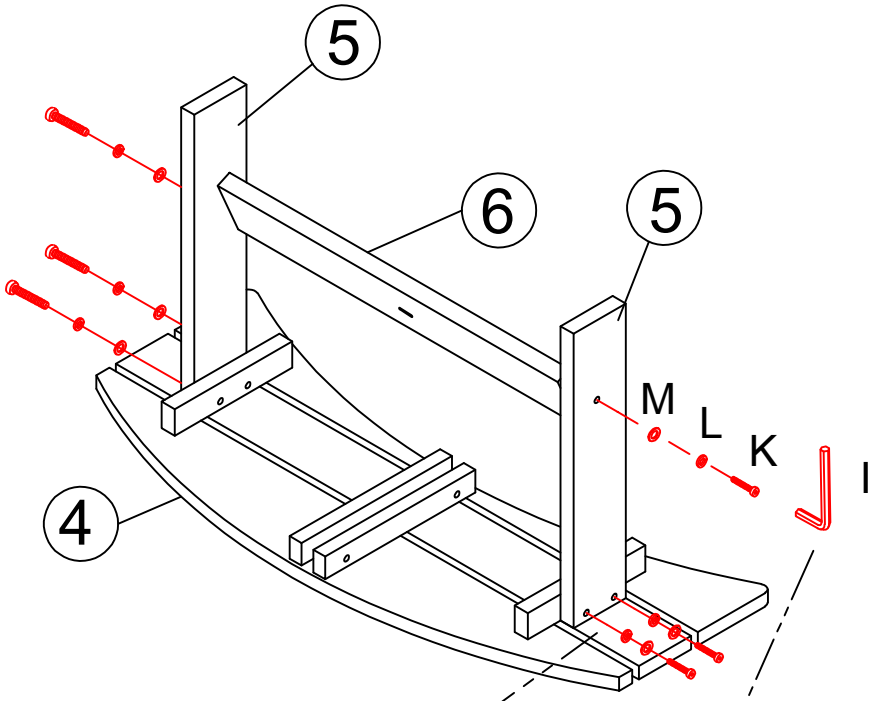

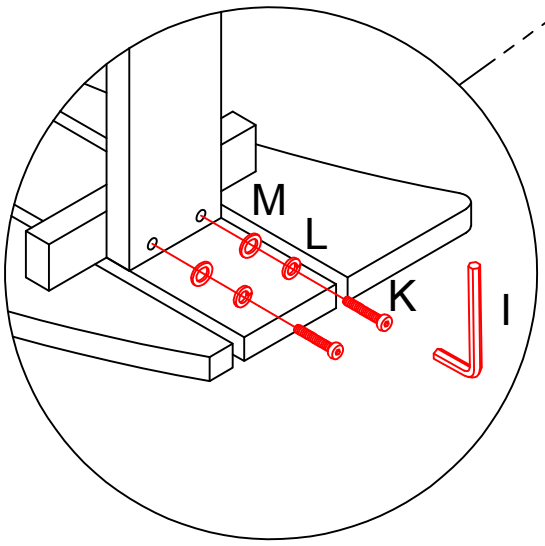

Note: Do not tighten the side plate⑤and side plate⑥ screws completely.
Wait until step 7 is completed before tightening. Prevent the board⑥holes from not fiting properly.

Step 6： Attach the stool to the tripod.

C	E	F	G	J	H
		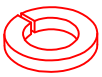			
6PC	6PC	6PC	12PC	1PC	1PC

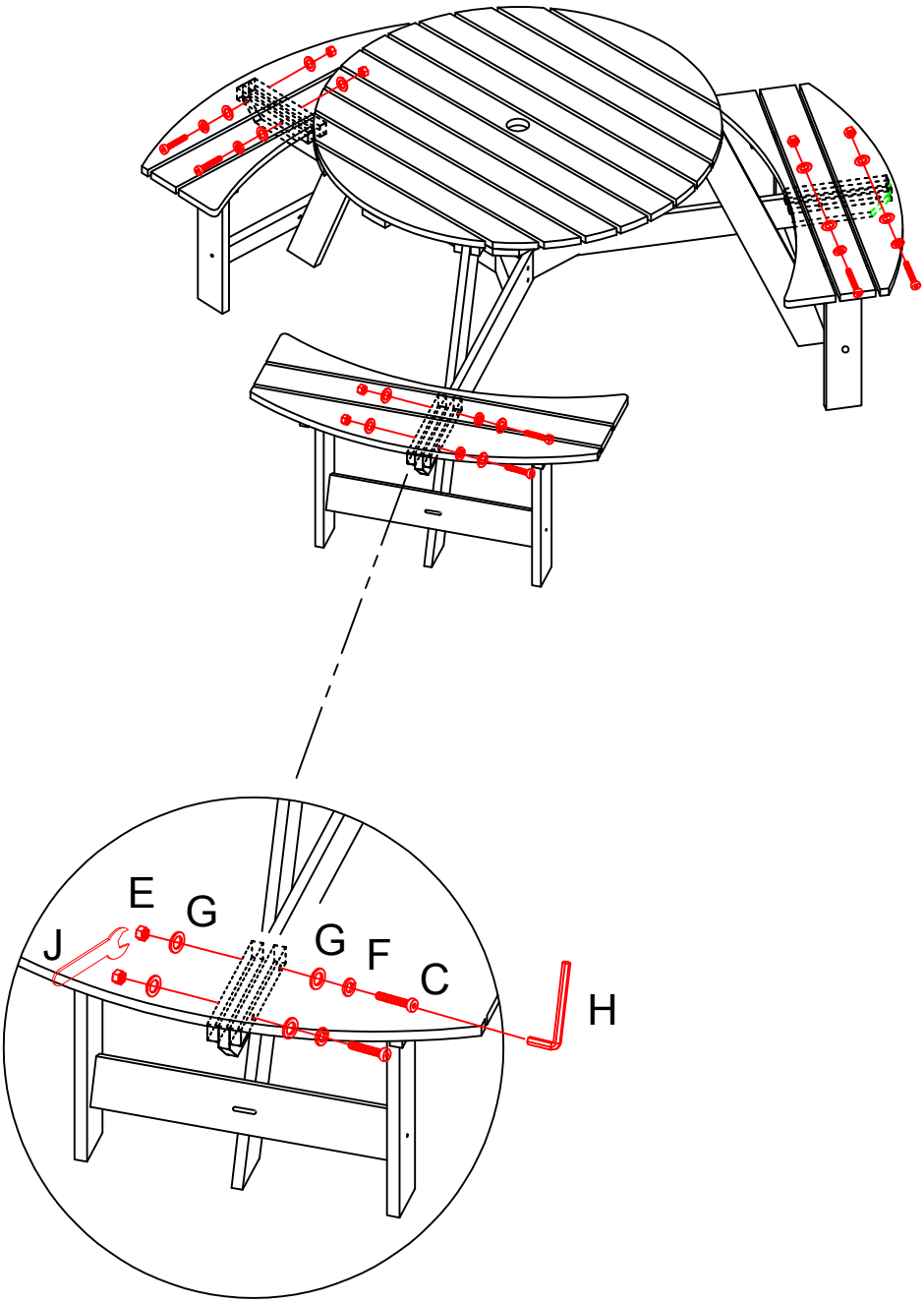

Step 7： Fix table legs and stools with screws.

K	L	M	I
			
3PC	3PC	3PC	1PC

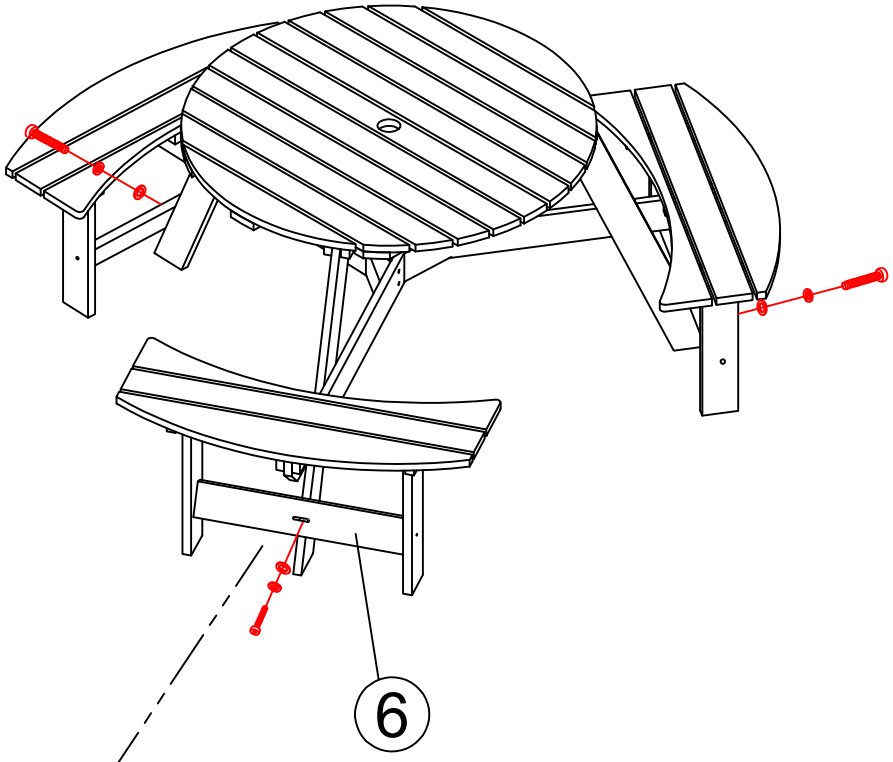

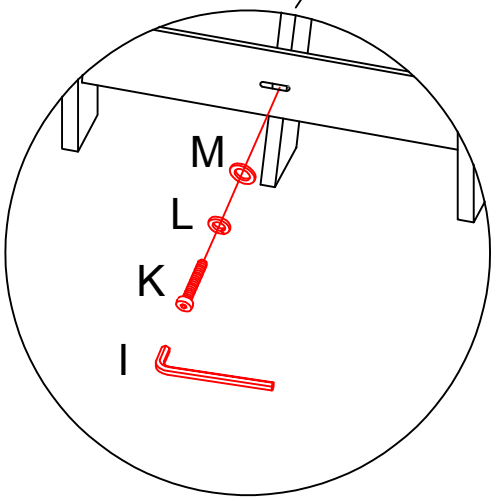

Note: There is no need to adjust the direction of the wooden board⑥, and it can be installed normally on both sides.