ALUMINUM STAIR RAILING DETAIL

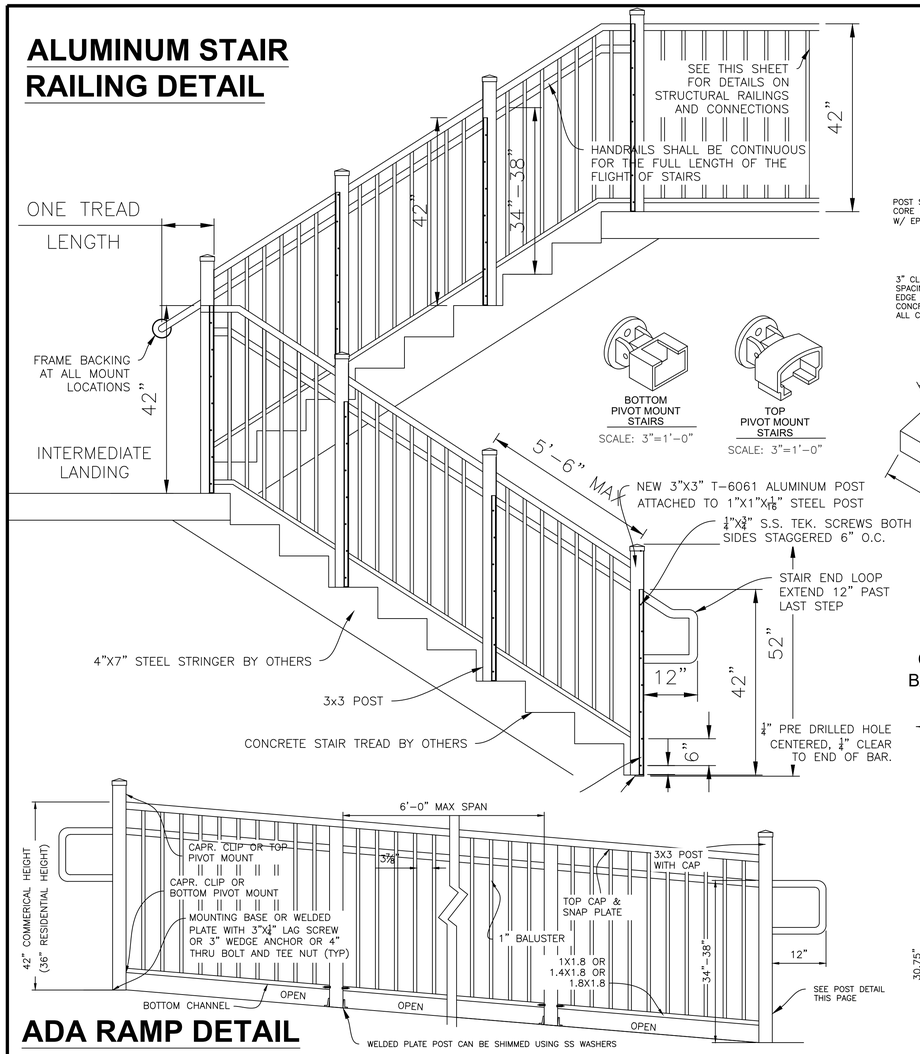

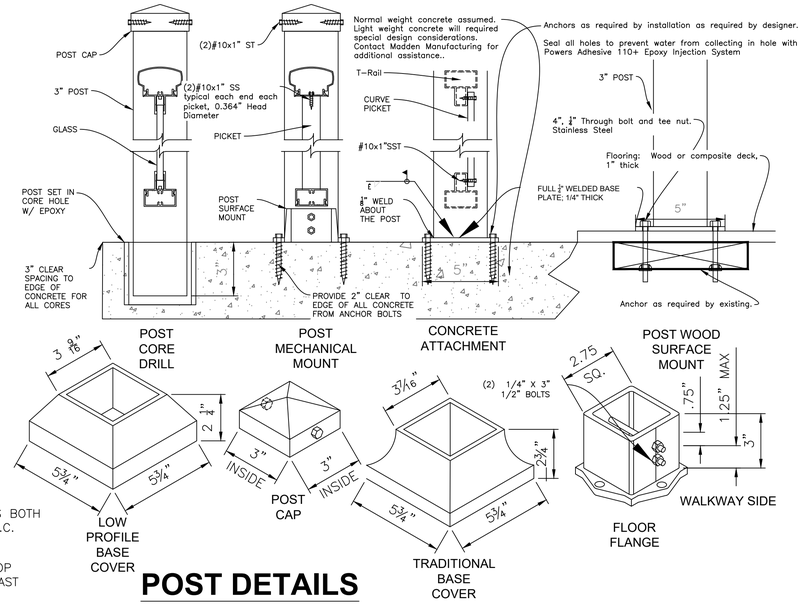

POST DETAILS

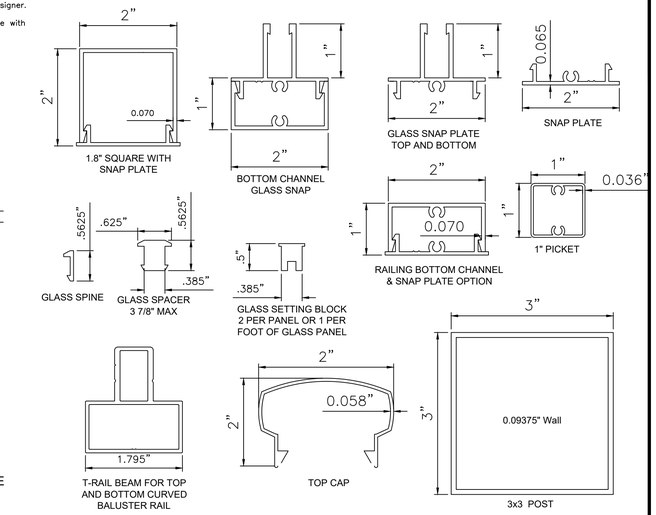

RAILING EXTRUSIONS

ADA RAMP DETAIL

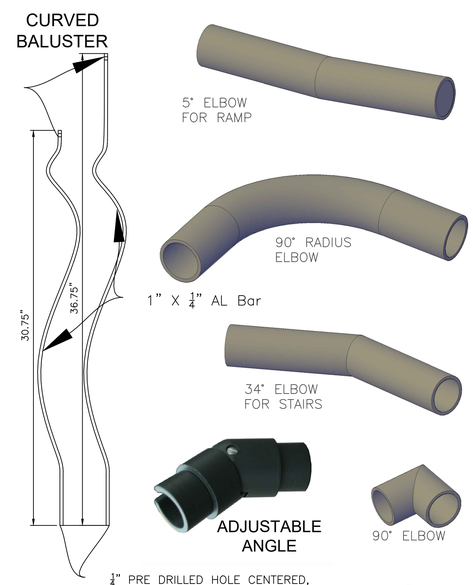

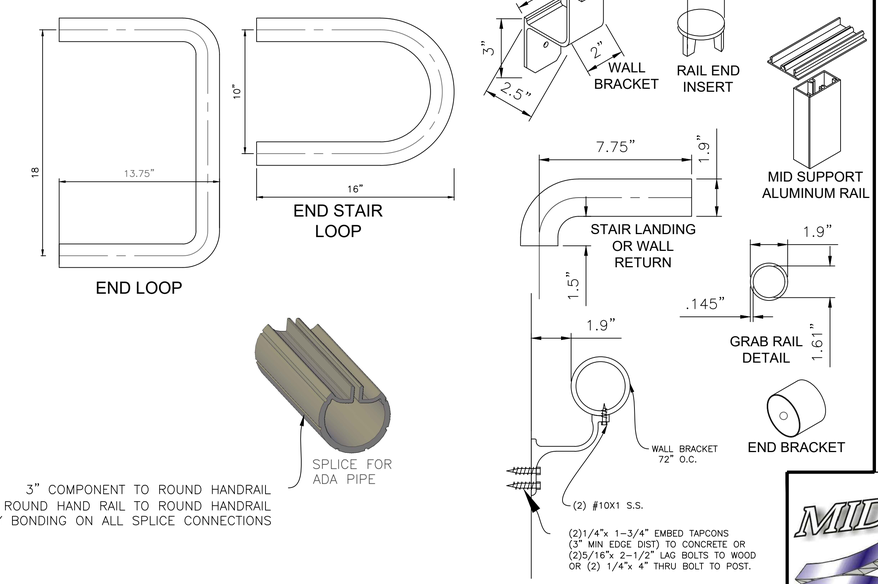

POOL RAILING AND GATE DETAIL

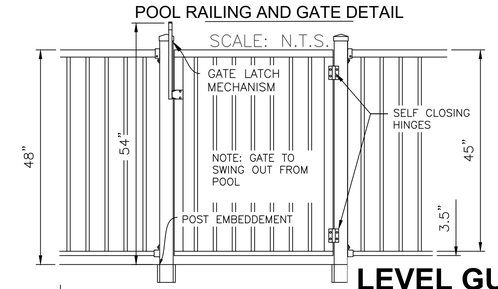

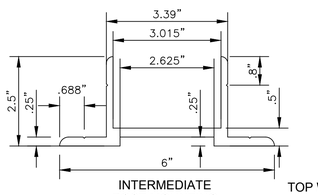

LEVEL GUARDRAIL DETAILS

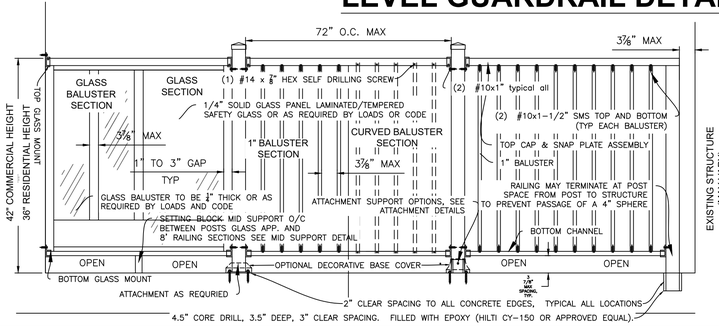

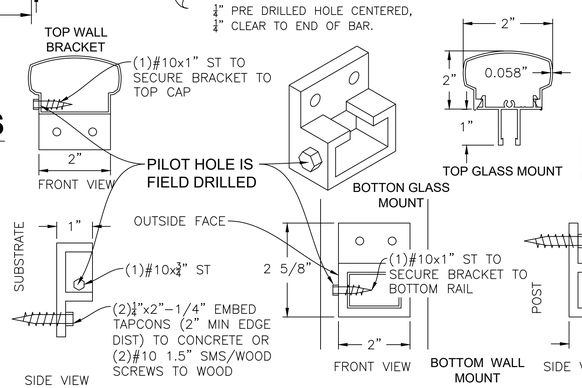

RAILING MOUNTS

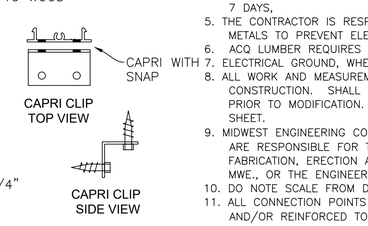

GENERAL NOTES:

1. THIS SYSTEM HAS BEEN DESIGNED IN ACCORDANCE WITH THE REQUIREMENTS OF 2018 INTERNATIONAL BUILDING CODE AND 2017 FLORIDA BUILDING CODE 6TH ADDITION.
2. ALL FASTENERS TO BE #10 X 3/4" OR BETTER STAINLESS STEEL.
3. ALL EXTRUDED MEMBERS SHALL BE ALUMINUM ALLOY TYPE 6061-T6, OR 6005-T5.
4. ALL CONCRETE AND EPOXY TO REACH A MINIMUM COMPRESSIVE STRENGTH OF 3000 PSI IN 7 DAYS,
5. THE CONTRACTOR IS RESPONSIBLE TO INSULATE ALUMINUM MEMBERS FROM DISSIMILAR METALS TO PREVENT ELECTROLYSIS.
6. ACQ LUMBER REQUIRES STAINLESS STEEL FASTENERS.
7. ELECTRICAL GROUND, WHEN REQUIRED, TO BE DESIGNED AND INSTALLED BY OTHERS.
8. ALL WORK AND MEASUREMENTS SHALL BE FIELD VERIFIED BY OTHERS PRIOR TO CONSTRUCTION. SHALL BE NOTIFIED IMMEDIATELY OF ANY INACCURATE INFORMATION PRIOR TO MODIFICATION. FABRICATION AND INSTALLATION OF MATERIALS SHOWN ON THIS SHEET.
9. MIDWEST ENGINEERING COMPANY, LLC (MWE)., AND THE ENGINEER SEALING THIS DRAWING ARE RESPONSIBLE FOR THE STRUCTURAL DESIGN ONLY AS SHOWN ON THIS DRAWING. FABRICATION, ERECTION AND CONSTRUCTION PRACTICES ARE NOT THE RESPONSIBILITY OF MWE., OR THE ENGINEER SEALING THIS DRAWING.
10. DO NOTE SCALE FROM DRAWINGS. SEE PRODUCT SPECIFICATIONS FOR FURTHER DETAIL.
11. ALL CONNECTION POINTS TO EXISTING STRUCTURE SHALL BE ENGINEERED, VERIFIED AND/OR REINFORCED TO COMPLY WITH IBC AND LOCAL CODE REQUIREMENTS.
12. SEE PAGE S-2 FOR ADDITIONAL DETAILS.
13. INSTALLATION SHALL COMPLY WITH ALL DRAWINGS, ALUMINUM ASSOCIATION SPECIFICATION, AND MANUFACTURE INSTALLATION INSTRUCTIONS.

COLORADO LICENSED
MATTHEW J MARSHANE
53504
PROFESSIONAL ENGINEER
6/11/20

ALUMINUM RAILINGS AND HANDRAILS

Standard Drawing

MADDEN MFG. CO

331 DOGWOOD ROAD, LAKE OZARK, MISSOURI 65049

573-365-7040 800-248-1520

MIDWEST ENGINEERING
5610 Alona Point
Osage Beach, MO 65065
matt.m@mwec.us
Telephone: 573-216-0066
www.mwec.us

MO Corp: 2001015503
Expires 12/31/21

NO. 1
DATE 6/11/20
DR'N. MJM
CKD.

S-1