KOHLER. Faucets

Purist®

Wall-mount bathroom sink faucet trim with Cross handles, 1.2 gpm

K-T14414-3

Features

- Dual-control wall-mounted
- Cross handles
- Stationary spout
- Less drain
- 9" (229 mm) 90° spout from wall to center of drain
- 1.2 gpm (4.5 lpm) maximum flow rate at 60 psi (4.14 bar)
- Valve sold separately



Material

- Brass

Required Products/Accessories

K-410-K Wall-mount Valve

Recommended Products/Accessories

K-23726 Drain treatment
K-14375 24" Double Towel Bar
K-14377 Pivoting toilet paper holder
K-14435 18" Towel Bar
K-14436 24" Towel Bar
K-14441 Towel Ring
K-14443 Robe Hook
K-14444 Vertical toilet paper holder

ADA

WaterSense Meets EPA Criteria Certified by IAPMO R&T

Codes/Standards

ASME A112.18.1/CSA B125.1
NSF/ANSI/CAN 61
NSF/ANSI/CAN 372
DOE - Energy Policy Act 1992
EPA WaterSense®
California Energy Commission (CEC)
ADA
ICC/ANSI A117.1
NOM Standards
NOM 012-CONAGUA

KOHLER® Faucet Lifetime Limited Warranty

See website for detailed warranty information.

Available Colors/Finishes

Color tiles intended for reference only.

Color	Code	Description
	CP	Polished Chrome
	SN	Vibrant® Polished Nickel
	AF	Vibrant® French Gold
	BN	Vibrant® Brushed Nickel
	BV	Vibrant® Brushed Bronze
	BL	Matte Black
	2MB	Vibrant® Brushed Moderne Brass

KOHLER. Faucets

Purist®

Wall-mount bathroom sink faucet trim with Cross handles, 1.2 gpm

K-T14414-3

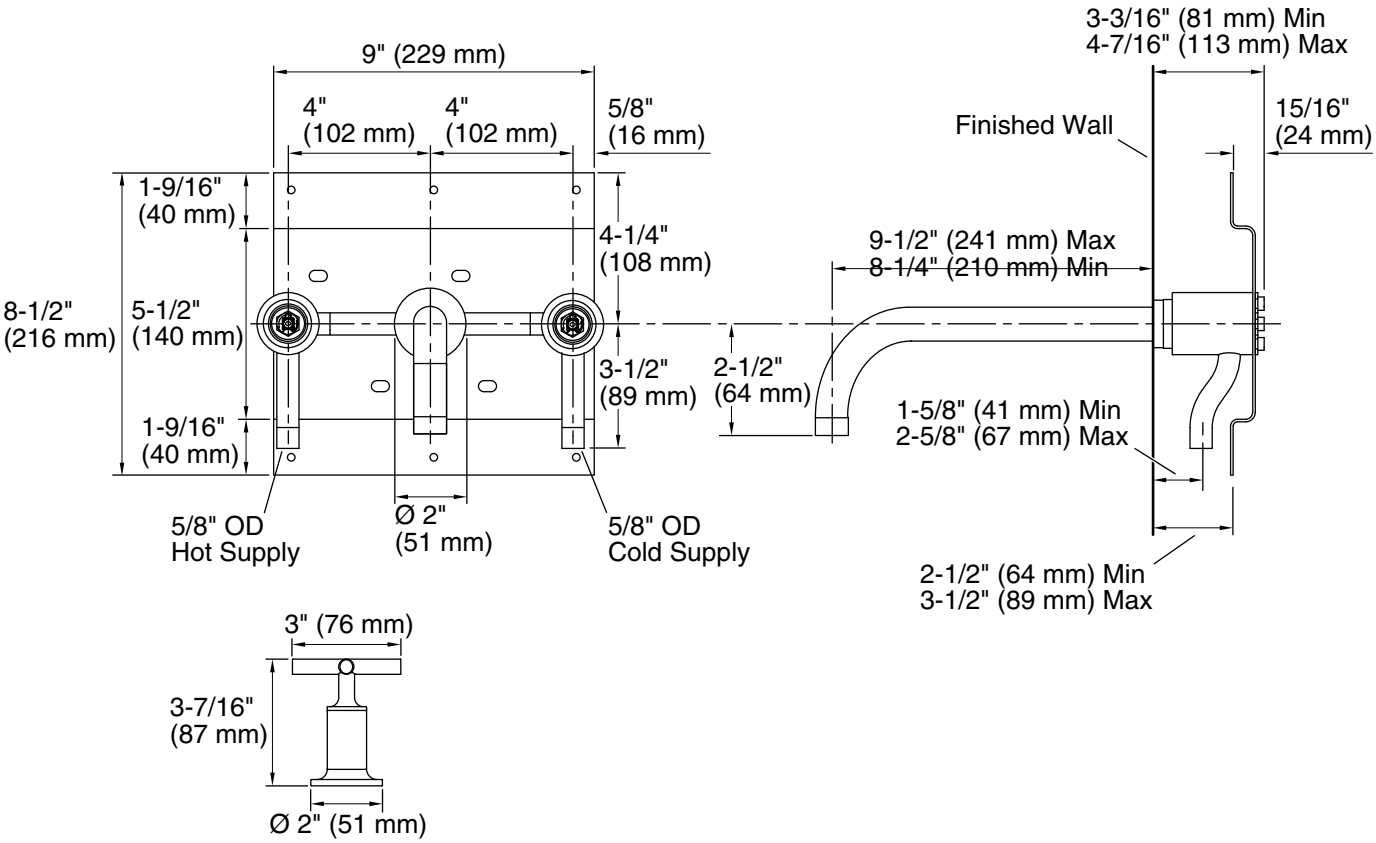

Technical Information

All product dimensions are nominal.

Faucet flow rate: 1.2 gal/min (4.5 l/min)

Spout:

Spout reach: 9-1/2" (241 mm)

Notes

Install this product according to the installation guide.

The distance between the bottom of spout and top of the fixture rim must not be less than 1-1/2" (38 mm) and not greater than 6" (152 mm).

Three 1-1/2" (38 mm) diameter cutout holes are required for spout and handles.

ADA compliant for handles only.

ADA compliant when installed to the specific requirements of these regulations.