INSTALLATION MANUAL

SFS1135

IMPORTANT NOTICE

⚠ Ensure the pipes are clear and flush or blow out debris before installation to prevent blockages.

- Please read this manual carefully before installation.
- Ensure all parts are included before starting the assembly.
- For replacement parts, please contact us using the contact information in the footer.

LIFETIME LIMITED WARRANTY

EVERSTEIN, a brand committed to the highest standards of quality and craftsmanship, provides a Lifetime Limited Warranty for its shower systems. This warranty is applicable to the original purchaser and covers defects in material or manufacturing workmanship, proof of purchase will be required in the case of a claim.

For manufacture defects, EVERSTEIN will, at its option, (1) replace the defective part or product free of charge, (2) refund the original purchase price of the product (valid for 30 days from the date of delivery).

EVERSTEIN recommends installation by a licensed professional plumber. EVERSTEIN is not responsible for any damage or product failure caused by improper installation, misuse or failure to use a licensed professional.

WARRANTY COVERAGE EXCLUSIONS:

This warranty does not cover defects or damage caused by the use of non-EVERSTEIN original parts. Furthermore, any damage resulting from faulty installation, product abuse, improper use, or the use of abrasive cleaners or solvents is not covered by this warranty. Labor charges and/or damage incurred during installation, repair, or replacement are also not the responsibility of EVERSTEIN.

LIMITATIONS OF LIABILITY:

Except as required by law, this warranty replaces all other warranties, conditions, and guarantees, whether expressed or implied, statutory or otherwise, including but not limited to merchantability or suitability. In certain states, provinces, and countries, the exclusion or limitation of incidental or consequential damages may not apply.

RESPONSIBILITIES OF OTHERS

Inspecting the unit prior to installation is the responsibility of the installer or building contractor who acts on behalf of the user. They are responsible for ensuring the unit is free of defect or damage. In the event of a problem, the unit must not be installed. EVERSTEIN is not responsible for failures or damage that could have been discovered, repaired, or avoided by proper inspection and testing prior to installation.

Damage occurring in transit is the responsibility of the carrier. The user or installer MUST open the crate and inspect the unit for damage when it is delivered. If damage is discovered, it must be reported immediately to the EVERSTEIN and the carrier in writing.

WARRANTY SERVICE NOTE

When requesting warranty, be sure to have the following:
•Copy of original invoice
•Date of installation
•Description and pictures of defect
•Model number or description of model
To obtain warranty service and replacement part, please contact EVERSTEIN Customer Service Team. EVERSTEIN will determine whether to repair or replace your product, issue a refund.

CONTENT

1.Adjustable Shower Slide Bar Set Installation Manual---------- (1-4)

CONTENIDO

1.Manual de instalación del conjunto de barra deslizante ajustable para ducha -------- (5-8)

◆ Installation and Maintenance Matters

1.Check the accessories list to verify that all parts are complete in this package.

2.Do not disassemble the main body by yourself.

3.Connect inlet pipes to supply valves.

4.Make sure inlet pipes and supply valves have no impurities and are cleaned, with no impurities in the pipeline.

5.After installation, check all joints for leakages.

6.Do not leave the rain shower system exposed to a severely corrosive environment.

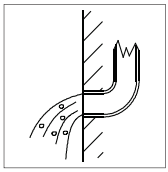

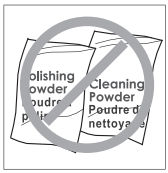

Do's

1.In order to keep the mixer surface bright, please clean the mixer regularly.

2.Rinse the faucet with clean water and wipe it with a soft cotton cloth.

3.Use one of the following cleaners to remove dirt from the surface: a. Mild liquid cleaner. b. Colorless glass cleaner and powder cleaner that do not cause abrasion and can be dissolved completely. c. Polish liquid that does not cause abrasion.

Don'ts

a. Avoid using cleaning powder, harsh cleaning chemicals, brushes and coarse cloth to prevent scratching and friction.

b. Do not use acid cleaners to clean the faucet as they may cause surface corrosion of the faucet. If the faucet is exposed to harmful acid substances, please rinse it immediately with water.

Tools Needed:

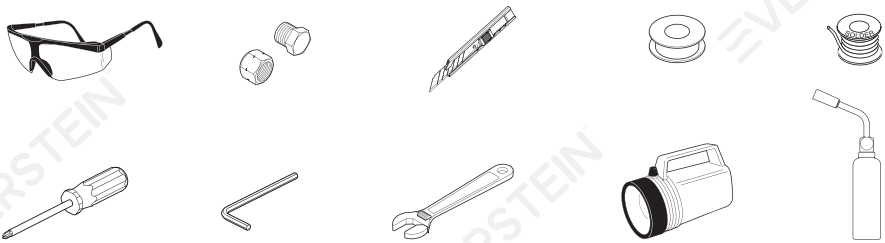

◆ Adjustable Shower Slide Bar Set

Accessories List

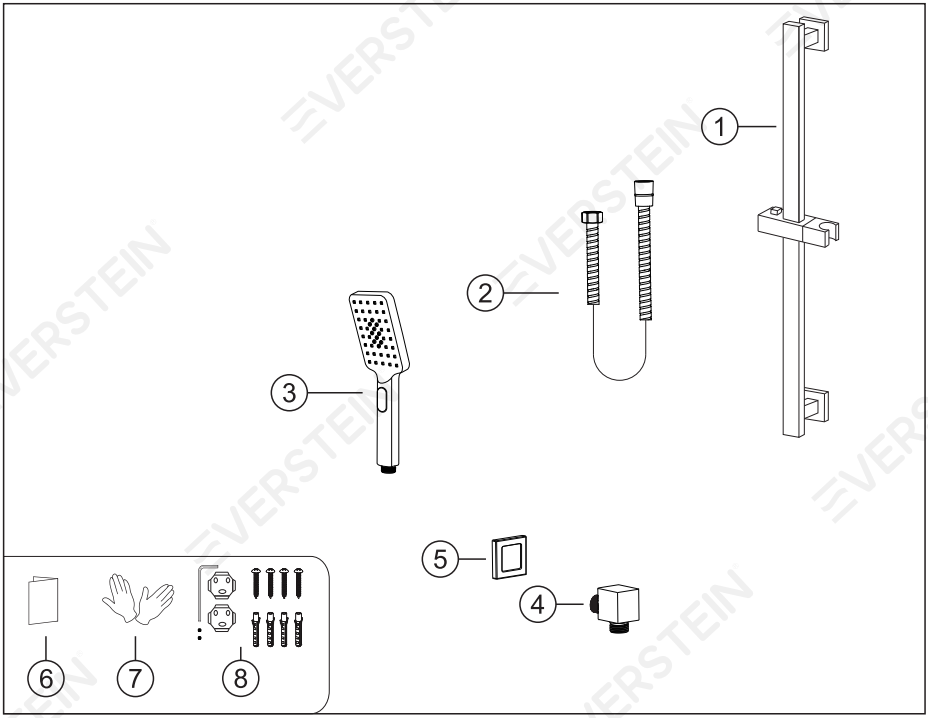

No.	Part name	Qty	No.	Part name	Qty
1	Slide bar	1	5	Connector flange	1
2	Shower hose	1	6	Instruction manual	1
3	Hand shower	1	7	Gloves	2
4	Connector	1	8	Slide bar parts	1set

◆ Essential Dimensions & Water Pipe Line

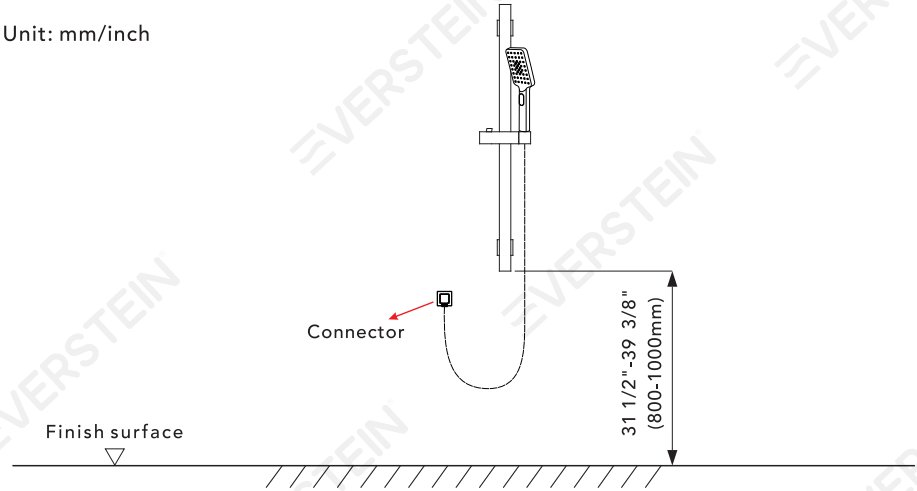

◆ The Installation Depth of Connector

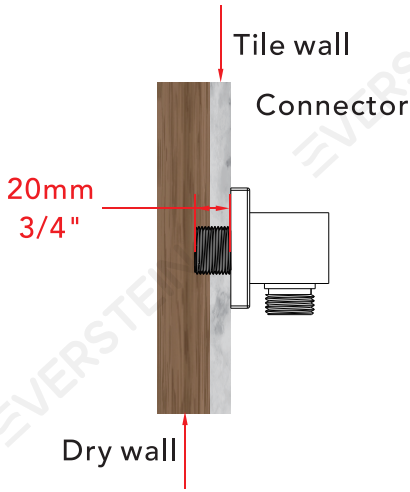

The thickness of the tile must be calculated for installation.
Connector size of male thread: USA: 1/2"-14NPT, Canada: 1/2"-14NPT, Europe: G1/2".

◆ Slide Bar Installation

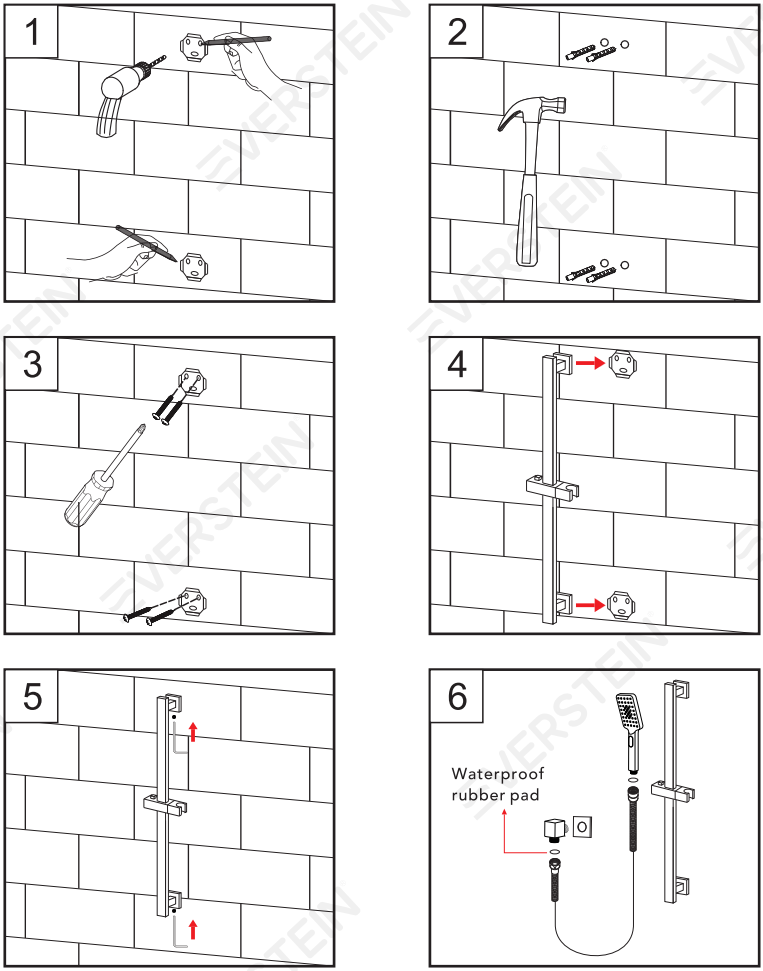

1.Mark the drilling positions with a pen, drill holes using a 6mm electric drill, and insert the wall anchors. Finally, place the base and secure it with screws.
2.Insert the shower slide bar into the base, then tighten the screw. Installation complete.

Step1.Wrap the connector with Teflon tape, then screw the threaded end into the water pipe inside the wall.
Step2.Install the rubber pad onto the shower hose and connect it to the connector.

◆ Instalación y cuestiones de mantenimiento

1.Verifique la lista de accesorios para comprobar que todas las partes están completas en este paquete.
2.No desmonte el cuerpo principal por sí mismo.
3.Conecte las tuberías de entrada a las válvulas de suministro.
4.Asegúrese de que las tuberías de entrada y las válvulas de suministro no tengan impurezas y estén limpias, sin impurezas en la tubería.
5.Después de la instalación, verifique todas las uniones para detectar fugas.
6.No deje el sistema de ducha tipo lluvia expuesto a un ambiente severamente corrosivo.

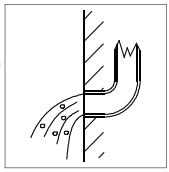

Hacer

1.En para mantener la superficie de la batidora brillante, limpie el mezclador regularmente.
2.inse el grifo con agua limpia y límpielo con un suave ropa de algodón.
3.Utilice uno de los siguientes limpiadores para eliminar la suciedad de la superficie: a. Limpiador líquido suave. b. Limpiador de vidrio incoloro y limpiador en polvo que no causen abrasión y que se puedan disolver completamente. c. Líquido pulidor que no cause abrasión.

No es decir

A.Valte con polvo de limpieza, productos químicos de limpieza duros, cepillos y tela gruesa para evitar rascar y fricción.
B. No use limpiadores de ácidos para limpiar el grifo, ya que pueden causar corrosión superficial del grifo. Si el grifo está expuesto a sustancias ácidas dañinas, enjuague inmediatamente con agua.

HERRAMIENTAS NECESARIAS:

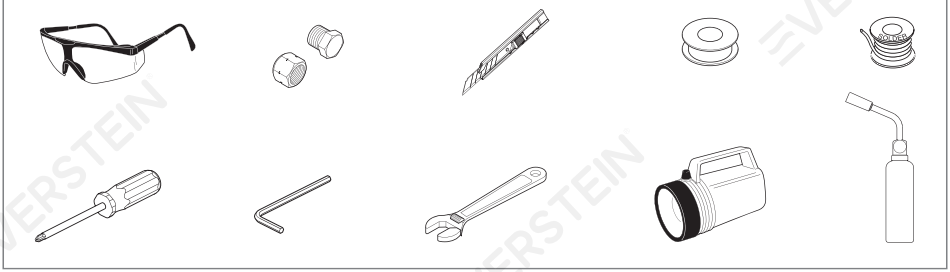

◆ Conjunto de barra deslizante ajustable para ducha

Lista de accesorios

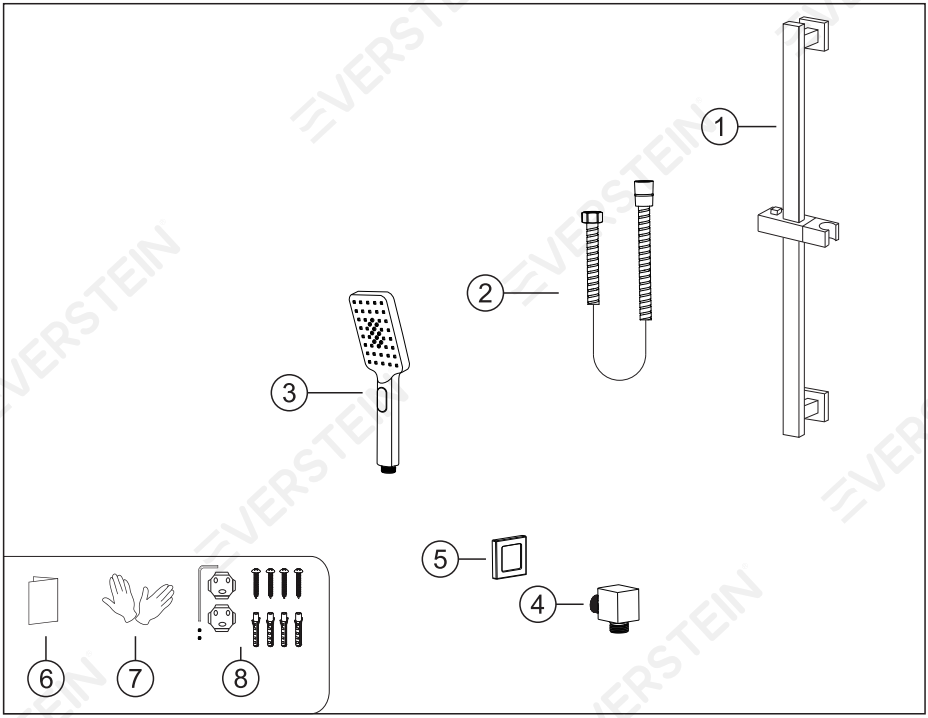

N.°	Nombre de la pieza	Cant	N.°	Nombre de la pieza	Cant
1	Barra deslizante	1	5	Brida de conector	1
2	Manguera de ducha	1	6	Manual de instrucciones	1
3	Ducha de mano	1	7	Guantes	2
4	Conector	1	8	Partes de la barra deslizante	1 juego

◆ Dimensiones esenciales y línea de tubería de agua

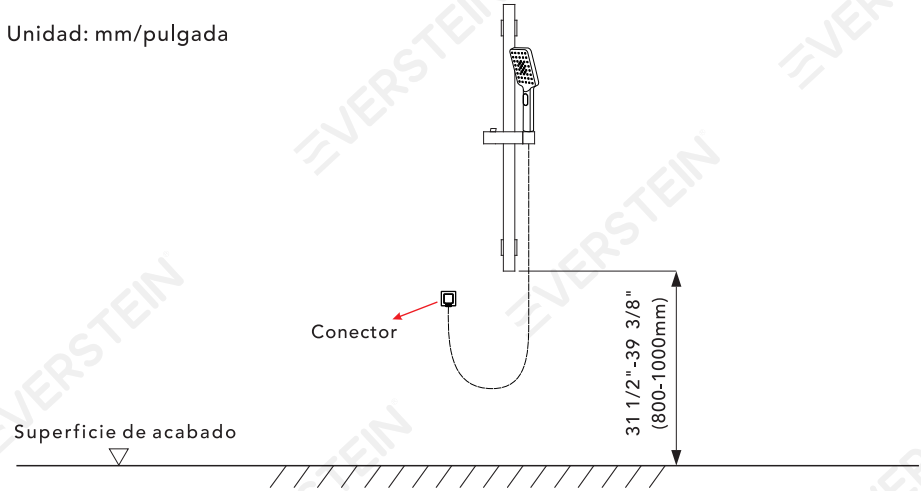

◆ La profundidad de instalación del conector

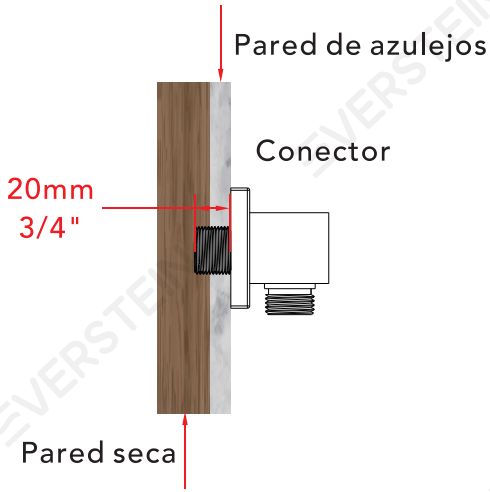

El grosor del azulejo debe calcularse para la instalación.
Tamaño del conector de rosca macho: EE.UU.: 1/2"-14NPT, Canadá: 1/2"-14NPT, Europa: G1/2".

◆ Instalación de la barra deslizante

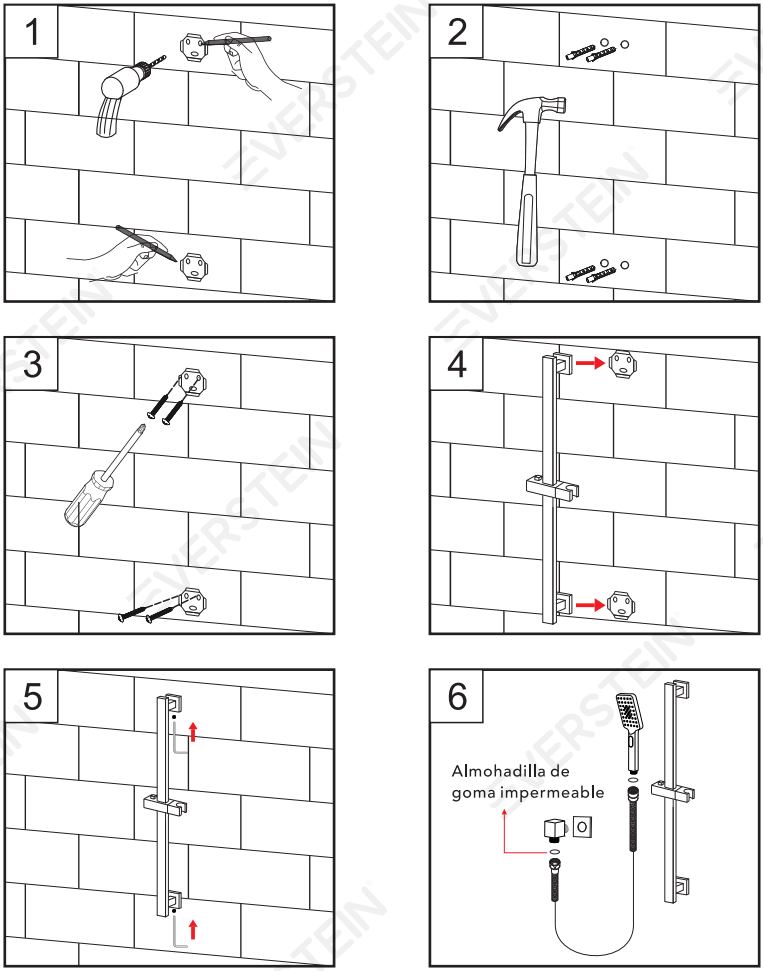

1. Marca las posiciones de perforación con un bolígrafo, haz los agujeros con un taladro eléctrico de 6 mm e inserta los tacos de pared. Finalmente, coloca la base y fíjala con tornillos.
2. Inserta la barra deslizante de ducha en la base y luego aprieta el tornillo. Instalación completa.

Paso 1. Envuelve el conector con cinta de teflón y enrosca el extremo roscado en la tubería de agua dentro de la pared.

Paso 2. Instala la almohadilla de goma en la manguera de ducha y conéctala al conector.