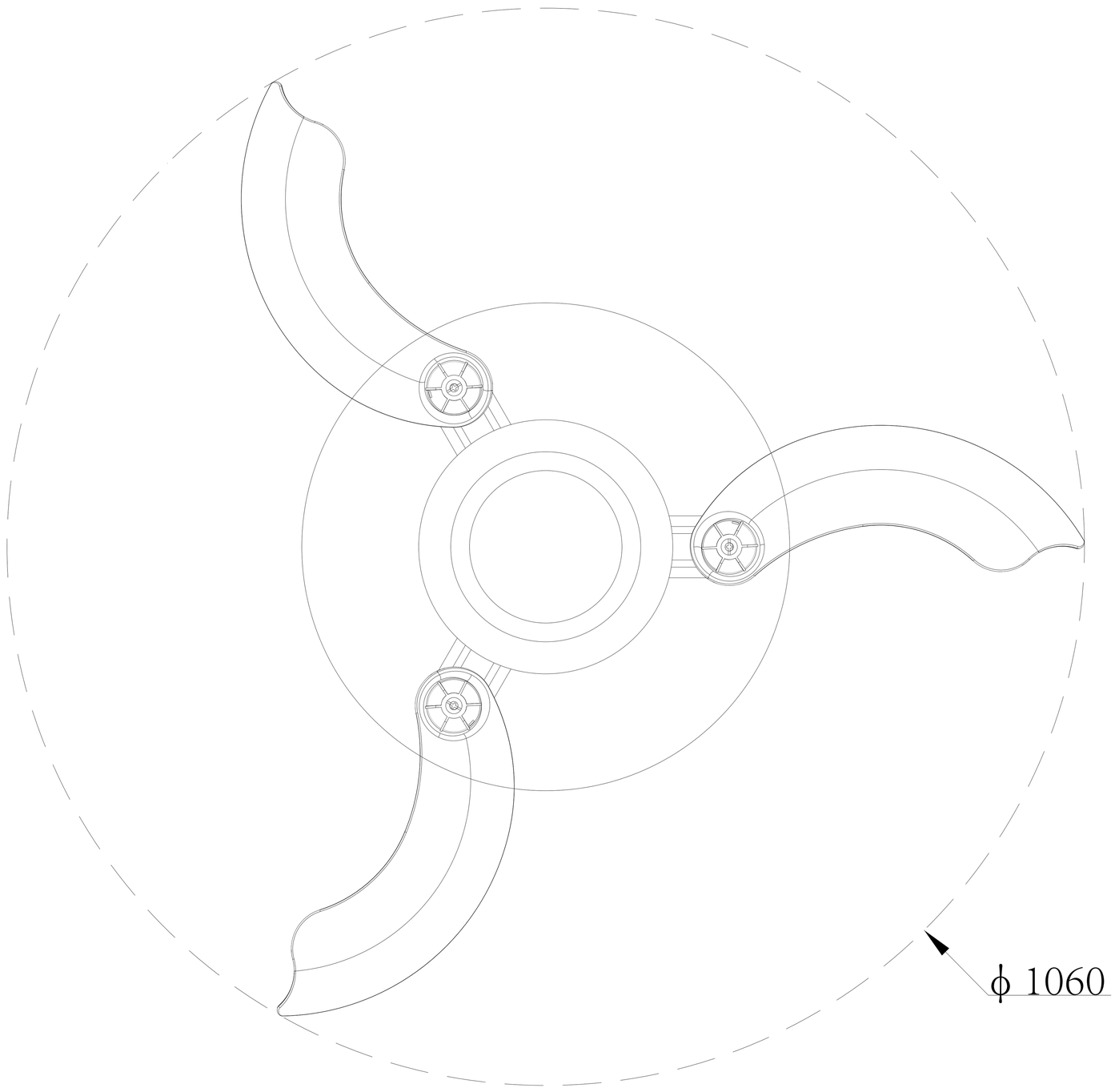
ϕ 1060

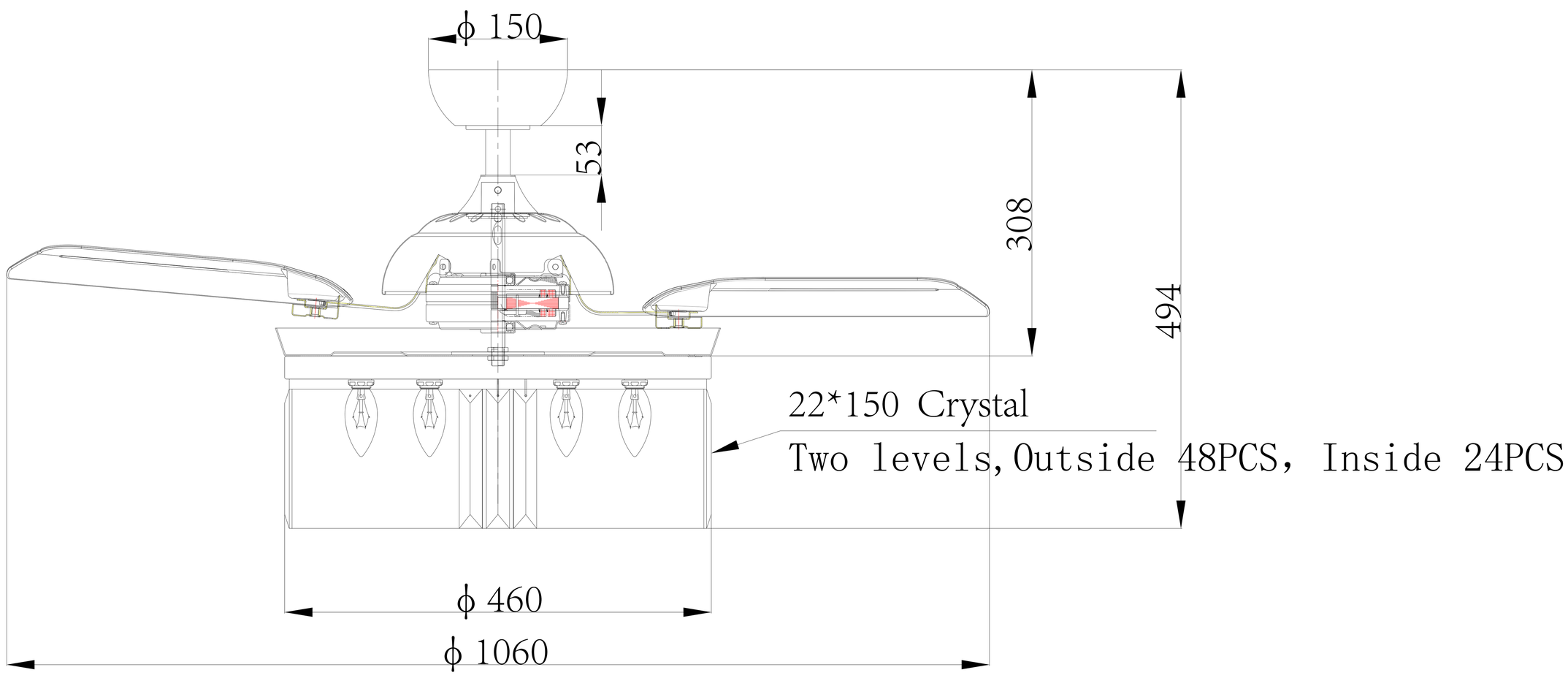
ϕ 150
53
308
494
22*150 Crystal
Two levels,Outside 48PCS, Inside 24PCS
ϕ 460
ϕ 1060

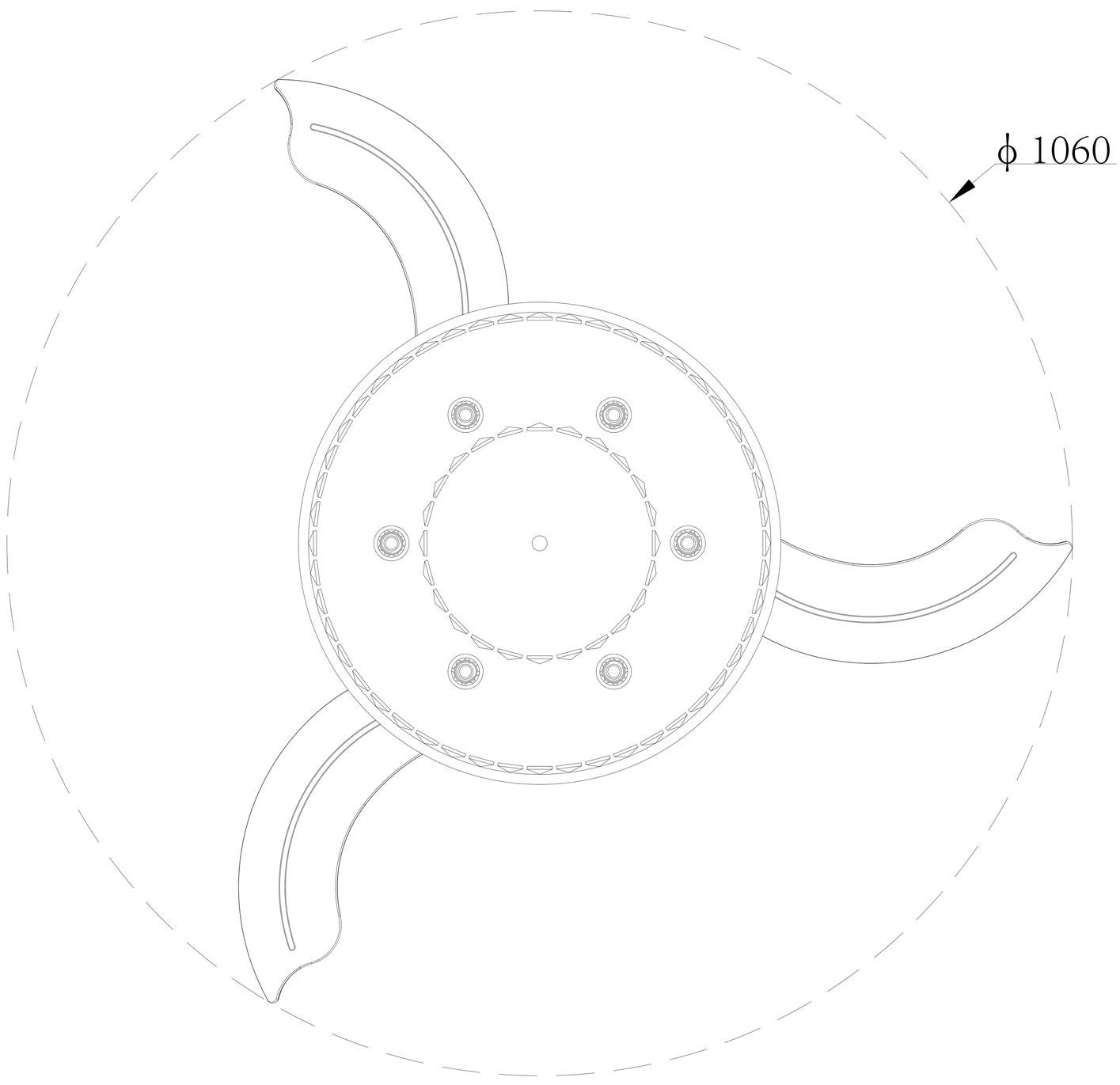
ϕ 1060