ASSEMBLY INSTRUCTIONS

332-90 RECTANGULAR DINING TABLE 72"-90" WITH LEAF

A Table Top	B Table Leaf	C Mounting Plate	D Table Leg Left
	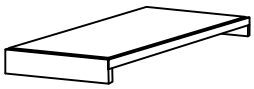	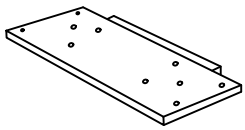	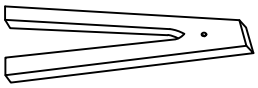
1 pc	1 pc	2 pcs	2 pcs
E Table Leg Right	F Crossbar	G JCBC Bolt M6 X 40mm	H Spring Washer M6
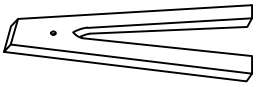	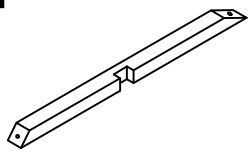	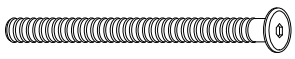	
2 pcs	4 pcs	24 pcs	24 pcs
I Allen Key M4			
			
1 pc			

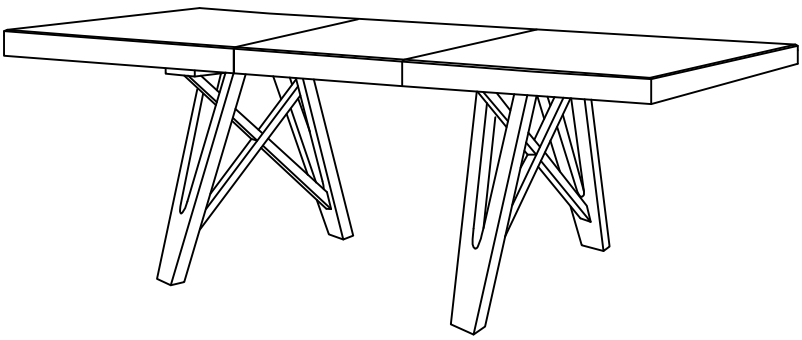

This page lists all the contents included in the box. Please take the time to identify the hardware as well as the individual components to this product. As you unpack and prepare for assembly, place the contents on a carpeted or padded area to protect them from damage.

1 Attach the Crossbar (F) together.

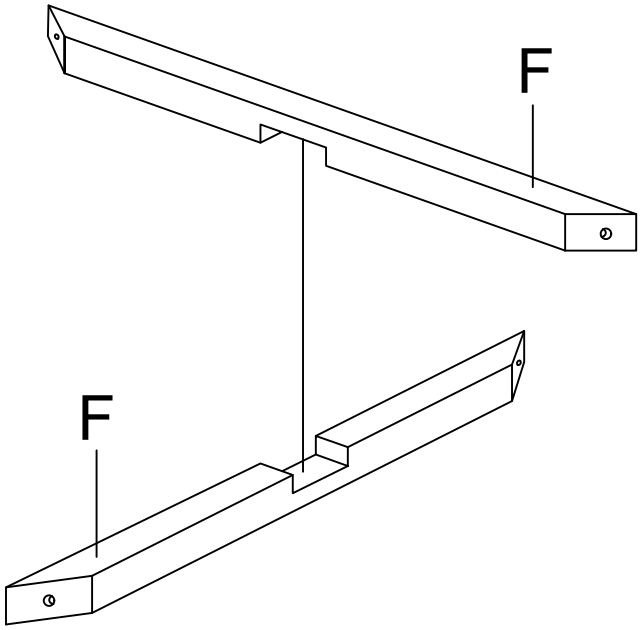

2 Attach the Crossbar (F) to the Table Leg Left & Right (D&E) using JCBC Bolt (G) and Spring Washer (H) with the Allen Key (I).

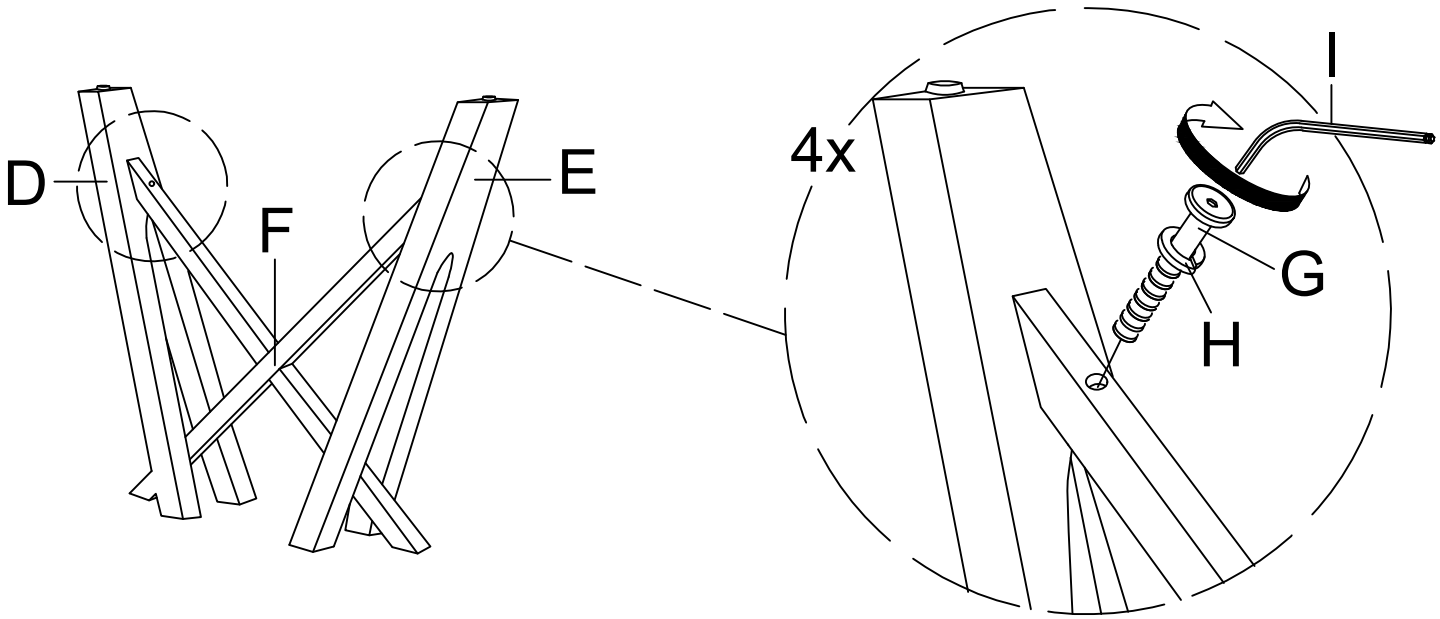

3 Attach the assembled Table Leg and Crossbar (D,E,F) to the bottom of the Mounting Plate (C) using JCBC Bolt (G) and Spring Washer (H) with the Allen Key (I).

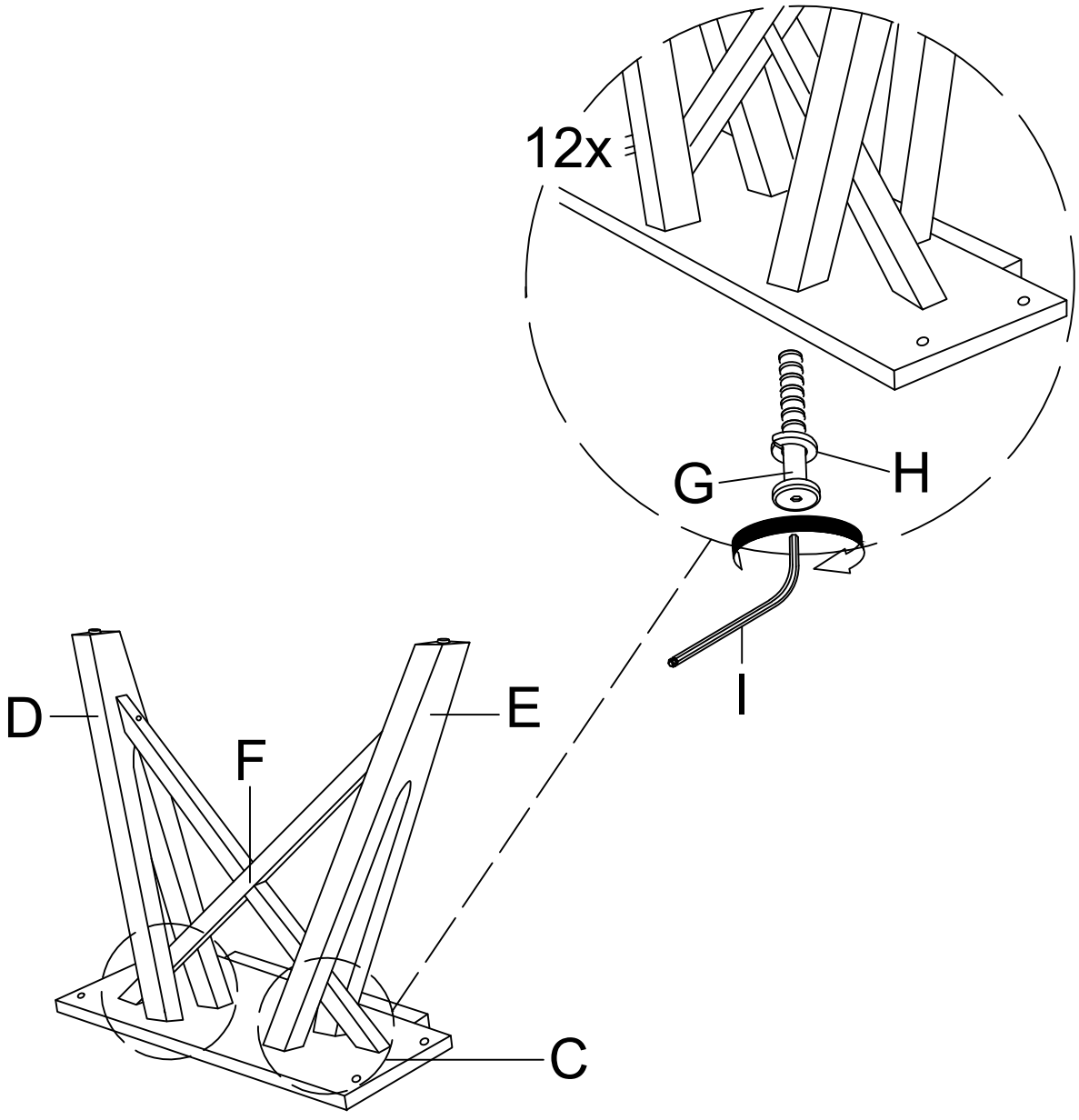

4 Attach the Mounting Plate (C) to the bottom of the Table Top (A) using JCBC Bolt (G) and Spring Washer (H) with the Allen Key (I).

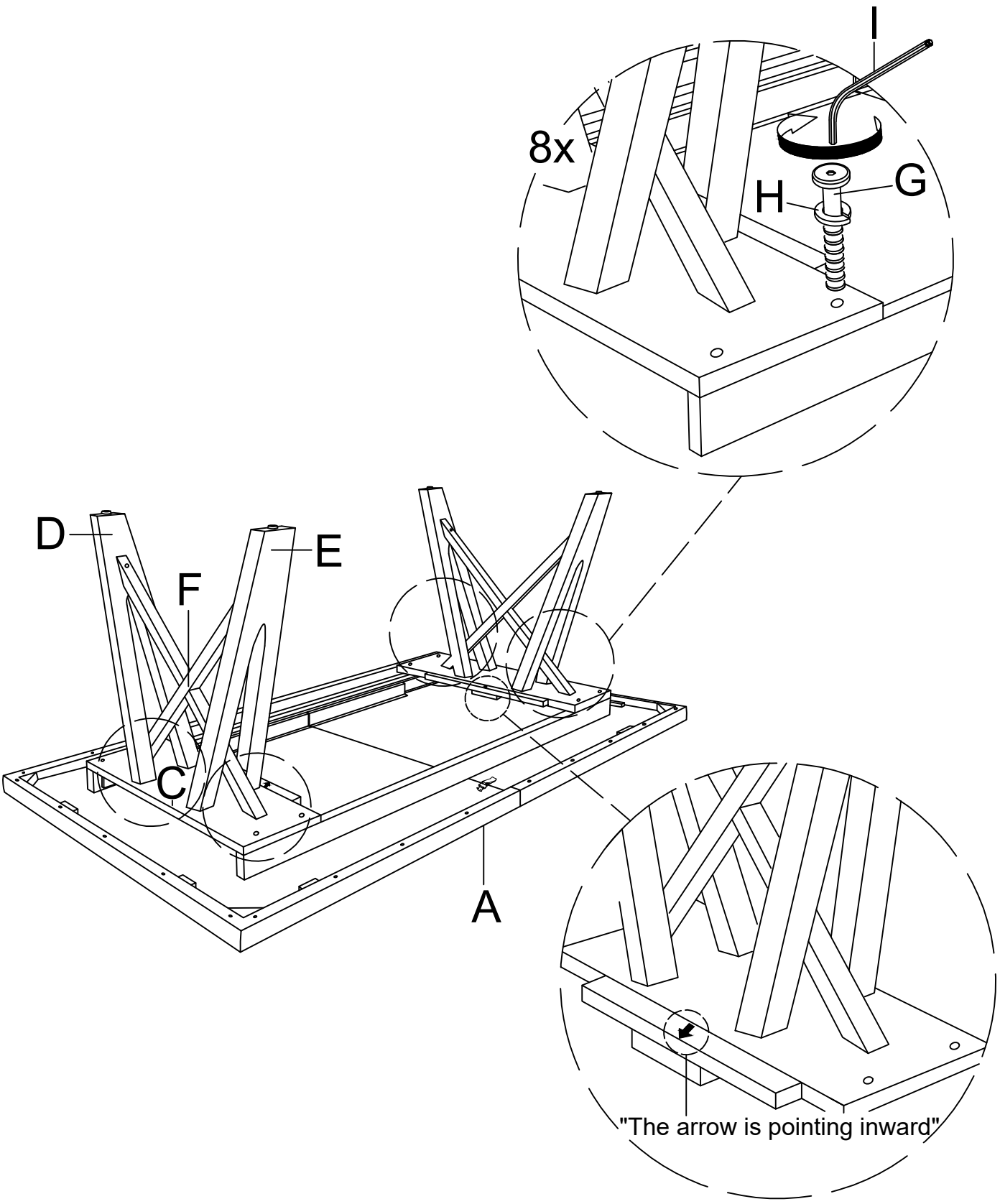

5 Open the hinges and pull out the Table Top (A).

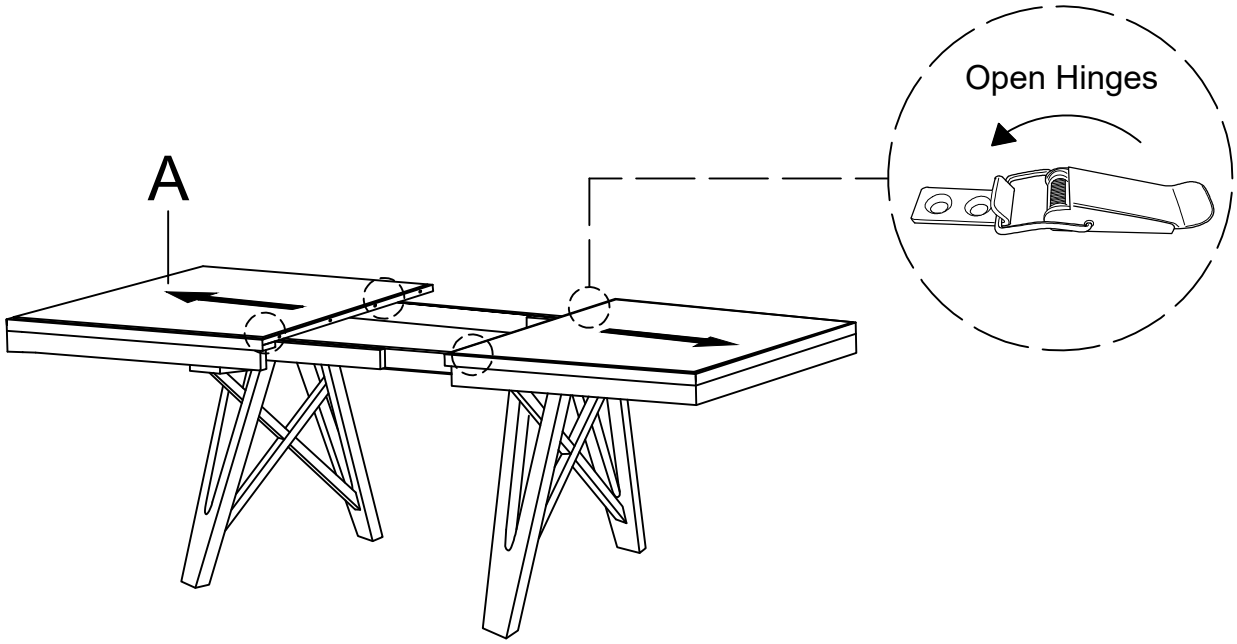

6 Insert the pins into the holes on the Table Leaf (B), attach the Table Leaf (B) to the Table Top (A), then push in the Table Top (A) and close the hinges.

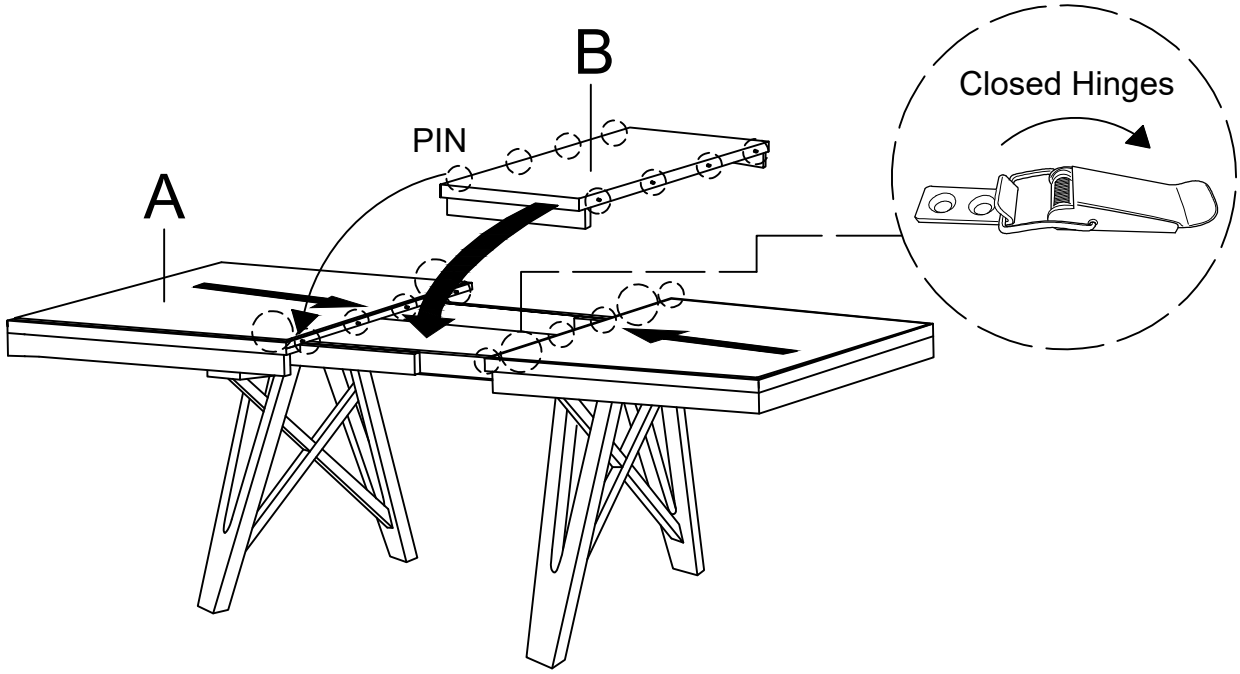

Cleaning & Care

Treat surfaces with care. Surfaces are resistant to scratches but are not scratch resistant. Clean surfaces with a dry or damp soft cloth. Do not use abrasive cleaners. Hardware may loosen over time. Periodically check that all connections are tight.