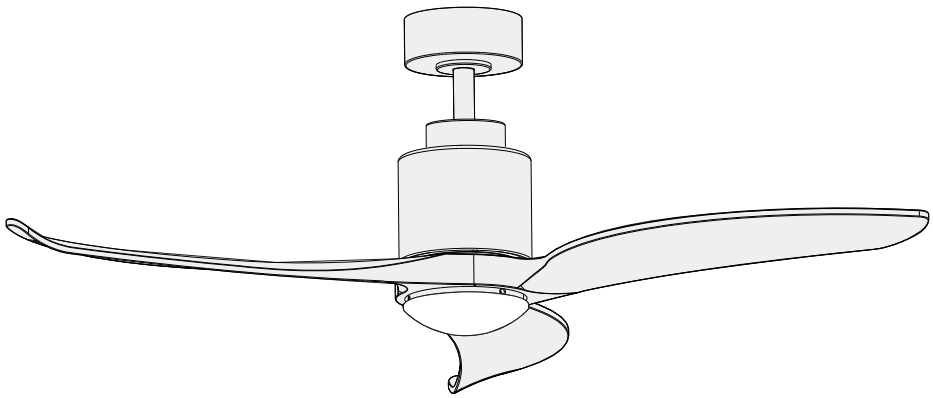

Ceiling Fan

Installation Instruction

SAFETY INFORMATION

Please read all safety information and instructions before installing the ceiling fan and save this manual for future reference.

SAFETY INFORMATION	01
PRE-INSTALLATION	02
INSTALLATION INSTRUCTION	04
OPERATION INSTRUCTION	08
SPECIFICATIONS	09
TROUBLESHOOTING	10

SAFETY INFORMATION

WARNING

- Before connecting the power supply, make sure that the power supply used matches the specifications of the ceiling fan.
- All wiring must comply with national and local electrical codes ANSI/NFPA70. If you are not familiar with wiring, please use a qualified electrician.
- To reduce the risk of fire or electric shock, turn off the power to the fuse box or circuit breaker before installing the fan.
- To reduce the risk of personal injury, attach the fan directly to the building's support structure and ensure that it can accept at least 35 pounds (15.9 kg).
- Make sure that the installation location allows the fan blades to rotate without obstacles.

Installation Location

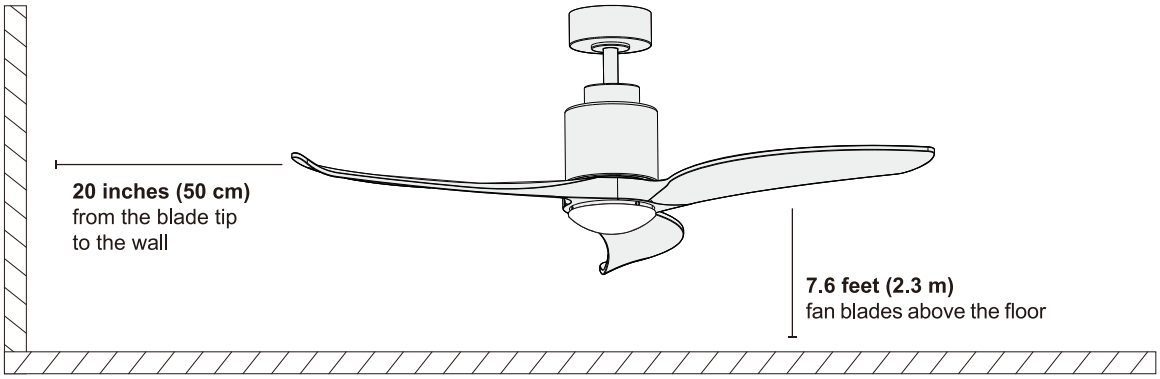

WARNING

- Do not install the fan with wet hands.
- Do not insert foreign objects between the rotating fan blades.
- Do not bend the fan blades when installing or cleaning the fan.
- Do not disassemble or modify this product or use non-original parts without permission.
- Keep children away from your working area.
- Properly dispose of the fan's packaging material.
- Make sure the ceiling fan is firmly secure to the ceiling. Double check all connections before you restore power.
- Turn off the fan and wait for the blades to stop completely before performing any maintenance or cleaning.

PRE-INSTALLATION

Tools Required (Not Included)


Power Drill

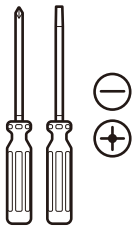
Screwdriver

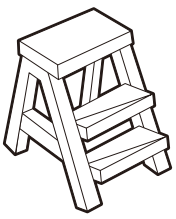
Step Ladder


Wire Stripper

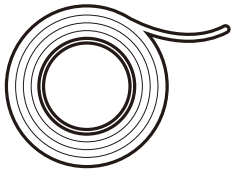
Electrical Tape

Parts List

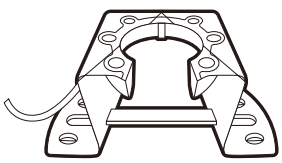
Mounting Bracket X 1

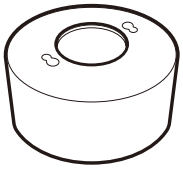
Canopy X 1

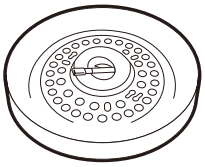
LED Board X 1

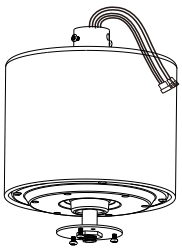
Motor X 1


Coupling Cover X 1

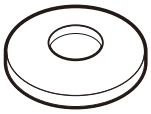
Canopy Cover X 1

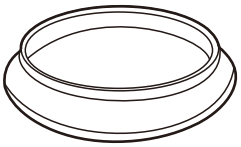
Light Cover X 1

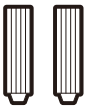
Aircraft Cap X 2

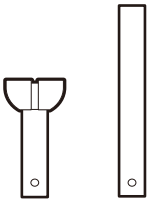
Downrod X 2


Remote Bracket Screw X 2

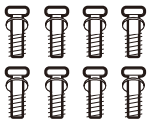
Blade Screw X 8

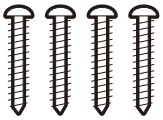
Self-tapping Screw X 4

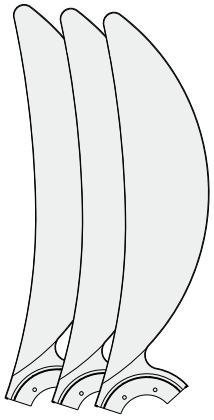
Fan Blade X 3


Wire Caps Screw Terminals X 3

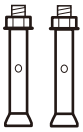
Expansion Bolt X 2

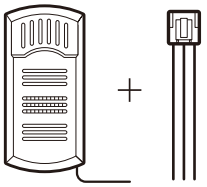
Receiver + Power cord X 1

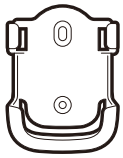
Remote Control Bracket X 1


Remote Control X 1

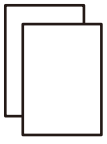
Balance Kit X 2

INSTALLATION INSTRUCTION

Step 1: Mounting Bracket Installation

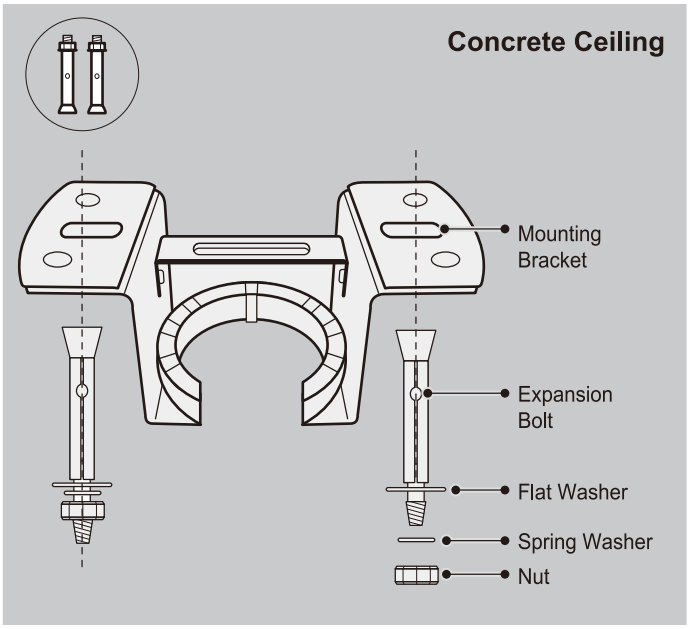

1. Drill holes with electric drill (φ8 mm).
2. Use expansion screws to fix the mounting bracket to the ceiling.

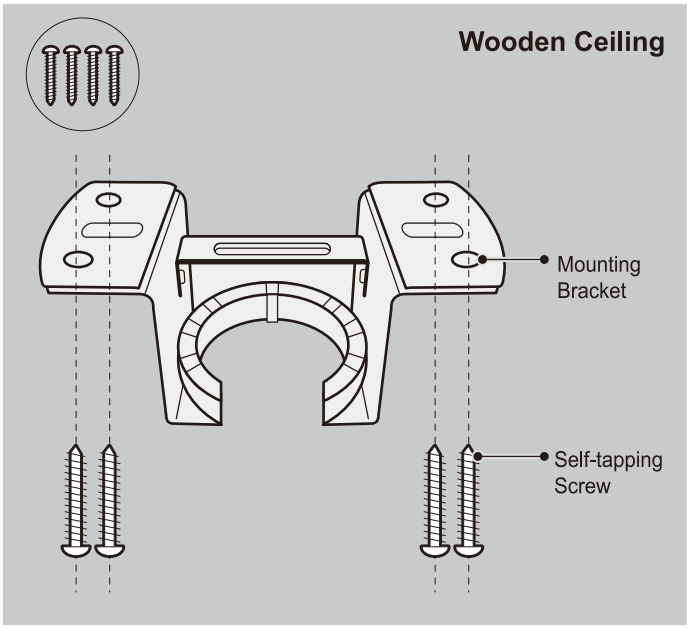

Fasten the mounting bracket to the ceiling with self-tapping screws.

Step 2: Fan Blade Installation

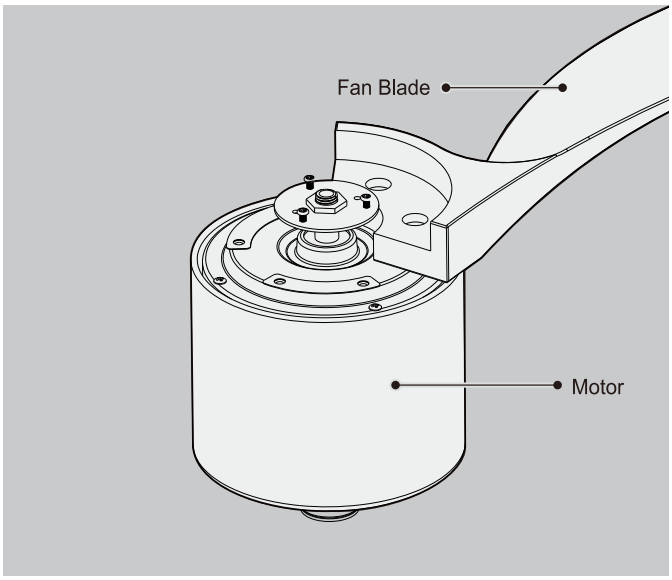

❶ Clamp the fan blade under the round cover and fix the fan blade to the motor with screws and gaskets.

Note:

- The fan blade needs to be aligned with the "center" position of the screw hole group.
- Do not lock the screws when installing the blades and then tighten all the screws after all the fan blades are installed.

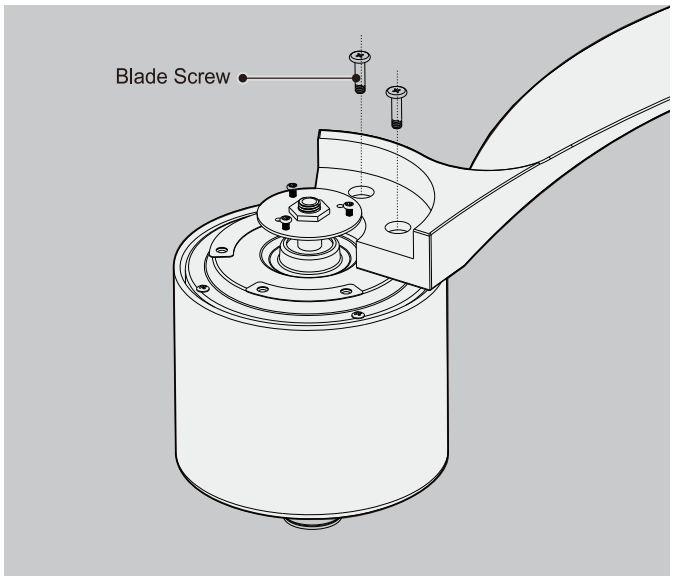

❷ Fasten the blades withscrews

Step 3: Installation of LED Board

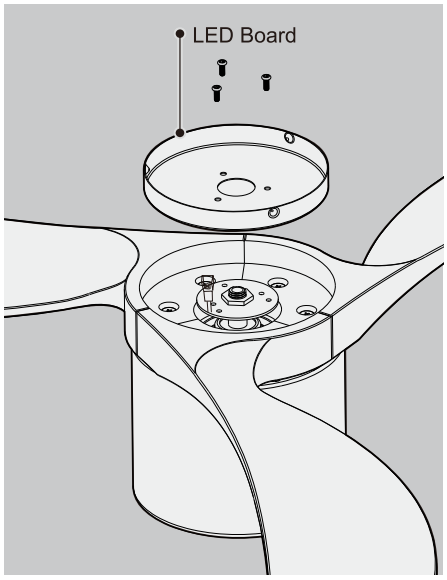

3 Thread the motor line through the LED board, then align the LED board with the round cover on the motor and put it on.

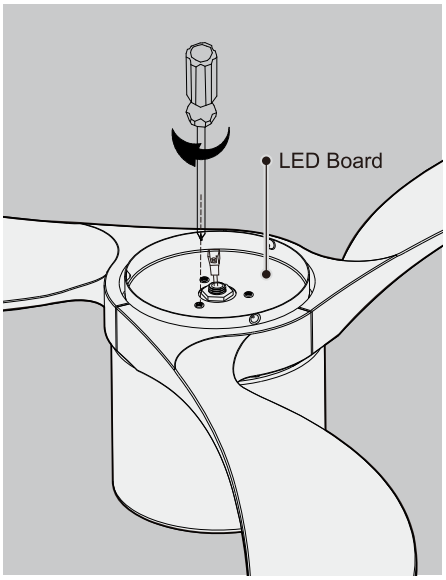

4 Install the screws on the round cover into the corresponding holes.

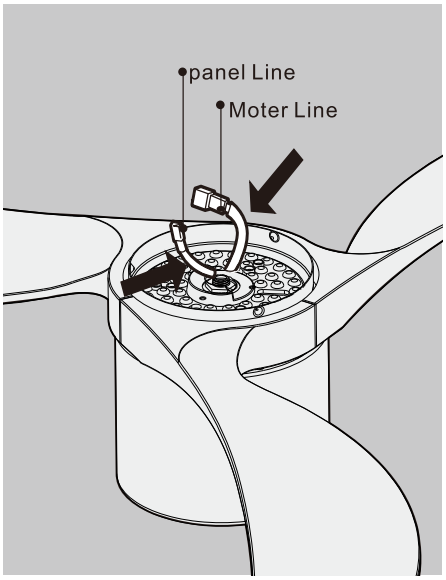

5 Connect the motor line and the lamp panel line.

Step 4: Downrod Installation

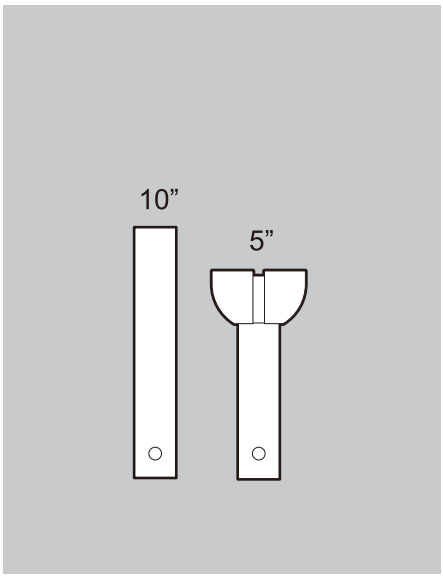

1 The height of the boom is 5"/10"/17"

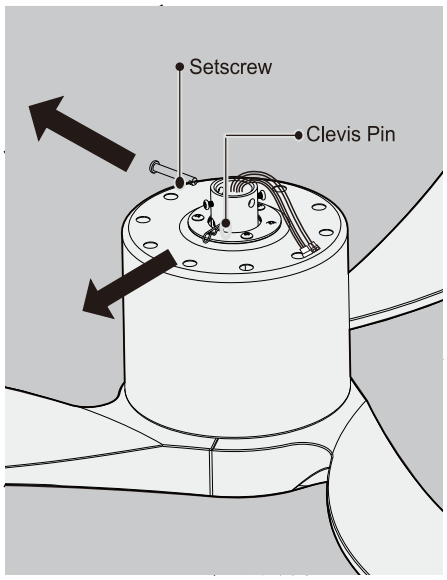

2 Take out clevis pin on the motor.

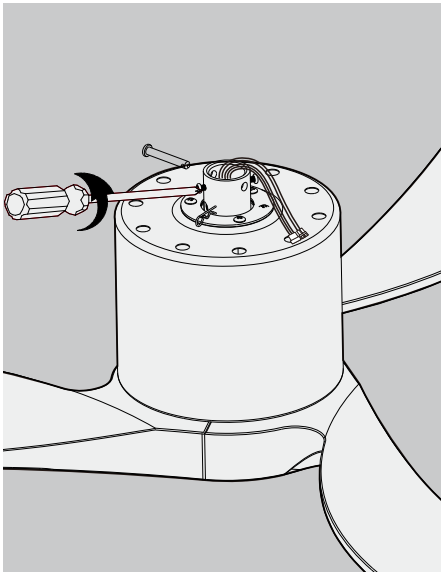

3 Loosen the screws on the motor, and do not take them out completely.

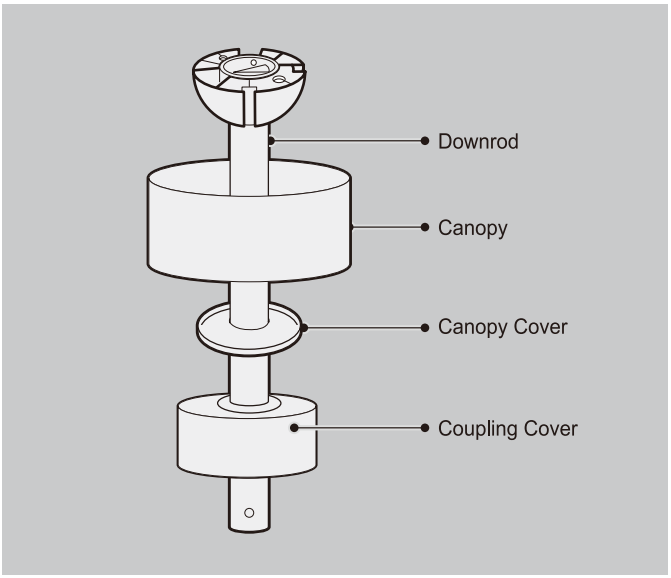

4 Assemble the canopy, canopy cover and coupling cover to the downrod in turn.

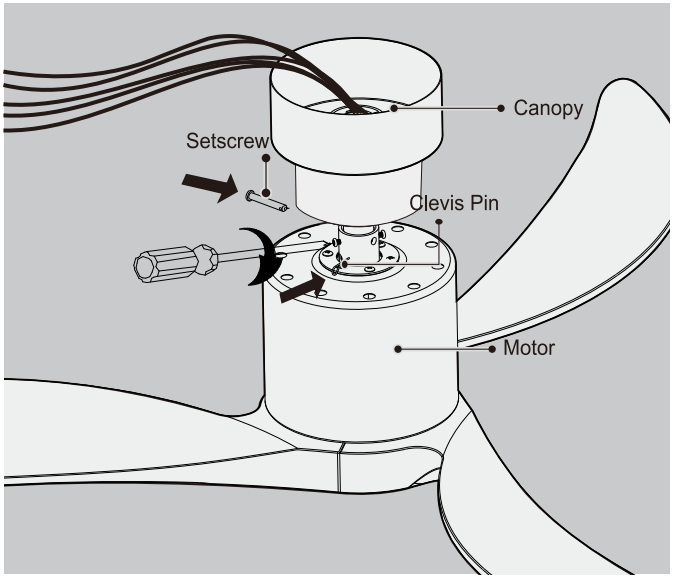

5 Thread the motor wire through the lower pull rod, lock the fixing screw with the clevis pin, and tighten the motor screw.

Step 5: Installation of the Assembled Fan

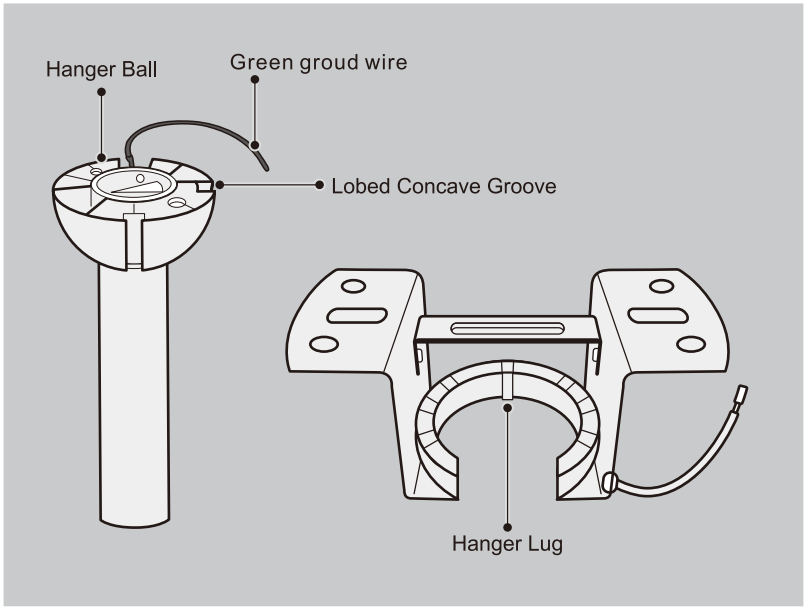

1 Lift the assembled fan onto the mounting bracket.

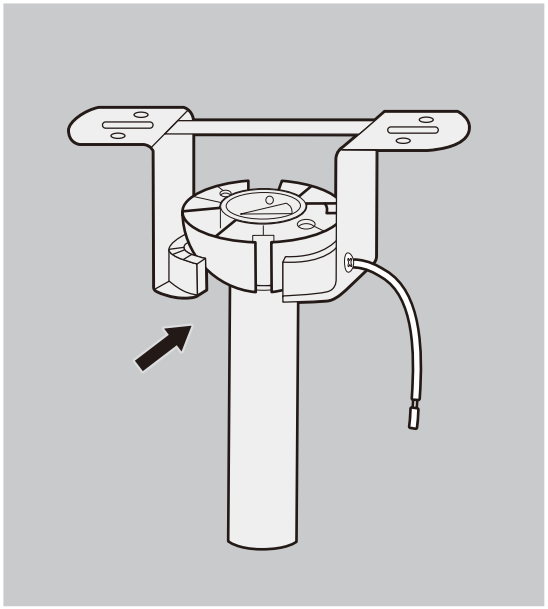

2 Ensure the concave groove of the hanger ball is positioned on the hanger lug of the mounting bracket.

Step 6: Wiring Instruction

1.INSTALLING RECEIVER IN CEILING FAN

A. Safety precautions:

⚠ WARNING: HIGH VOLTAGE! Disconnect power by removing fuse or switching off circuit breaker.
Electrical wire must meet all local and national electrical code requirements.

B. Electrical rating: 100v-240V 50/60Hz

2.Wiring diagram:

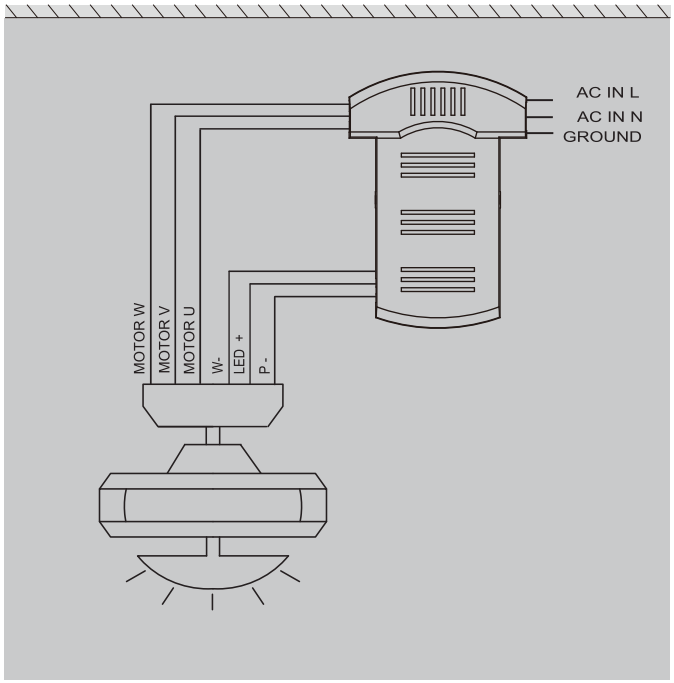

1 The receiver is connected to the motor power cord and the ceiling power cord respectively.

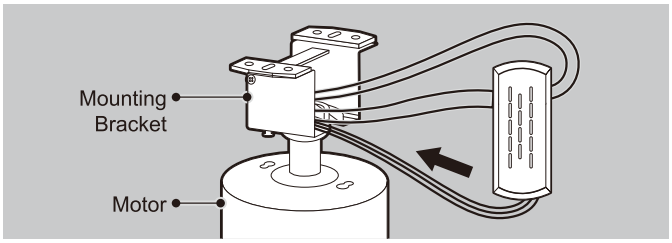

2 Put the receiver into the mounting bracket.

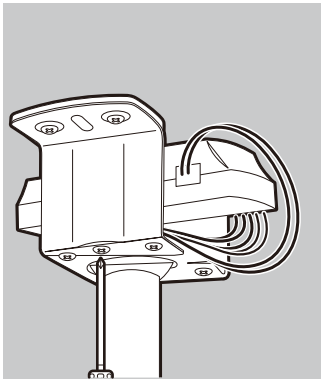

3 Cover the receiver and power cord and tighten the screws.

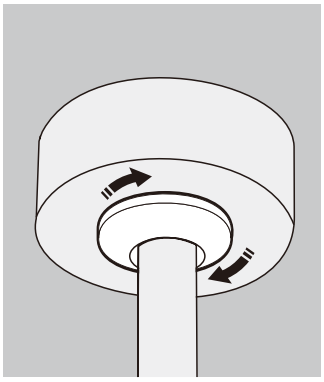

5 Decorative cover on, rotate, tighten

Note:
Connect wires color to color, plug to plug.

L Live Wire

N Neutral Wire

Ground Wire

Step 7: Install the Lampshade

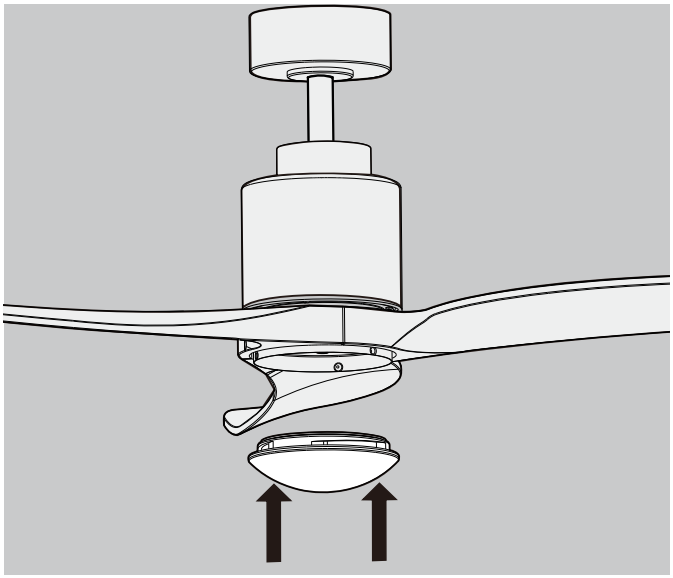

1 Put the light cover to the LED board.

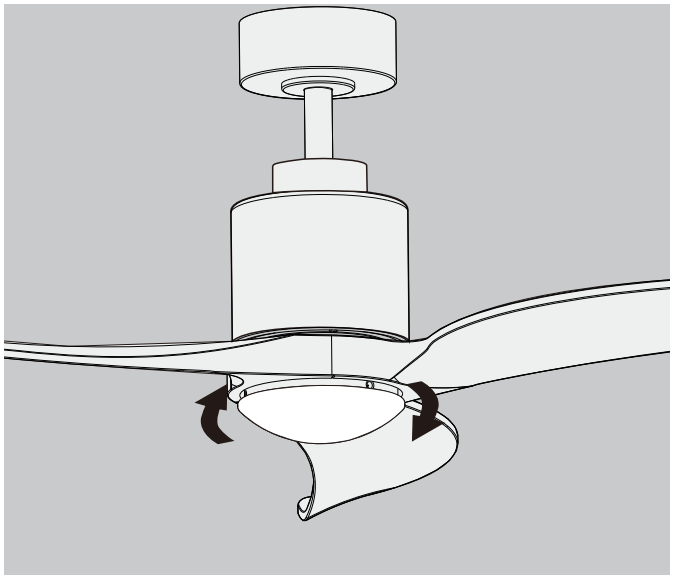

2 Spin forward to tighten the light cover.

Step 8: Change Downrod(OPT)

How to choose different lengths of downrod

1. The ceiling of the house is 100 inches from the ground, suitable for installing a 5-inch downrod.
2. The ceiling distance of the house is 110 inches, which is suitable for installing a 10-inch downrod.
3. The ceiling of the house is 120 inches from the ground, which is suitable for installing a 14-inch downrod.
4. If the space requires a longer boom, you will need to use a longer extension wire, the wire thickness should be selected close to the motor wire thickness, too thick or too thin (changing the resistance required by the receiver), the motor may not work.

NOTICE

If the house suitable for installing a 1.5m(590 inches), it should a new controller, Please contact us for customization

If you need to change different length downrod, please follow these steps:

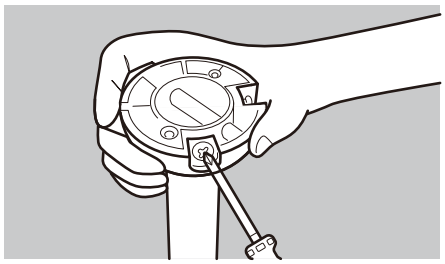

1 Loosen the screws on the hanging ball.

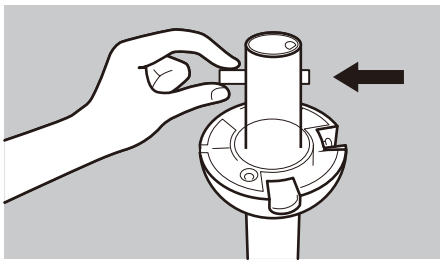

2 Remove the metal bar.

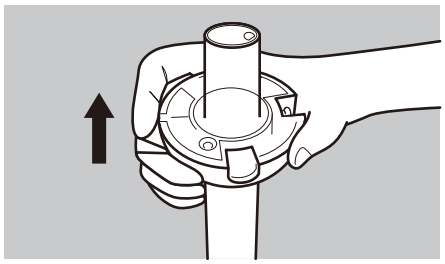

3 Take off the hanging ball from the original downrod.

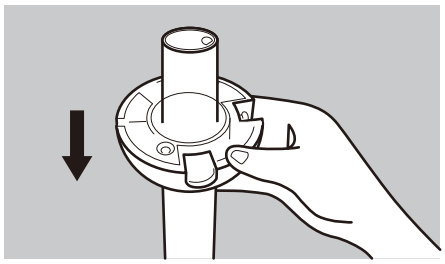

4 Install the hanging ball to an appropriate downrod.

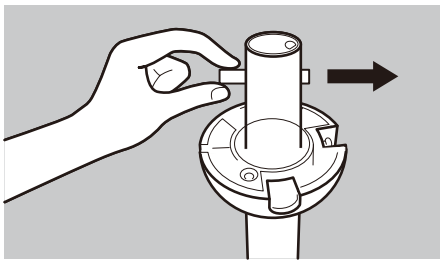

5 Insert the metal bar .

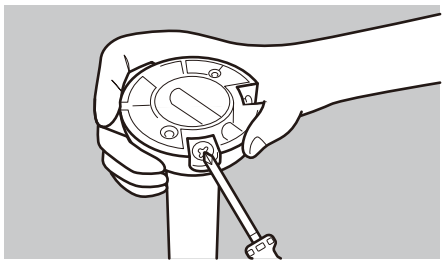

6 Tighten the screws.

OPERATION INSTRUCTION

Control Method

If the remote control loses contact with the controller, please operate as follows:

Remote Control

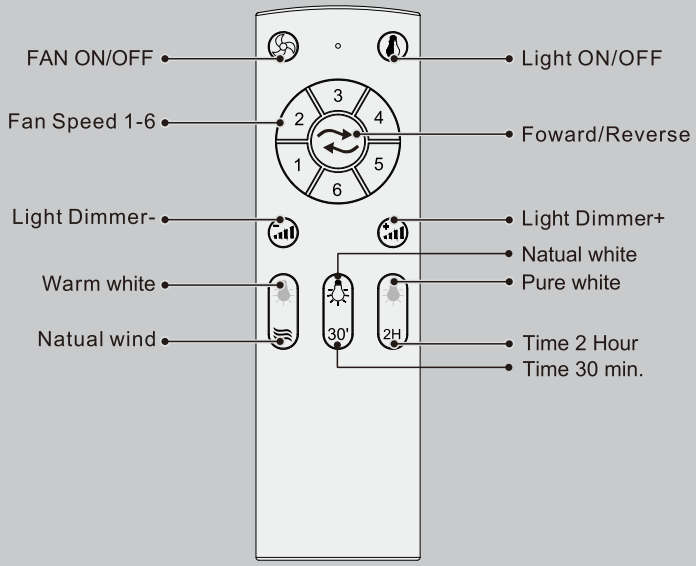

Setting the codes on the receiver:

Learning code matching mode is used between REMOTE CONTROL and receiver. Turn on the supply power within 5 seconds and press the REMOTE CONTROL"FAN ON/OFF" button for 3 seconds, it can load normally after hearing a long sound "bee", which means learning successfully and it can works normally.(PS: Learning mode is not accepted after turn "ON" the supply power for 5 seconds)

3 Light Temperature

Turn on the light,by pressing Warm/Natural/Cold Button to easily change the light temperatuer directly(6000K/4500K/3000K),and it will keep the last color for next turn-on.

Dimmable LED Light

For any of the 3 temperature light,you can always dim the light with remote,to find the most suitable brightness for your conformtable atmosphere.

Reversible DC Motor

By pressing the Reverse Button,the fan can blow upward/downward air,cooling the room in summer, airing the space in winter.

Note: Sensing Distance: 33 ft - 49 ft (10 m - 15 m) Diection of the fan / Reverse Switch

Reversible Function

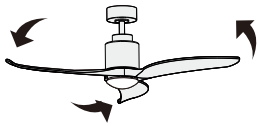

Summer (Forward):
A downward airflow creates a cooling effect.

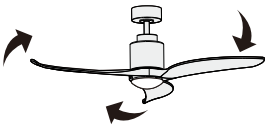

Winter (Reverse):
An upward airflow increases the indoor temperature.

PS: If you want to change the fan's rotation direction, please press the button while the fan is running.

Timing Control

1H: The fan will automatically shut off after 1 hour.
30': The fan will automatically shut off after 30 minutes
2H: The fan will automatically shut off after 2 hours.

Close the Timing Control: Press the button "FAN ON/OFF"

SPECIFICATIONS

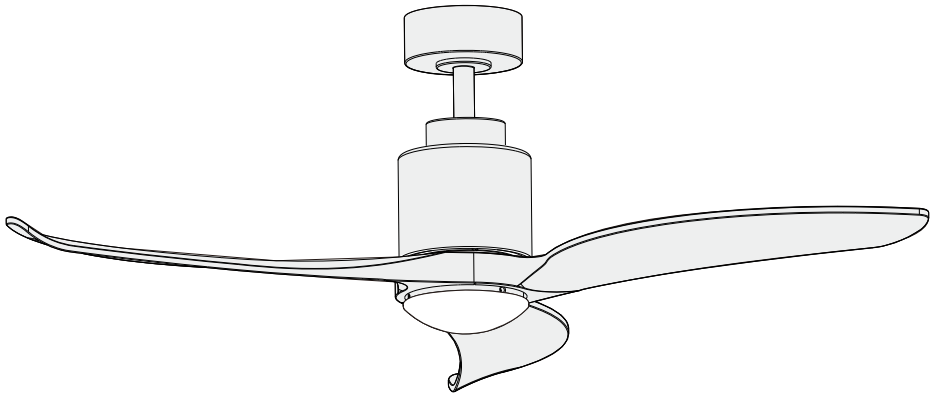

Product Name	Ceiling Fan	Gross Weight	6.66KG
Rated Voltage	100V-260V	lampshade size	ø175mm
Motor Power	35W	Motor Spec	ø153*12mm
control method	Remote Control	Overall height	381mm（with 5" rod）
Lamp configuration	18W LED	Fan blade	3 solid wood fan blades

TROUBLESHOOTING

If there is a problem with the fan during use, please check the following tips for solutions. If the problem still cannot be solved, please contact our after-sales team.

The Fan Dose Not Respond to the Remote Control.

- Check that all wire connections are correct and secure.
- Verify that the power is turned on and reaching the receiver.
- Verify that the batteries of the remote control are installed with the correct polarity, making sure to install the + (positive) end of the batteries on the solid end and the - (negative) end on the spring.

The Fan Makes a Humming Noise.

- Make sure the controls you use are supplied with your fan.
- Make sure all accessories are securely fastened. Loose parts often cause a vibrating noise or buzzing sound.
- Disassemble the fan and reinstalling it can sometimes remedy this resonant vibrating noise.

The Fan Makes a Repetitive Ticking Noise.

- Check for obstructions in the rotor path.
- Make sure mounting hardware at the ceiling is firmly fasten.
- Make sure all other hardware and blade attachments are tight.
- Give the fan a "Break in Period" of a few hours to a few days, then repeat the steps above.

The Fan Wobbles.

- Make sure the mounting plate and hardware at the ceiling are firmly fastened.
- Make sure all screw fittings on the fan are tight.
- If necessary, use the self-tapping screws provided to further secure the bracket to the joist.