Concord FL FPFB w/UBD

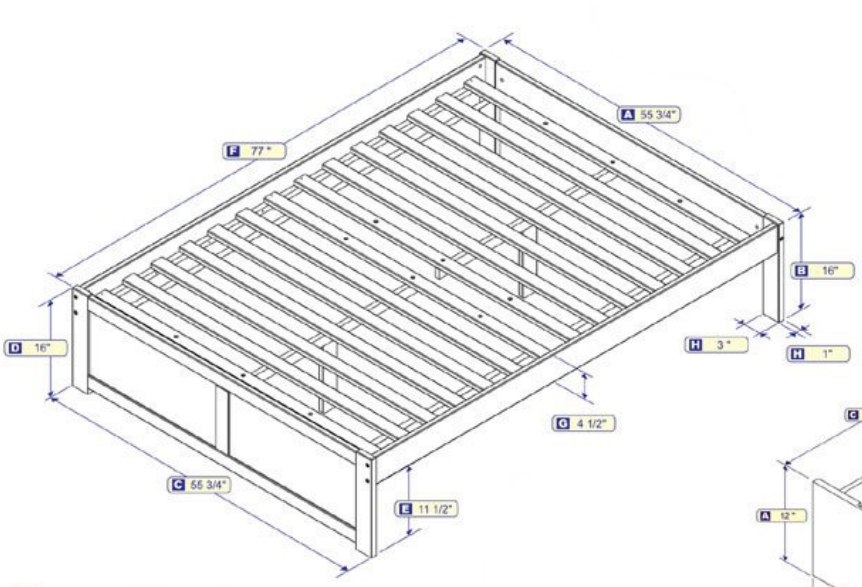

A HEADBOARD PANEL WIDTH
B HEADBOARD PANEL HEIGHT
C FOOTBOARD PANEL WIDTH
D FOOTBOARD PANEL HEIGHT
E DISTANCE BETWEEN LOWER RAIL AND FLOOR
F OVERALL LENGTH
G WIDTH OF RAIL
H WIDTH OF POST

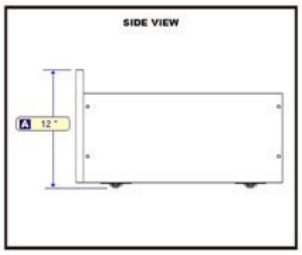

A OVERALL HEIGHT
B OVERALL WIDTH
C OVERALL DEPTH
D INSIDE LENGTH
E INSIDE WIDTH
F INSIDE DEPTH

