UNIVERSAL SOUND BAR MOUNT

SB200

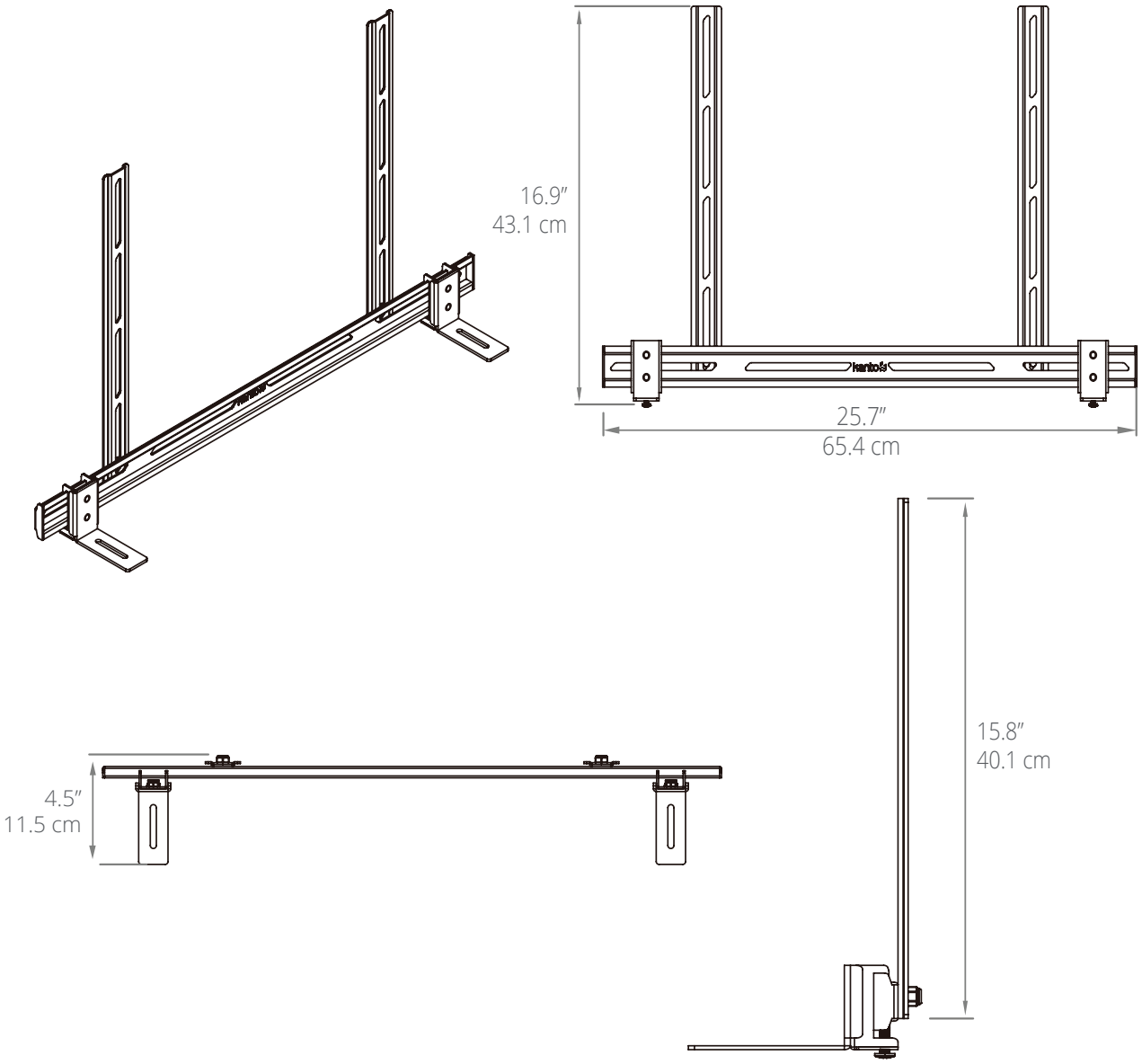

kanto
kantomounts.com