EUHOMY

Owner's Manual

Household Freezer

SKU : MCF-18H/MCF-28H

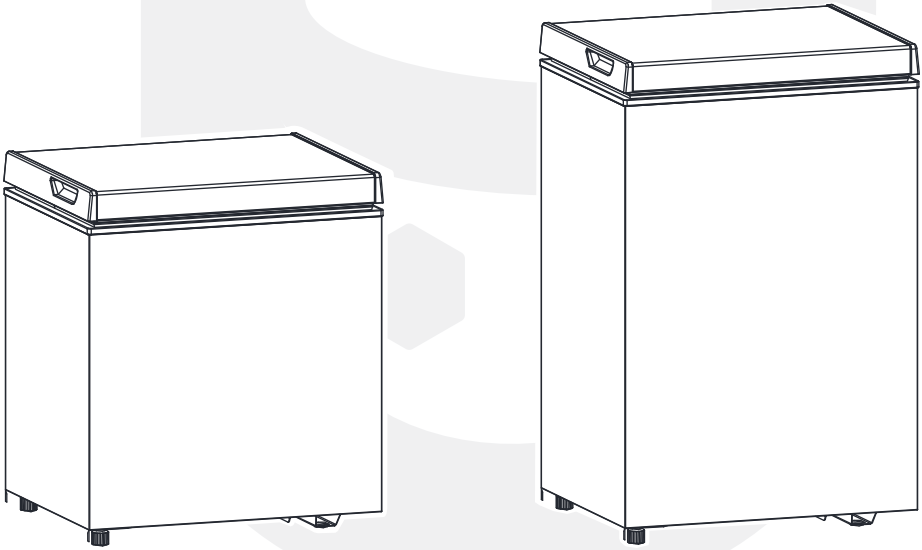

Email: support@euhomy.com

Facebook: @Euhomy.Official

Congratulations

Dear Customer:

Welcome to the Euhomy family. Thank you for purchasing one of our products.

Our goal is to provide you with superior service. If there is anything missing from or wrong with your order, or if you have any questions about using our ice maker, PLEASE contact us.

Email: support@euhomy.com
Facebook: @Euhomy.Official

The Euhomy team is available 24/7 to address your questions, comments, and concerns. Your satisfaction is our ultimate goal. We want to make everything right so you'll share your positive experience with other shoppers on Amazon.

If you experience any problems, please send an email to support@euhomy.com.

Our mission:
* To be the most trusted appliance brand.
* To create practical, compact appliances that better your life.

Be sure to register at

www.euhomy.com/register

for updates, warranty, and other relevant information.

Q&A

1.How often do I need to clean my ice maker?

Depending on your usage habits, if you use it frequently, it is recommended that you clean it at least once a week. Failure to clean the machine will cause scale accumulation, which will eventually block the pump and cause the product to fail to work.

2.How should I clean the machine?

It is recommended to use lemon water or weak acid vinegar for cleaning. Drain immediately after cleaning, and then clean it with pure water.

It is recommended to drain water at least once every three days. Draining can not only ensure that the hardness of the water is not too high, but also ensure that impurities can be discharged well, and it is not easy to produce scale in the water tank.

3.Why is my ice cube cloudy?

It means that your water quality is turbid. It is recommended to use drinking water and distilled water. If your water quality problem is serious, it is recommended that you install a water filter kit.

4.Can I put milk and juice into the water tank to make ice cubes?

It is recommended that you do not do that. Our research has found that the high concentration of milk and beverages can easily block the pump and reduce the life of the pump. At the same time, the protein in milk is prone to calcification, which chemically reacts with the PU water pipe inside the machine, which easily breaks it, making the product unable to continue working.

5.Why does my ice cube melt easily?

Because the ice maker is not a refrigerator, it does not have a heat preservation function. The high ambient temperature in summer will accelerate the melting of ice cubes. You can close the lid of the machine to keep the internal temperature. Some customers also put electric fans on the side of the machine to blow away the hot air around, thus solving the problem, you can try. However, if you are not using ice cubes for a long time, we recommend removing them from the ice basket and storing them in the refrigerator.

6.Why is my ice cube so thick and what should I do?

It may be that your ice making time is set too long, or it may be that the temperature of your environment is low. You can try to adjust the size of the ice cubes.

7.Why does the ice cube I made have a plastic smell?

The ice cube itself has no taste. If you feel there is a plastic smell, try to clean the inside of the machine with lemon water, then run a few cycles, and finally rinse with distilled water.

8.Why is there noise in the operation of my machine?

There is a faint sound when the machine is running. Closing the lid can reduce the noise. If the water pump makes noise during use, it is recommended to turn off the machine first, and then turn on the machine after cleaning the filter in the water tank to observe whether the noise disappears.

9.Why is water leaking from my machine?

It may be that the PUA tube inside the machine fell off during transportation. You can remove the back cover of the machine and connect it by yourself. If you don't know how to operate, please contact the Euhomy team. We will give you a professional video to help you solve the problem.

10.Why is there water flowing but not making ice?

If you make sure that the ambient temperature is not abnormal, then the refrigerant of the machine has leaked. Please provide a video or picture and send it to us, and the Euhomy team will help you.

Contents

PACKAGE CONTENT	02
IMPORTANT SAFEGUARDS	02–04
GETTING TO KNOW YOUR FREEZER	04
PREPARING YOUR FREEZER FOR USE	05–06
UNPACKING YOUR FREEZER	07–08
Connecting Your Freezer	08
TROUBLESHOOTING	09
TECHNICAL SPECIFICATIONS	10
WARRANTY	11

PACKAGE CONTENT

Freezer Unit	1 pc
Shelf	2 pcs
Owner's Manual	1 pc

IMPORTANT SAFEGUARDS

When using your FREEZER, basic safety precautions should be followed to reduce the risk of fire, electric shock, and injury to persons or property.
Read all instructions in this owner's manual carefully.
Use this appliance only for its intended purpose as described in this owner's manual.
WARNING:
– This appliance is intended to be used in households and similar applications such as
– staff kitchen areas in shops, offices, and other working environments;
– farmhouses, hotels, motels, and other residential-type environments;
– bed and breakfast type environments;
– catering and similar non-retail applications.

The appliance must be correctly installed and connected to a power supply according to the installation instructions before it is used. (See: "Preparing Your Freezer for Use").

The main power supply must be properly grounded.

The freezer must be positioned so that the plug is accessible.
Never unplug the unit often by pulling on the power cord. Always grasp the plug firmly and pull it straight out from the outlet.

Do not use an extension cord as it can negatively affect the performance of the unit.
If you must use an extension cord, use 18AWG minimum size and rated no less than 1875 watts.

When transporting the refrigerator, keep the unit in an upright position.
Do not tilt the appliance beyond 45° or place the unit upside-down. Do not tip over.

Do not touch the cold surfaces while the appliance is operating, especially not with wet hands, because your skin may stick to the surface.

It is recommended that the refrigerator be positioned away from any combustible source such as gas, petrol, alcohol, lacquer, or oil.
The aforementioned objects should not be stored in the refrigerator under any circumstances.

If the unit fails to cool properly, dispose of spoiled food as needed.

Unplug your freezer before cleaning or making any repairs.
NOTE: If for any reason this product requires maintenance, we strongly recommend that a certified technician perform the service.

IMPORTANT SAFEGUARDS

Do not defrost the appliance with an electric device (hair dryer, etc.) and never scrape the ice or frost layer with a sharp tool.
Warning: Do not damage the refrigerant circuit.

The rating plate is inside the appliance or outside on the rear or side wall.

This appliance is not intended for use by persons (including children) with reduced physical, sensory, or mental capabilities or lack of experience and knowledge unless they have been given supervision or instruction concerning the use of the appliance by a person responsible for their safety.
Children should be supervised to ensure that they do not play with the appliance.

CAUTION: To prevent A Child from Being Entrapped, Keep Out of Reach of Children, and Not in The Vicinity of the Freezer.

Do not run cord over carpeting or other heat insulators.
Do not cover the cord. Keep cord away from traffic areas, and do not submerge in water.
If the supply cord is damaged, it must be replaced by the manufacturer or its service agent or a similarly qualified person in order to avoid a hazard.
Repair or replace immediately all electric service cords that have become frayed or otherwise damaged.
Do not use a cord that shows cracks or abrasion damage along its length, the plug, or the connector end.

WARNING: Keep ventilation openings in the appliance enclosure or in the built-in structure clear of obstruction.

WARNING: Do not use mechanical devices or other means to accelerate defrosting, other than those recommended by the manufacturer.

WARNING: Do not damage the refrigerant circuit.

WARNING: Do not use electrical appliances inside the food storage compartments of the appliance, unless they are of the type recommended by the manufacturer.

Do not operate your refrigerator in the presence of explosive fumes. ☒☒WARNING--Do not use a flame or set a fire near the unit.

DANGER-Risk of Fire or Explosion. FLAMMABLE REFRIGERANT Used. Do Not Use Mechanical Device to Defrost the Refrigerator. Do Not Puncture the Refrigerant Tubing.

DANGER-Risk of Fire or Explosion. Flammable Refrigerant Used. To Be Repaired Only by Trained Service Personnel. Do Not Puncture Refrigerant Tubing.

CAUTION – Risk of Fire or Explosion. Flammable Refrigerant Used. Consult Repair Manual/Owner's Guide Before Attempting to Service This Product. All Safety Precautions Must be Followed.

IMPORTANT SAFEGUARDS

CAUTION--Risk of Fire or Explosion. Dispose Of Property in Accordance with Federal or Local Regulations. Flammable Refrigerant Used.

CAUTION – Risk of Fire or Explosion Due to Puncture of the Refrigerant Tubing; Follow Handling Instructions Carefully. Flammable Refrigerant Used.

Disposal of your unit

	Warning: Risk of fire / flammable materials

Please comply with local regulations for disposal of the appliance due to its flammable refrigerant and aerosol gas. Before you scrap the appliance, please take off the doors to prevent children being trapped.

DANGER: Risk of child entrapment. Before you throw away your old refrigerator or freezer:
Take off the doors.
Leave the shelves in place so that children may not easily climb inside.

GETTING TO KNOW YOUR FREEZER

(1) Indicator Light

(2) Thermostat Dial

(3) Thermostat Box

(4) Adjustable foot

(5) Drain port
(bottom, not shown)

(6) Cabinet

(7) Basket shelf

(8) Door

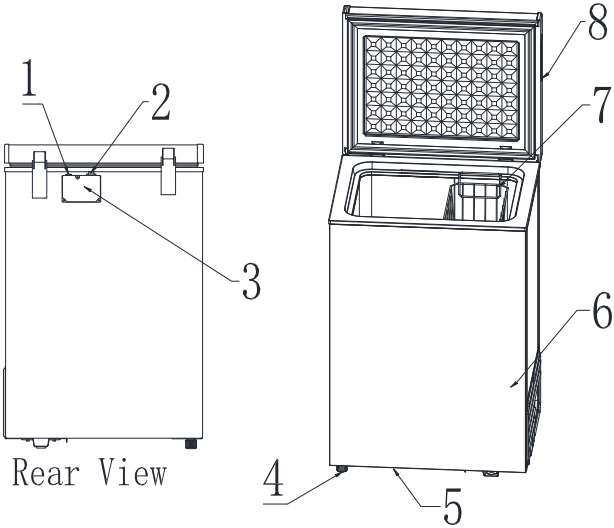

EUHOMY
Live the cool life

PREPARING YOUR FREEZER FOR USE

Unpacking your Freezer

(1)Remove the exterior and interior packaging without tilting or laying the freezer on its side.

(2)To clean the inside of the freezer, use a soft cloth and lukewarm water with a mild detergent, and then dry it thoroughly prior to use. See Cleaning Your Freezer.

(3)Free-standing installation only.
Find a location for your unit that is protected from direct sunlight and other sources of heat.
Place the unit on a level surface.
Make sure that there is at least 5 inches of space between each side of your unit and the wall.
Avoid locating the appliance in a damp area.
Too much moisture in the air will cause condensation to form, requiring more frequent defrosting of the unit.

(4)Allow 4 hours for the refrigerant fluid to settle before plugging in the freezer.

(5)The refrigeration system of the cabinet is designed to operate with the cabinet located on a flat surface. Avoid tilting the cabinet.

Connecting Your Freezer

Improper use of the grounded plug can result in the risk of electrical shock.

This unit should be properly grounded for your safety.
The power cord is equipped with a three-prong plug which mates with standard three-prong wall outlets to minimize the possibility of electrical shock.

Plug your appliance into an exclusive, properly installed, grounded wall outlet. Do not under any circumstances cut or remove the third (ground) prong from the power cord.
Any questions concerning power and or grounding should be directed to a certified electrician.

This appliance requires a standard 115volt, 60Hz electrical outlet with three-prong ground.
Always use ground fault protection where required by the electrical code.

Temperature Control

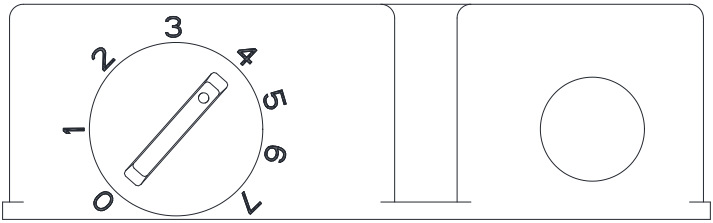

PREPARING YOUR FREEZER FOR USE

(1) The temperature control dial is located at the back of the cabinet.
The range of the temperature control is from position "1" (warmest) to "7" (coldest).
Adjust the temperature control to the setting that best suits your needs.
The recommended control setting is near the 4 position, which should be appropriate for home or office refrigerator use.
The first time you turn the unit on, adjust the temperature control dial to "7" and run for at least 2 hours before putting food in the unit.
This will ensure the cabinet is thoroughly chilled before food is added.

(2) Turning the temperature control dial to the "0" position until it clicks will switch off the power to the compressor.
IMPORTANT: Turning the control dial to the "0" position turns off the cooling function; It does NOT disconnect the unit from the power supply.

(3) To adjust the thermostat control dial: turn the control to a higher number for colder temperatures, a lower number for less cold temperatures.
It is recommended that you adjust the temperature by one numerical increment at a time, allowing several hours for temperatures to stabilize between increments

Cool Down Period : To ensure proper food storage, allow 4 hours for the freezer to cool down completely.
The freezer will run continuously for the first several hours.
Frozen foods may be added after the first few hours of operation, but you must wait 4 hours before storing any fresh food.

IMPORTANT : The storage life of frozen foods varies, and the recommended storage times should not be exceeded.
Place frozen food in the freezer as quickly as possible after purchase.
If there are instructions on the package, carefully follow these instructions regarding storage.

Notes :
Do not store canned food or food in glass containers in the freezer compartment.

Moving Your Freezer

Remove all contents and make sure to tape down any loose items.
To avoid damaging the leveling screws, turn them all the way into the base.
Tape the door shut.
Make sure your unit stays in the upright position during transportation.

Defrosting Your Freezer

After you have used your freezer for some time, frost will accumulate inside, mostly on the upper part of the food liner.
This is due to warm, moist air entering the freezer when the door is open, which is normal.
If the frost is thicker than 1/4", it should be removed as the freezer will be less energy efficient.
Under normal circumstances, defrosting will not be necessary more than once a year.
To defrost your freezer properly, follow these instructions:

(1) Unplug freezer.

(2) Quickly remove all frozen food and store it in bins, cartons, or other suitable containers. Keep the food well covered with a blanket or towels to avoid excessive warming.

(3) Place pans of hot water in the freezer with the lid open to speed melting.

(4) Using a wooden spatula or plastic scraper, remove the frost and ice from the inner liner walls as soon as it becomes loose (approximately 15 minutes from the start).
WARNING: Do not use a mechanical device to defrost your freezer. Do not puncture refrigerant tubing.

(5) A cloth or towel soaked in hot water will help speed up the process.
Remove the ice from the freezer as soon as it loosens; allowing it to melt completely will only make cleaning more difficult.

(6) You are now ready to clean your freezer.

Please Note : Do not pour boiling water in the unit to defrost it; this avoids damaging the plastic parts. In addition, never use a sharp or metallic instrument to remove frost as it may damage the inner liner or the cooling coils, voiding any and/or all warranties which may be in effect.

Cleaning Your Freezer

WARNING:
– Do not clean your freezer with flammable fluids.
  The fumes can create a fire hazard or explosion.

– Unplug your freezer before cleaning or making any repairs.

(1) Turn the temperature control to "0", unplug the unit, and remove all the food and shelves.

(2) Cleaning the Inside:
We recommend the following cleaning method: sprinkle baking soda on the sides and bottom of the freezer, this will help in cleaning and odor removal.
In order to retain the finish of the freezer cabinet, inside and outside, wash painted and plastic parts only with warm water and mild soap, then rinse and dry.
Do not use, under any circumstances, a gritty soap or a scouring pad as they will scratch the finish.
During defrosting, some water may have dripped from the back flange of the lid cover.
This is quite normal. Ice builds on the lid insulation during normal operation, and the ice will melt during defrosting.
You will probably have to fold over and dry the gasket on the hinge side of the lid to complete the cleaning process.

(3) Cleaning the Outside:
Wash the cabinet with warm water and mild liquid detergent.
Rinse well and wipe dry with a clean soft cloth.

(4) Wash the shelves with a mild detergent solution.

(5) Make sure the door gasket (seal) is kept clean in order to keep the unit running efficiently.

TROUBLESHOOTING

Freezer does not work	1. It may not be plugged in well. 2. The circuit breaker has tripped, or the main fuse may be blown. 3. The thermostat may be set to "0".
The compressor turns on and off frequently	1. The room temperature is higher than usual. 2. The freezer is filled to its maximum capacity. 3. The door is opened too often. 4. The door is not closed completely. 5. The thermostat dial is set too low. 6. The door's magnetic gasket does not seal properly.
Vibrations	1. The freezer may not be leveled properly.
The unit makes too much noise	1. Low noise may come from the flow of the refrigerant, during the refrigeration cycle, which is normal. 2. As each cycle ends, gurgling sounds caused by the flow of refrigerant in your freezer are normal. 3. Contraction and expansion of the inside walls may cause popping and crackling noises. 4. The freezer is not level.
The door will not close properly	1. The unit is not level. 2. The gasket is dirty. 3. The shelves are out of position. 4. Too much ice or frost accumulated.

TECHNICAL SPECIFICATIONS

Model	MCF-18H	MCF-28H
Power Supply	115V~ 60Hz	115V~ 60Hz
Rating	0.9 A	0.9 A
Capacity	50 L/1.8 Cu. Ft	78 L/2.8 Cu. Ft
Dimensions	W525*D445*H600 (mm)	W525*D445*H810 (mm)
Refrigerant	R600a, 1.09 Oz/31g	R600a, 1.52 Oz/43g

WARRANTY

Euhomy offers a limited 1-year warranty ("warranty period") on all of our products purchased new and unused from Euhomy company, with an original proof of purchase and where a defect has arisen, wholly or substantially, as a result of faulty manufacture, parts or workmanship during the warranty period. The warranty does not apply where damage is caused by other factors, including without limitation:

(a)normal wear and tear;
(b)abuse, mishandling, accident, or failure to follow operating instructions;
(c)exposure to liquid or infiltration of foreign particles;
(d)servicing or modifications of the product other than by Euhomy;
(e)commercial or non-household use.

The Euhomy warranty covers all costs related to restoring the proven defective product through repair or replacement of any defective part and necessary labor so that it conforms to its original specifications. A replacement product may be provided instead of repairing a defective product. Euhomy's exclusive obligation under this warranty is limited to such repair or replacement. A receipt indicating the purchase date is required for any claim, so please keep all receipts in a safe place. Although greatly appreciated, the product registration is not required to activate any warranty and product registration does not eliminate the need for the original proof of purchase. The warranty becomes void if attempts at repair are made by non-authorized third parties and/or if spare parts, other than those provided by Euhomy, are used.

You may also arrange for service after the warranty expires at an additional cost. These are our general terms for warranty service, but we always urge our customers to reach out to us with any issue, regardless of warranty terms. If you have an issue with a Euhomy product, please contact us (supportl@euhomy.com), and we will do our best to resolve it for you.

EUHOMY

Refresh Every Moment!

Social Media

Recipe For You

TROUBLESHOOTING TABLE

The following table help you to check your machine if it does not operate correctly.
If you can not identify / remedy the problem,
please email **EUHOMY** at **support@euhomy.com**