Wardrobe

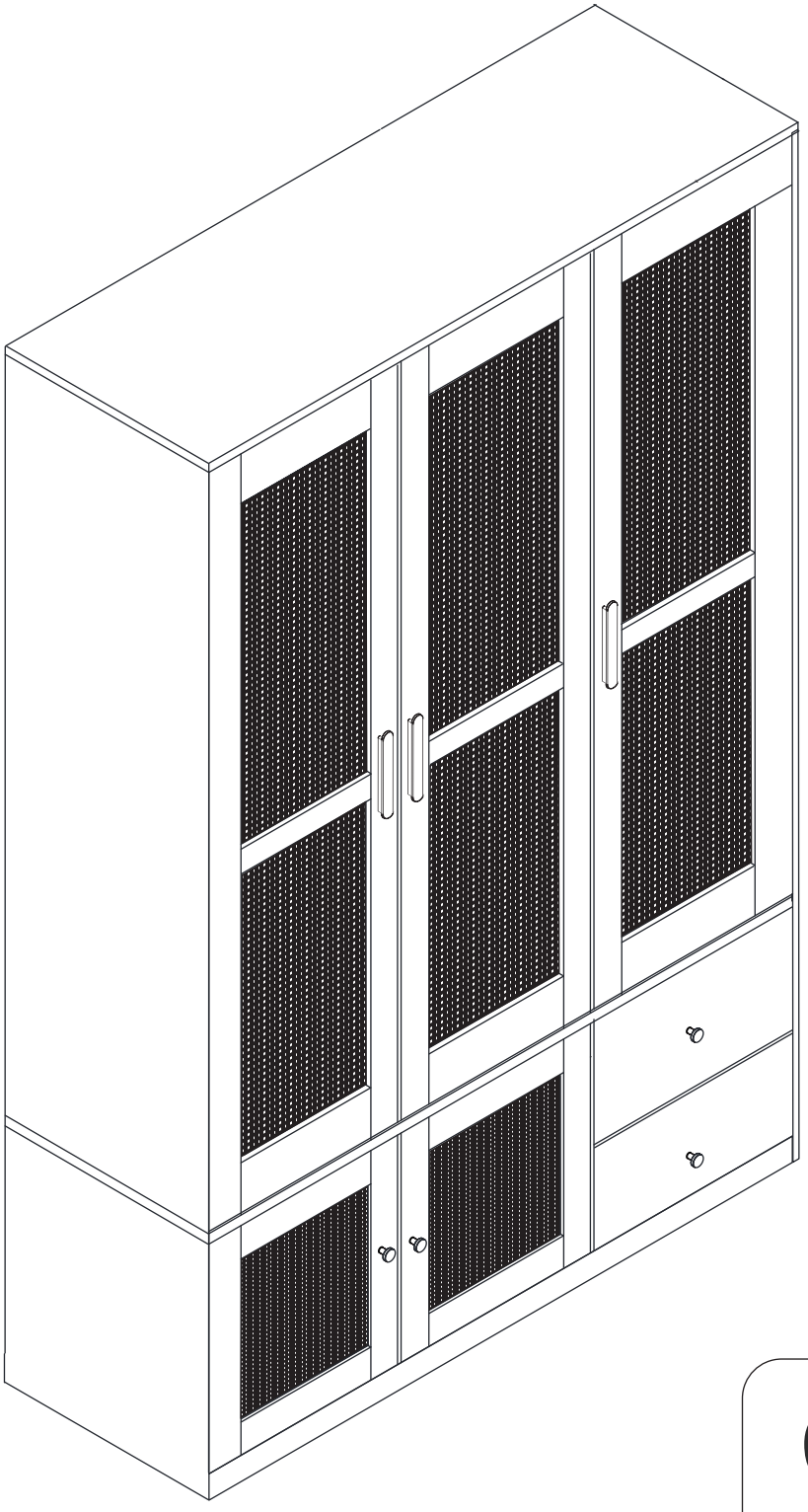

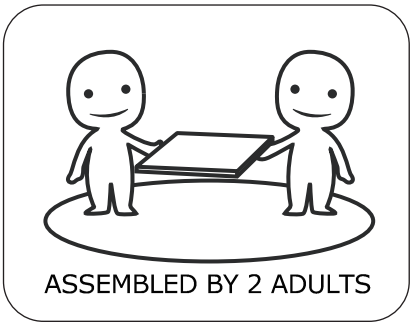

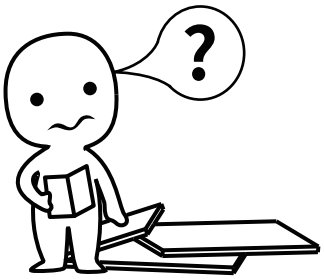

IMPORTANT INFORMATION!

please read the entire manual before starting to assemble and/or using this product.follow the manual thoroughly and keep it for further reference.

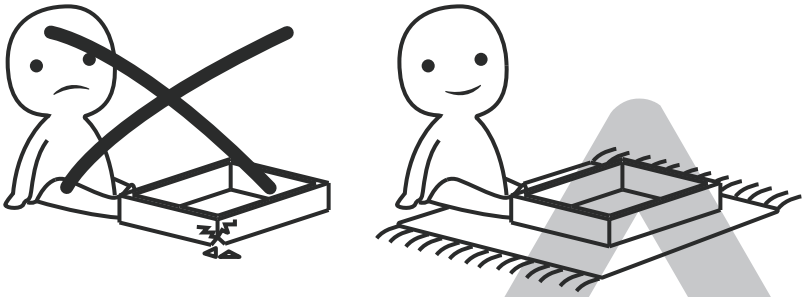

AVOID SCRATCHES!

In order to avoid scratching this furnuture should be assembled on a soft layer-could be a rug.

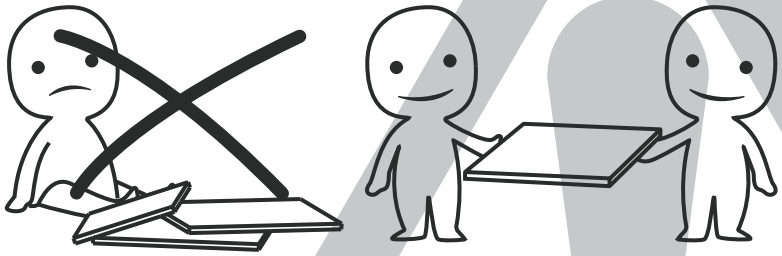

IMPROVE EFFICIENCY !

Try to find a partner to install with you, which can speed up the installation efficiency and shorten the time.

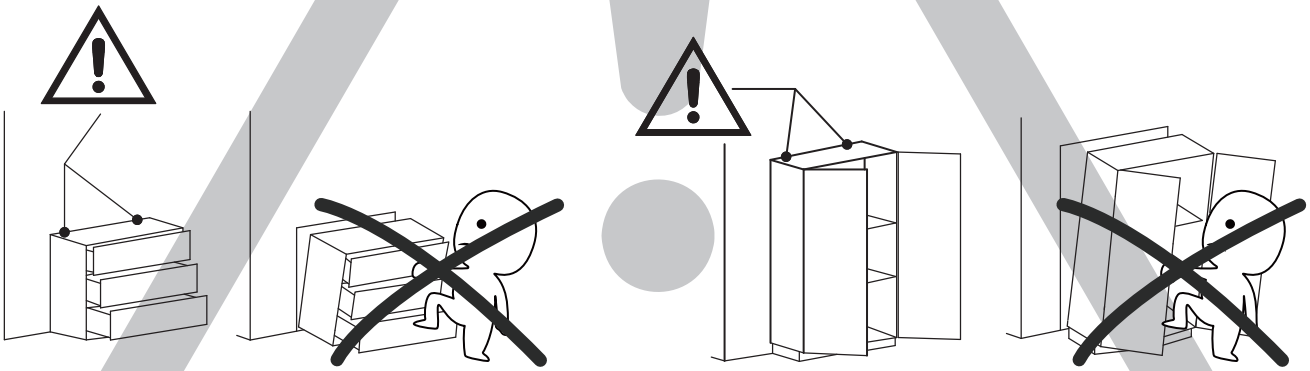

ANTI-TOPPLE WARNING !

Overturned furniture can cause serious or fatal crush injuries. To prevent tipping over, be sure to use the wall attachment, if not included with this product. Please purchase the wall attachment that fit your wall. If unsure, seek professional advice. Please read and follow each step of the instructions carefully.

IMPORTANT !

It is important that any product which is assembled using any kind of screw is re-tightened 2 weeks after assembly,and once every 3 months - in order to assure stability through-out the lifespan of the product.

For regular maintenance and cleaning of the product, for the frame, please use a rag dipped in neutral detergent to fully wipe it, and then dry it with a clean rag.For glass materials, wipe with a rag dampened with water glass cleaner, and then dry with a dry rag.

Do not use an electric screwdriver, and do not use too much force when installing, because the board is easy to break.

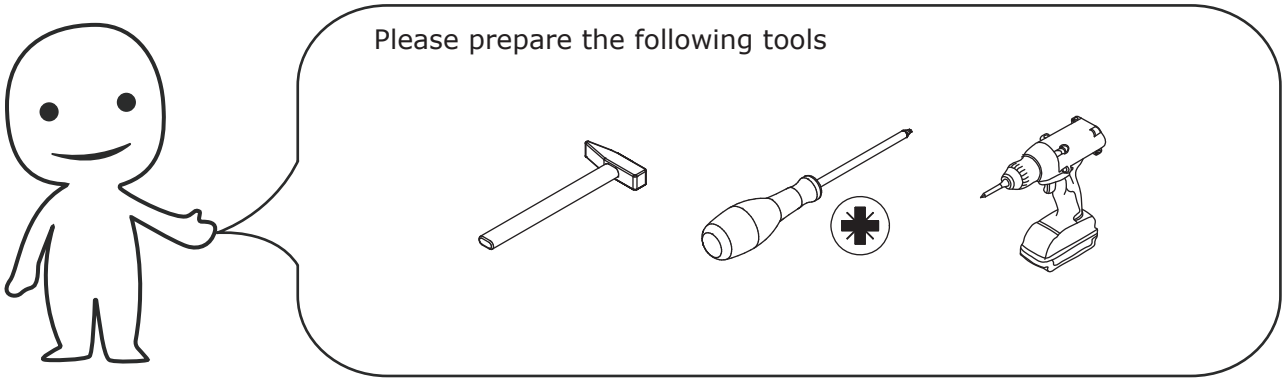



When installing, please carefully confirm whether each screw corresponds to the manual, accessories with similar shapes can be distinguished by size

A x 72+5	B x 72+5	C x 46+4	D x 2
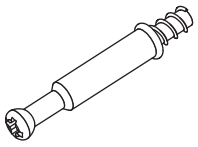		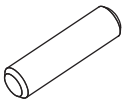	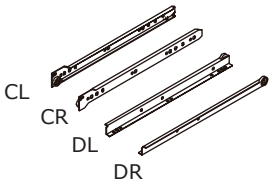
∅6 x 35 mm	∅15 x 11 mm	∅8 x 30 mm	L=350 mm

E x 16+1	F x 2	G x 5	H x 8
	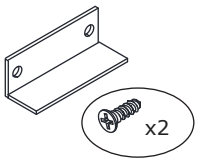		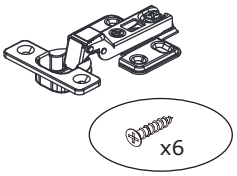
∅3 x 12 mm	∅3 x 12 mm	∅4 x 30 mm	∅3.5 x 14 mm

J x 4	L x 72+5	M x 1	N x 1
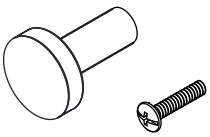	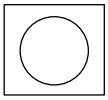	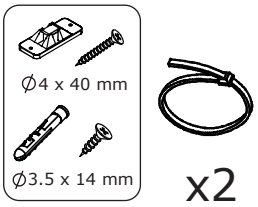	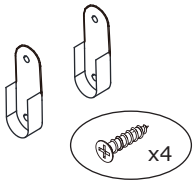
∅4 x 22 mm			∅3.5 x 14 mm

P x 29	Q x 3	R x 11+2	S x 5
	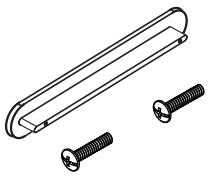	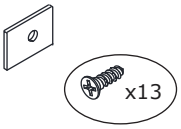	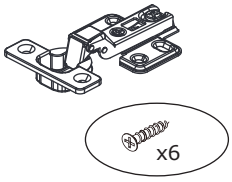
∅3 x 12 mm	∅4 x 18 mm	∅3 x 12 mm	∅3.5 x 14 mm

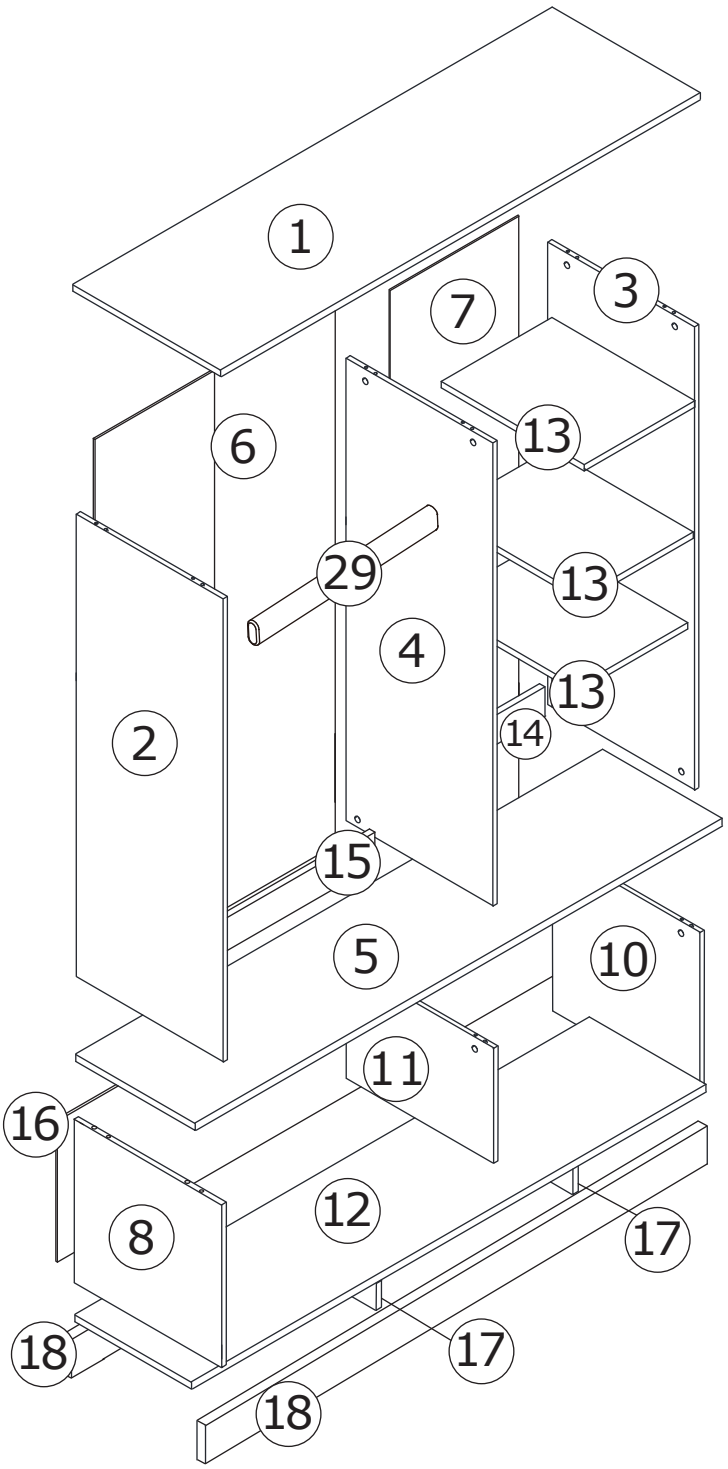

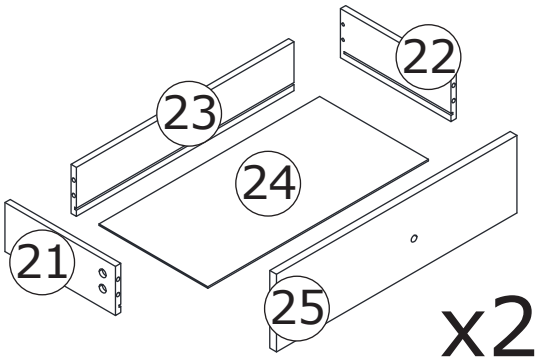

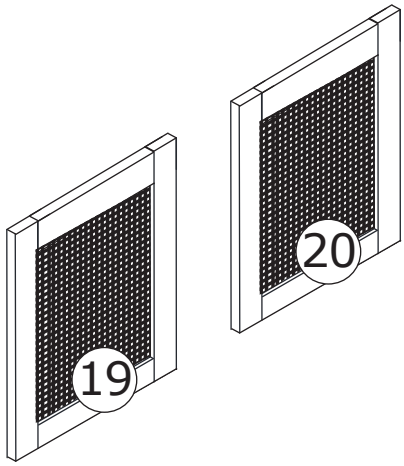

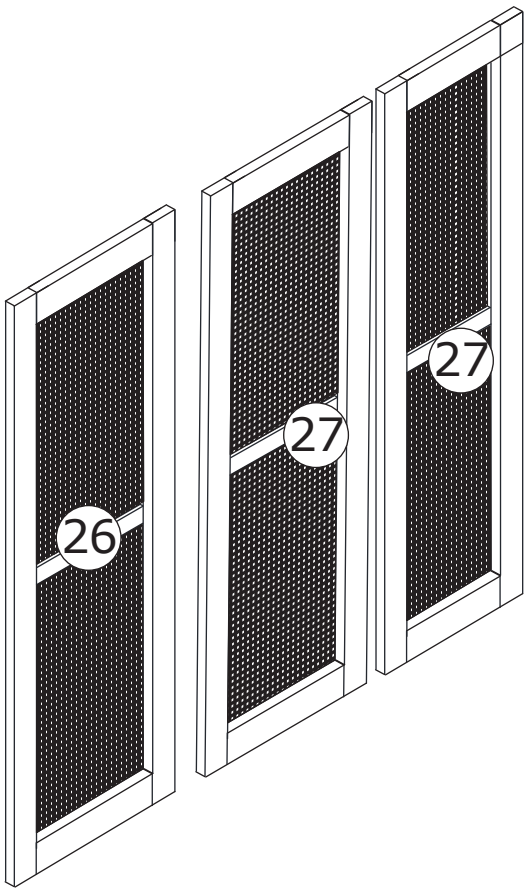

⚠WARNING





Children have died from furniture tipover.To reduce the risk of furniture tipover:

- ALWAYS install tipover restraint provided.
- NEVER put a TV on this product.
- NEVER allow children to stand,climb or hang on drawers,doors,or shelves.
- NEVER open more than one drawer at a time.
- Place heaviest items in the lowest drawers.

This is a permanent label.
Do not remove!

1

A x 4

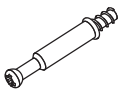

∅6 x 35 mm

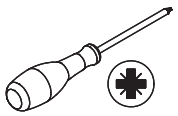

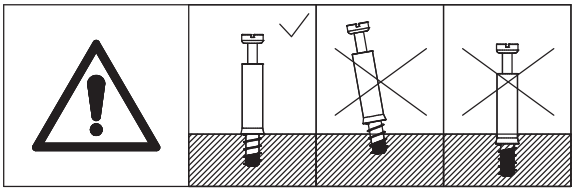

Screw eccentric rod(A) into board 18 at first.

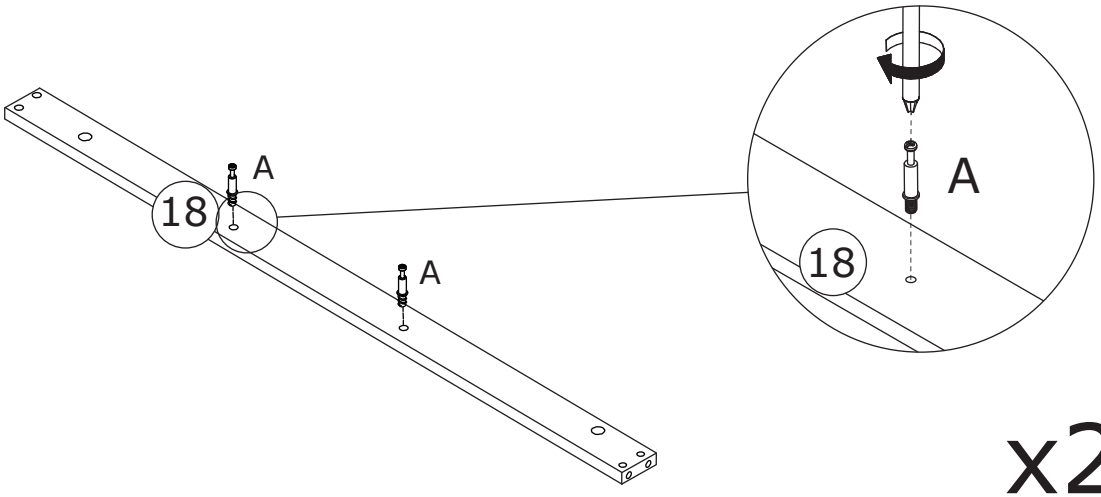

x2

2

B x 4



∅15 x 11 mm

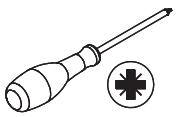

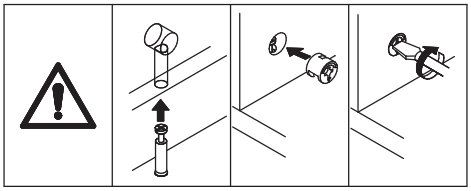

Connect board 17 to board 18, add cam lock(B) into board 17 and turn clockwise to tighten as shown.

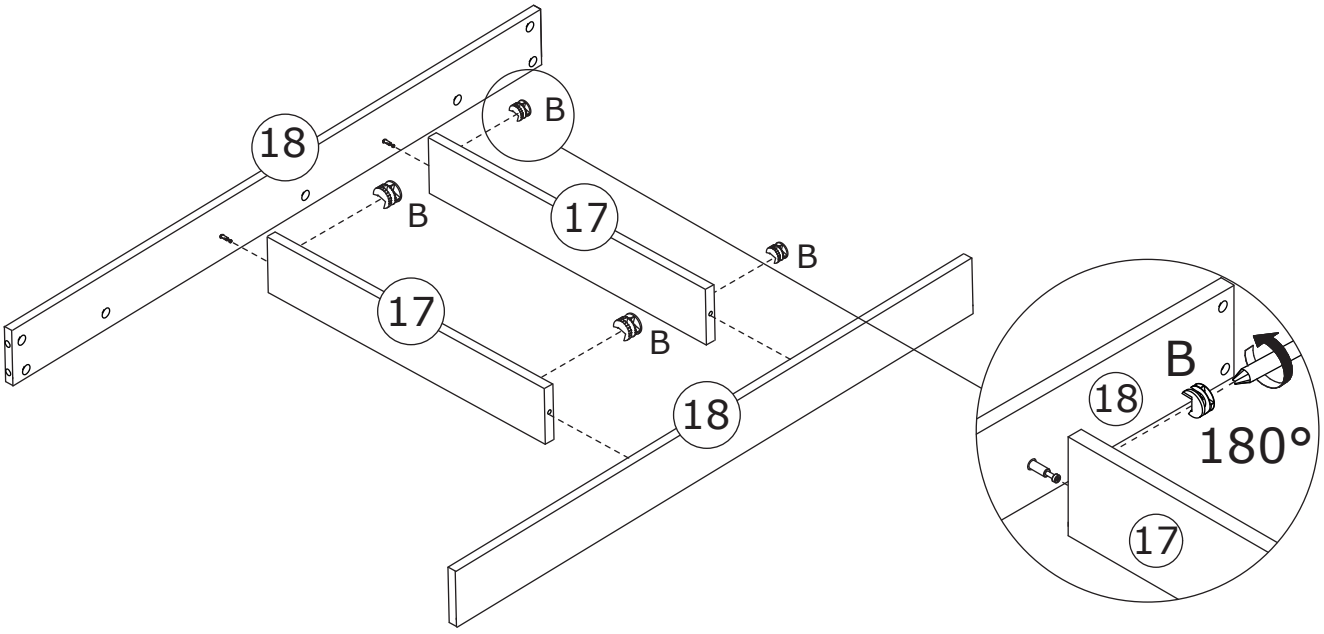

3

A x 8	C x 10	
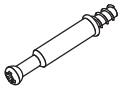		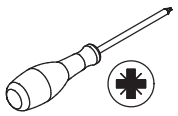
∅6 x 35 mm	∅8 x 30 mm	

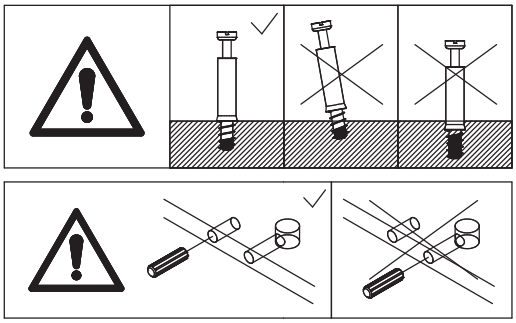

Screw eccentric rod(A) and insert wooden dowel(C) into board 12 as shown.

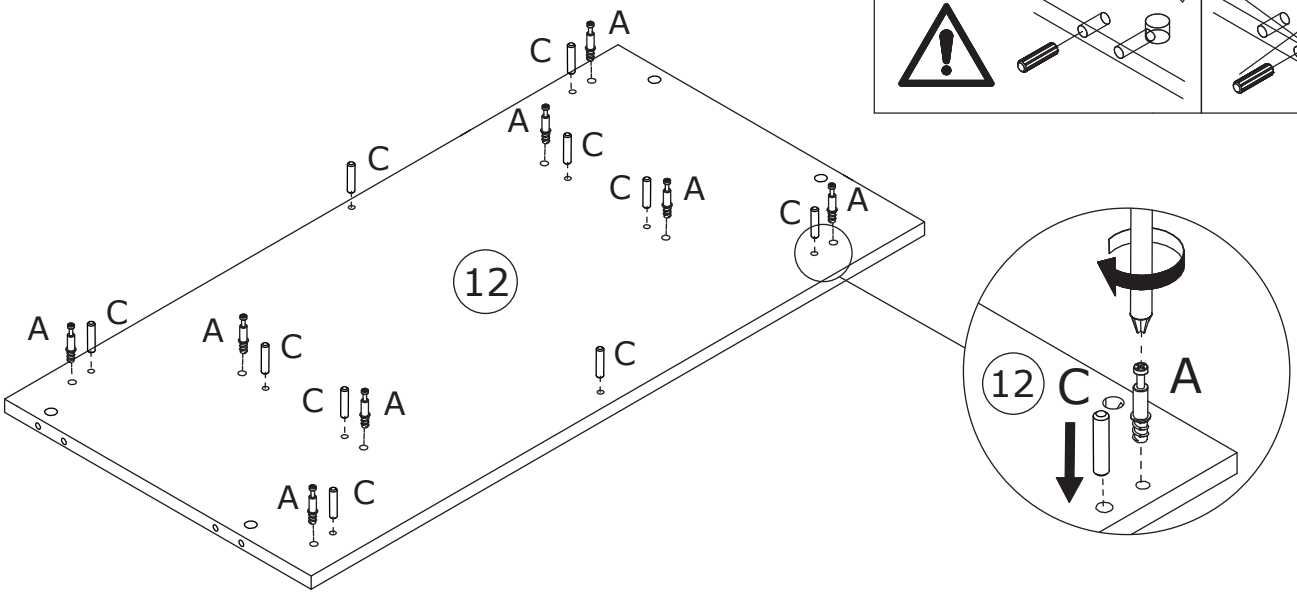

4

B x 8	
	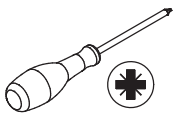
∅15 x 11 mm	

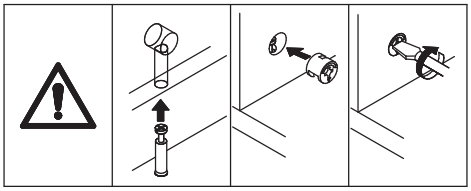

Attach the part to board 12, add cam lock(B) into board 17, 18 and turn clockwise to tighten as shown.

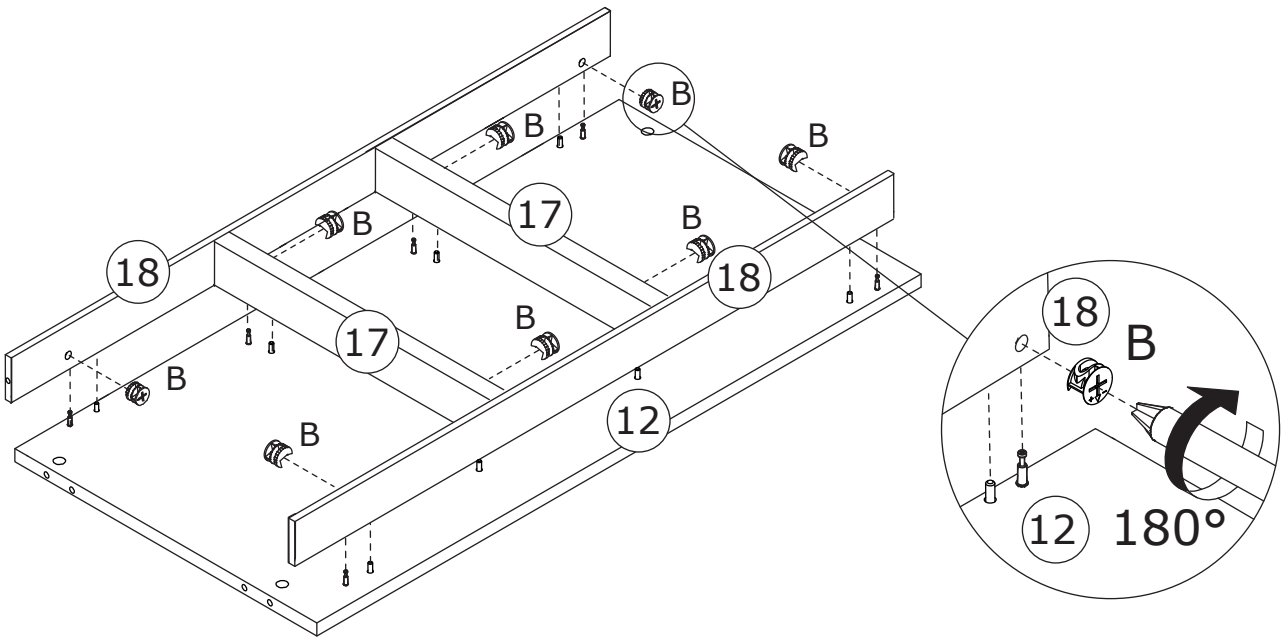

5

A x 2	C x 2	F x 1	
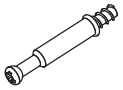		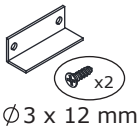	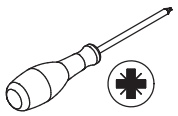
∅6 x 35 mm	∅8 x 30 mm	∅3 x 12 mm	

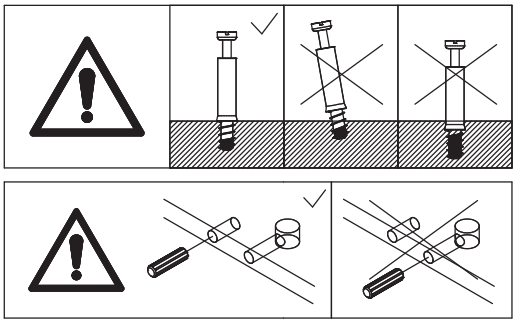

Screw eccentric rod(A) and insert wooden dowel(C) into board 12 as shown.
Fix part(F) to board 12 as shown.

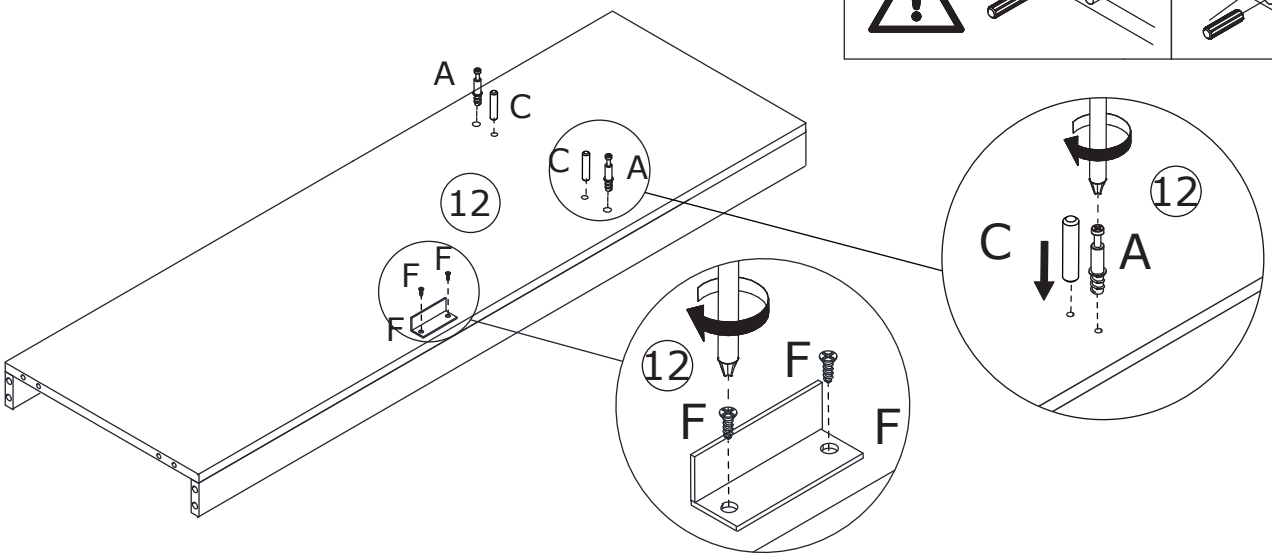

6

A x 6	C x 2	
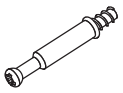		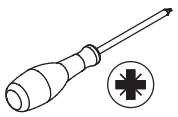
∅6 x 35 mm	∅8 x 30 mm	

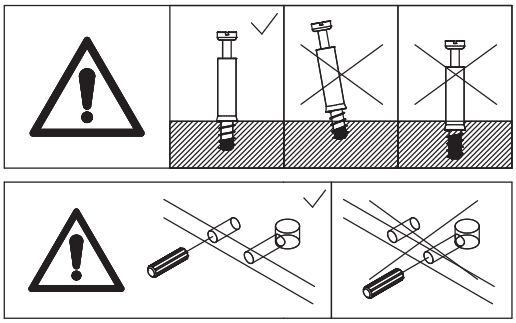

Screw eccentric rod(A) and insert wooden dowel(C) into board 8 as shown.

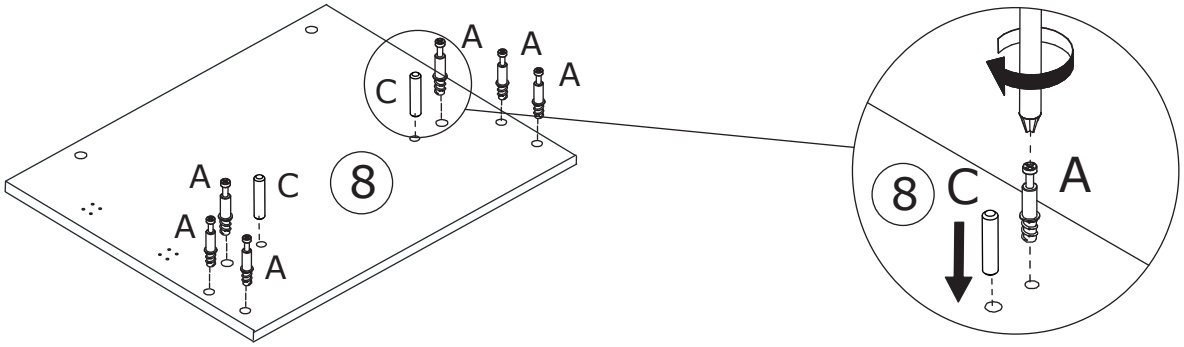

7

A x 6	C x 2	E x 4	D x 2	
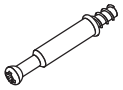			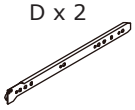	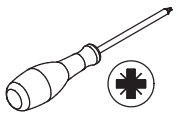
∅6 x 35 mm	∅8 x 30 mm	∅3 x 12 mm	CR L=350 mm	

Screw eccentric rod(A) and insert wooden dowel(C) into board 10 as shown.
Fix rail(CR) to board 10 with screw(E) as shown.

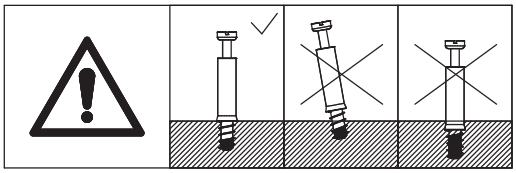

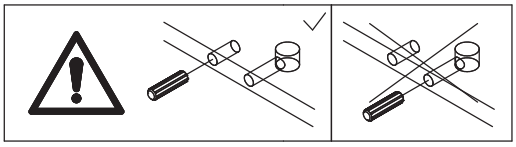

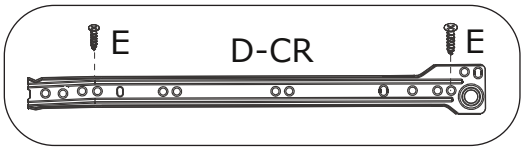

8

E x 4	D x 2	
	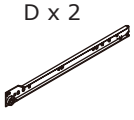	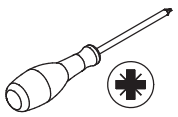
∅3 x 12 mm	CL L=350 mm	

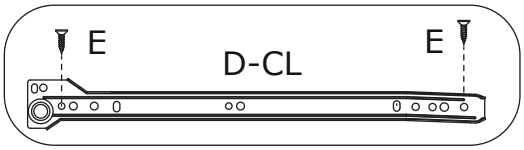

Fix rail(CL) to board 11
with screw(E) as shown.

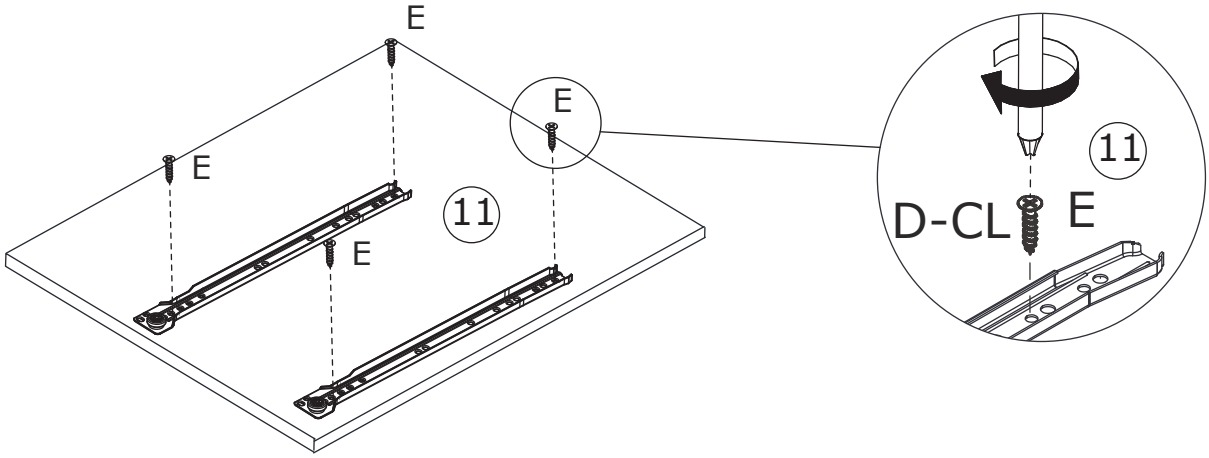

9

B x 6



∅15 x 11 mm

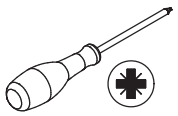

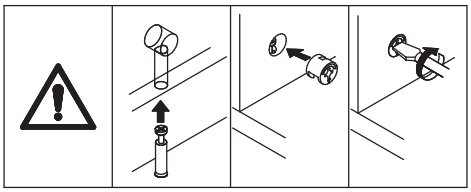

Attach board 8 to board 12 and 18, add cam lock(B) into board 12, 18 and turn clockwise to tighten as shown.

10

B x 6



∅15 x 11 mm

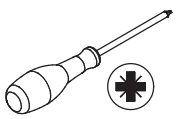

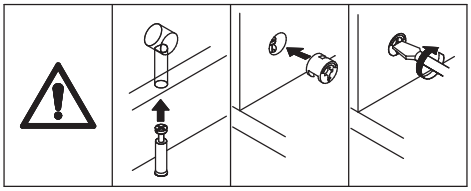

Attach board 10 to board 12 and 18, add cam lock(B) into board 12, 18 and turn clockwise to tighten as shown.

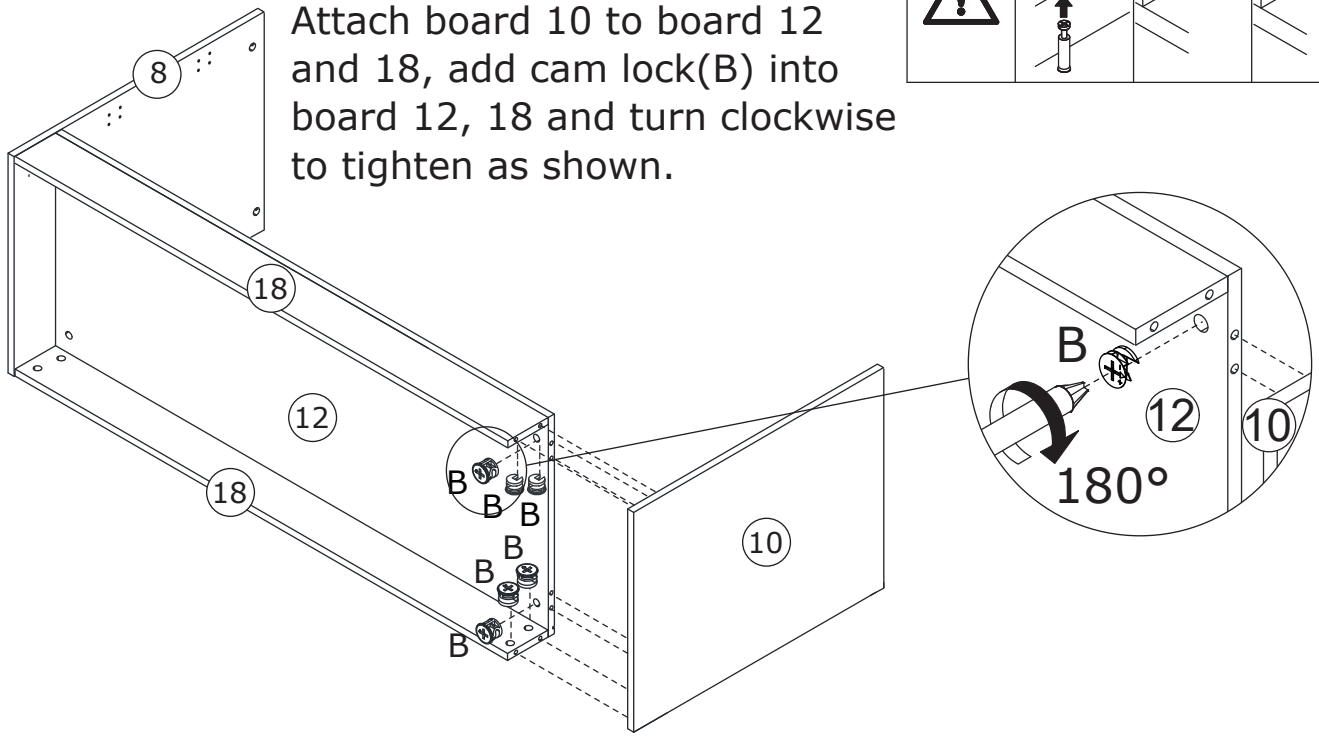

11

B x 2



∅15 x 11 mm

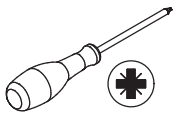

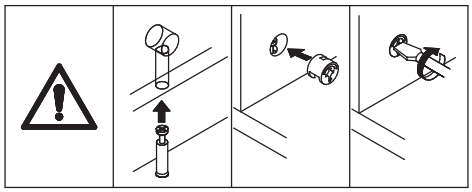

Attach board 11 to board 12, add cam lock(B) into board 11 and turn clockwise to tighten as shown.

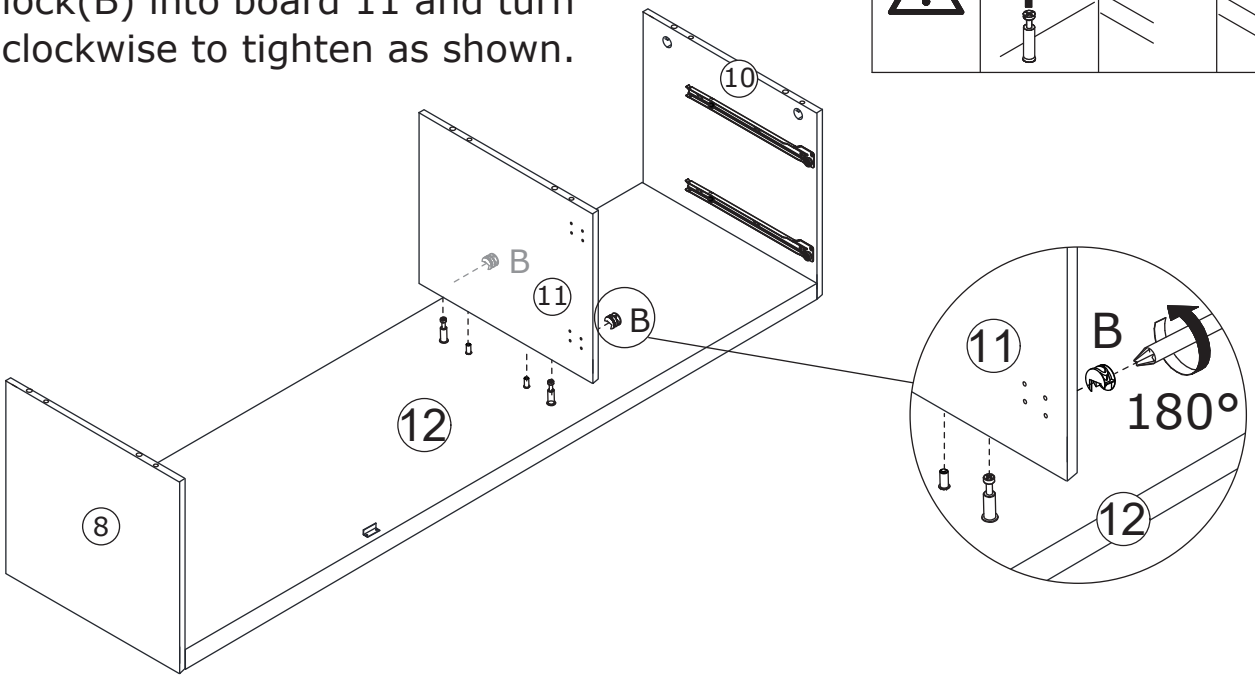

12

A x 6

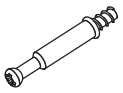

∅6 x 35 mm

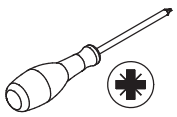

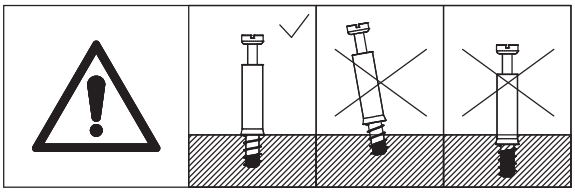

Screw eccentric rod(A) into board 5 as shown.

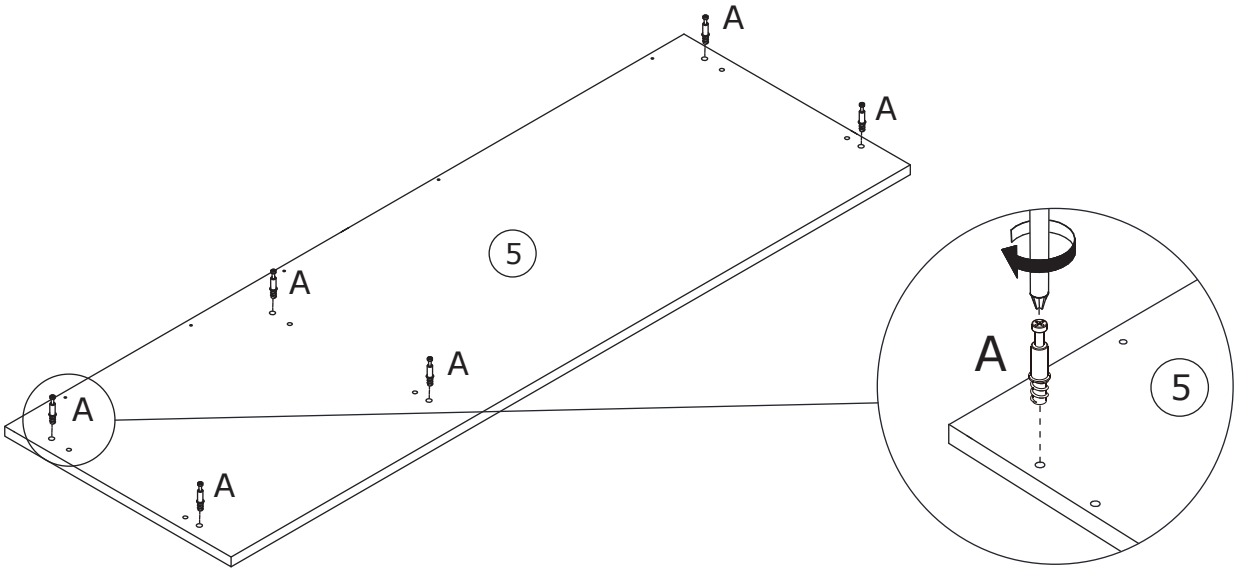

13

A x 6	C x 6	G x 5	
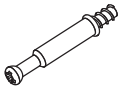			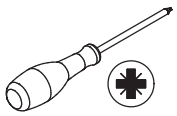
∅6 x 35 mm	∅8 x 30 mm	∅4 x 30 mm	

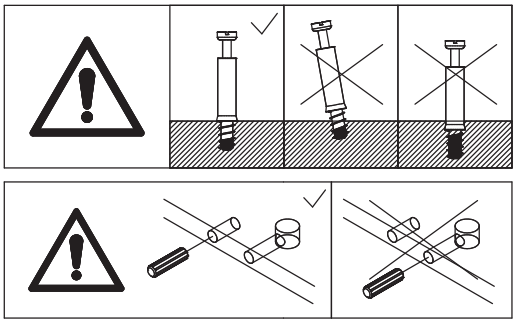

Screw eccentric rod(A) and insert wooden dowel(C) into board 5 as shown.
Fix board 14 and 15 to board 5 with screw(G) as shown.

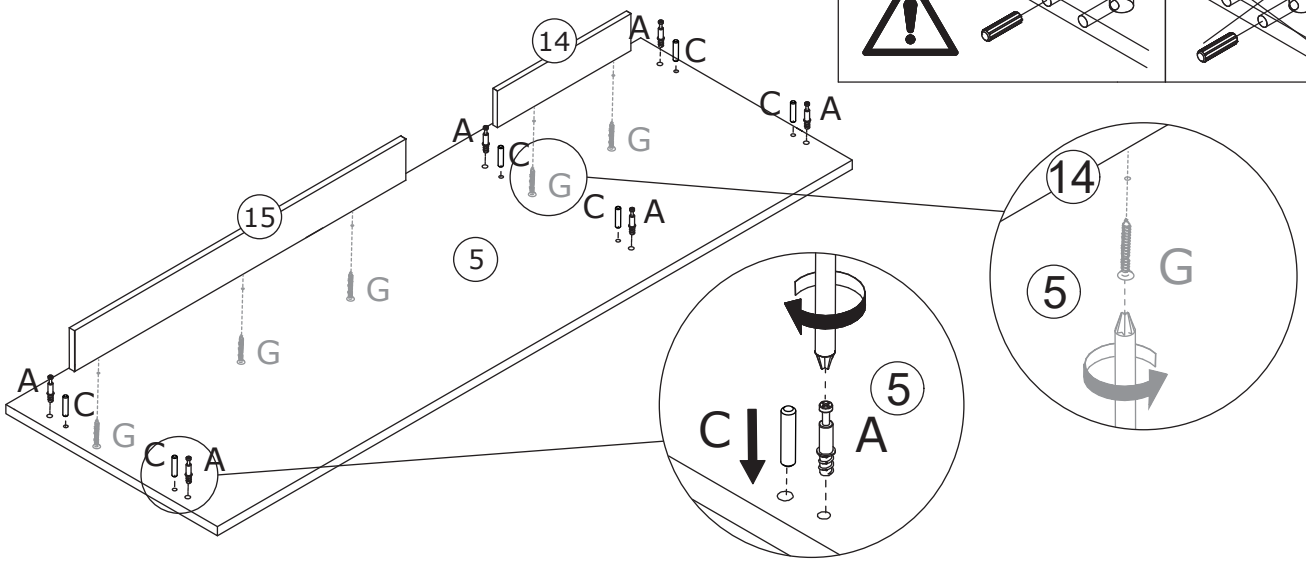

14

B x 6	C x 6	
		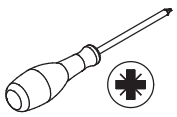
∅15 x 11 mm	∅8 x 30 mm	

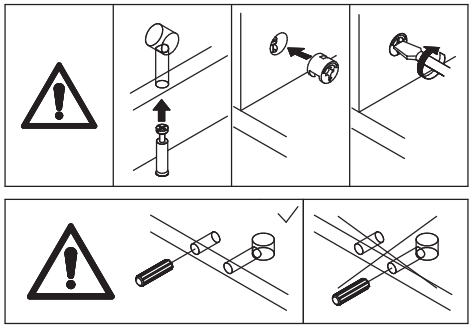

Attach board 5 to board 8, 11 and 10 using wooden dowel(C), add cam lock(B) into and turn clockwise to tighten as shown.

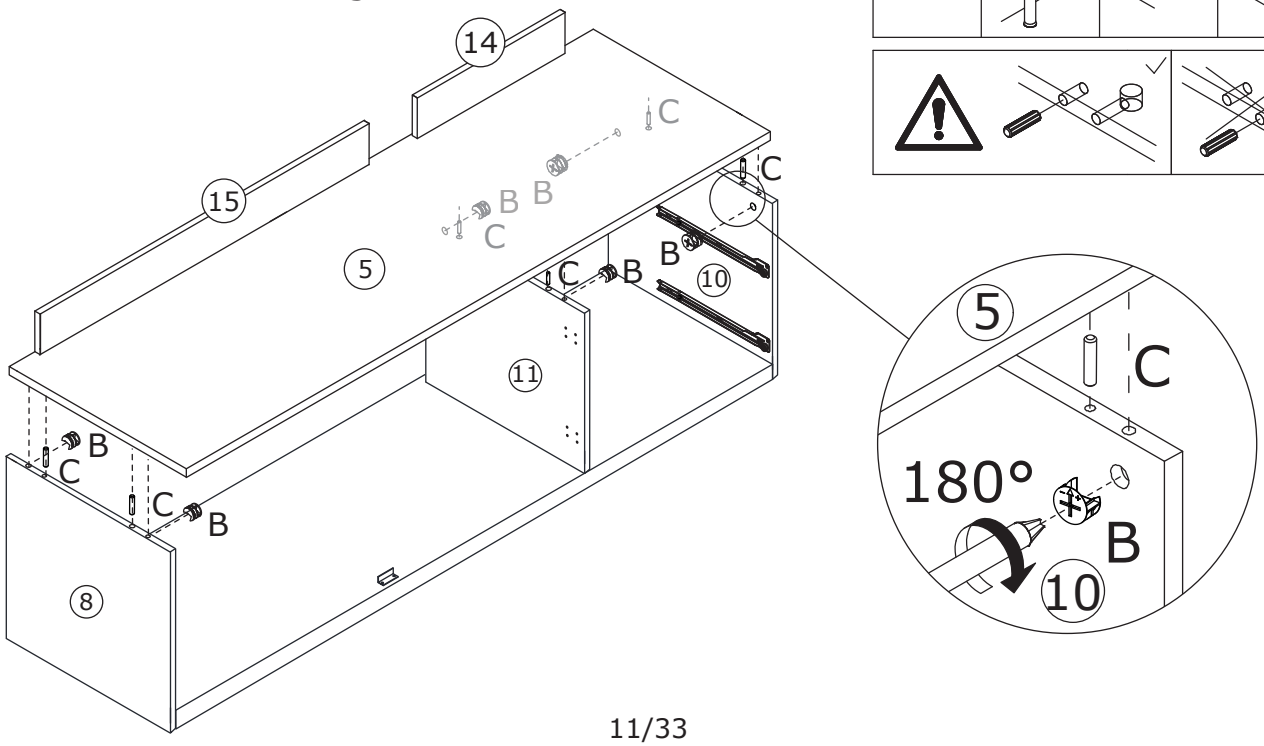

15

B x 2



∅15 x 11 mm

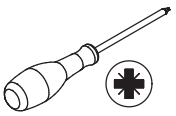

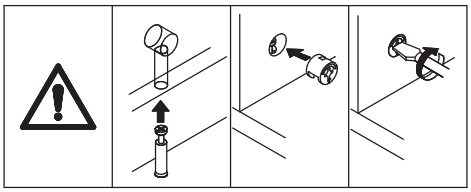

Attach board 2 to board 5, add cam lock(B) into and turn clockwise to tighten as shown.

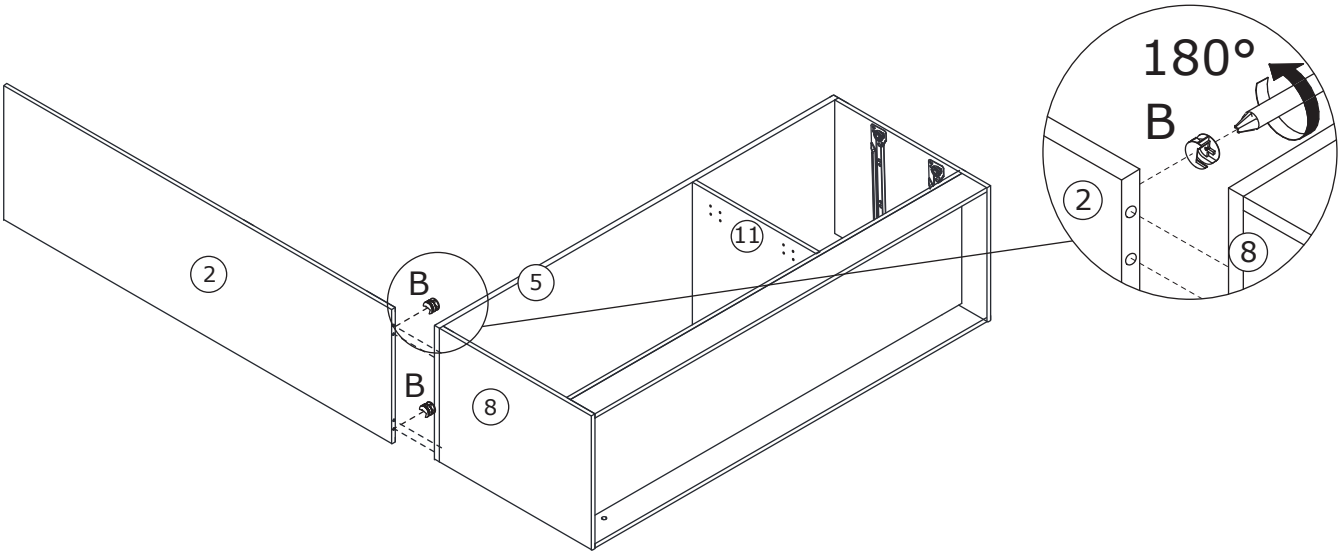

16

A x 6

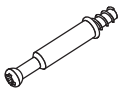

∅6 x 35 mm

C x 6



∅8 x 30 mm

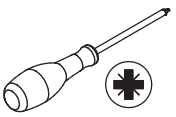

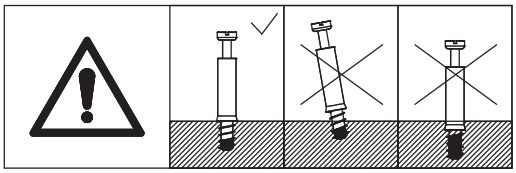

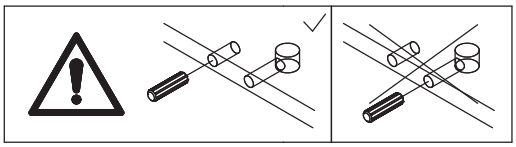

Screw eccentric rod(A) and insert wooden dowel(C) into board 4 as shown.

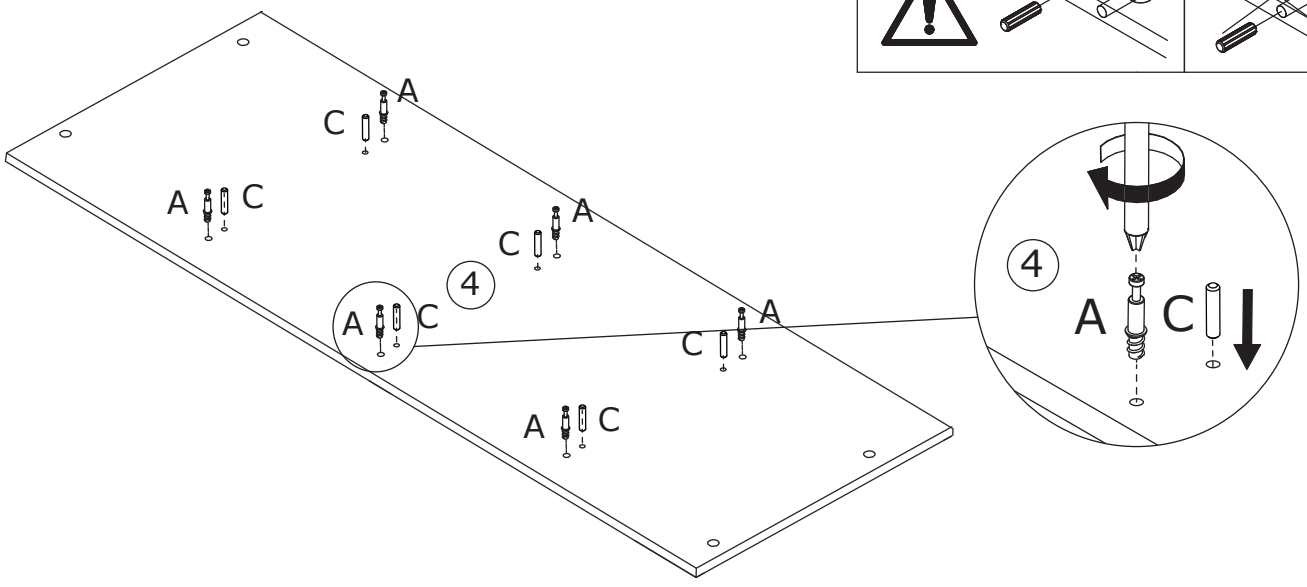

17

A x 6

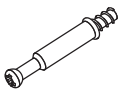

∅6 x 35 mm

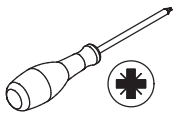

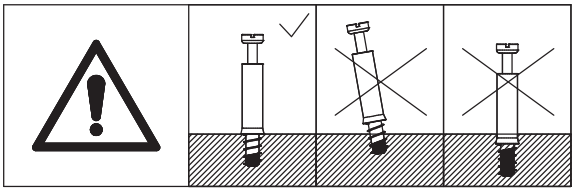

Screw eccentric rod(A) into board 3 as shown.

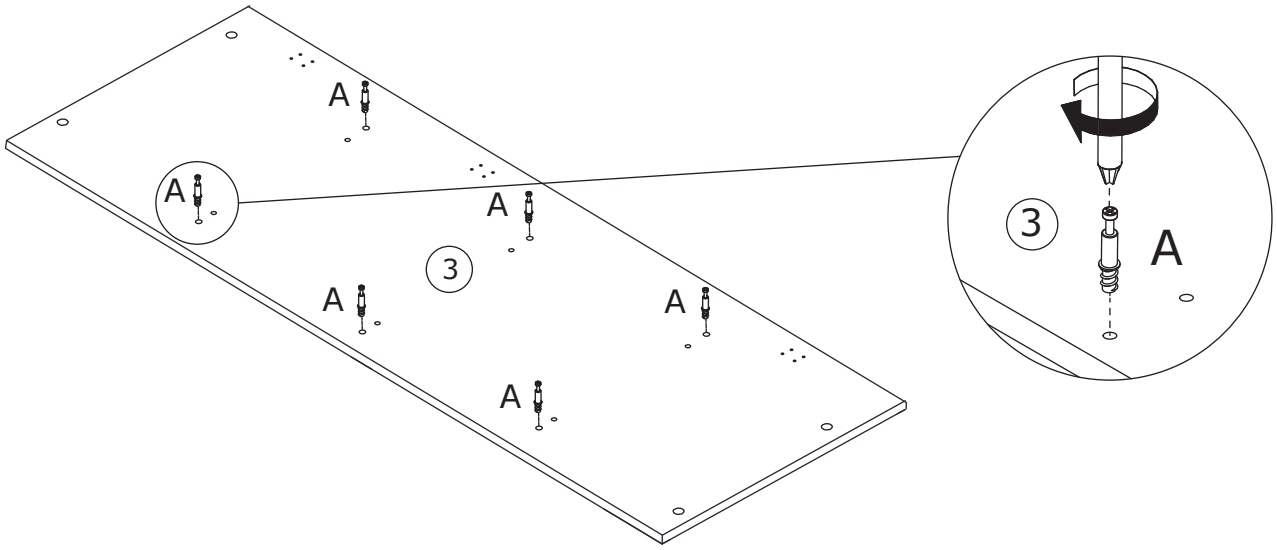

18

B x 6



∅15 x 11 mm

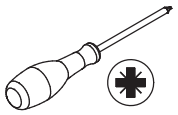

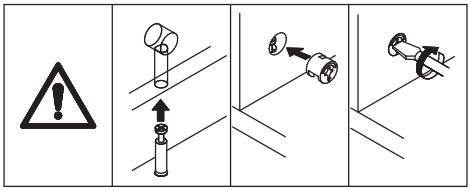

Attach board 13 to board 4, add cam lock(B) into and turn clockwise to tighten as shown.

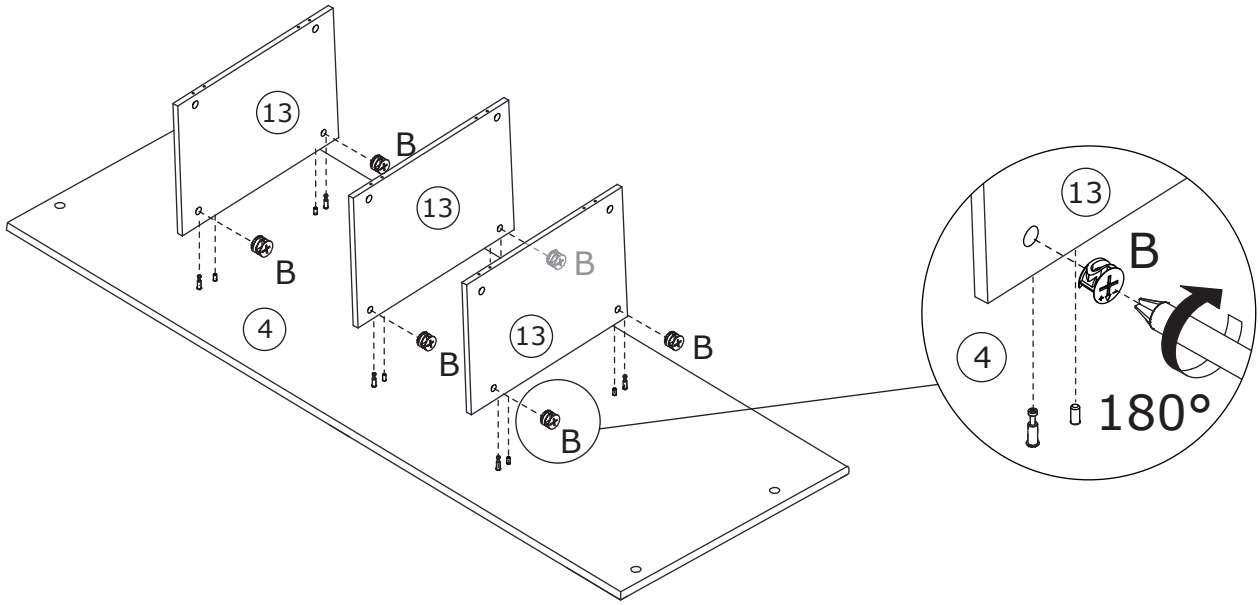

19

B x 6	C x 6	
		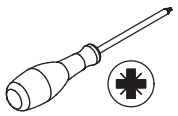
∅15 x 11 mm	∅8 x 30 mm	

Attach board 3 to board 13, add cam lock(B) into and turn clockwise to tighten as shown.

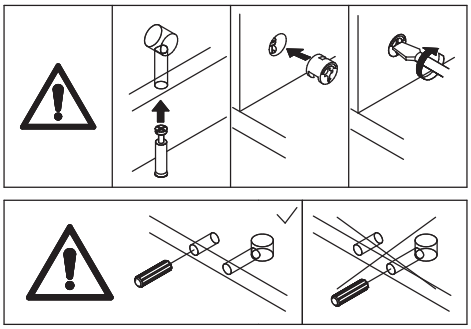

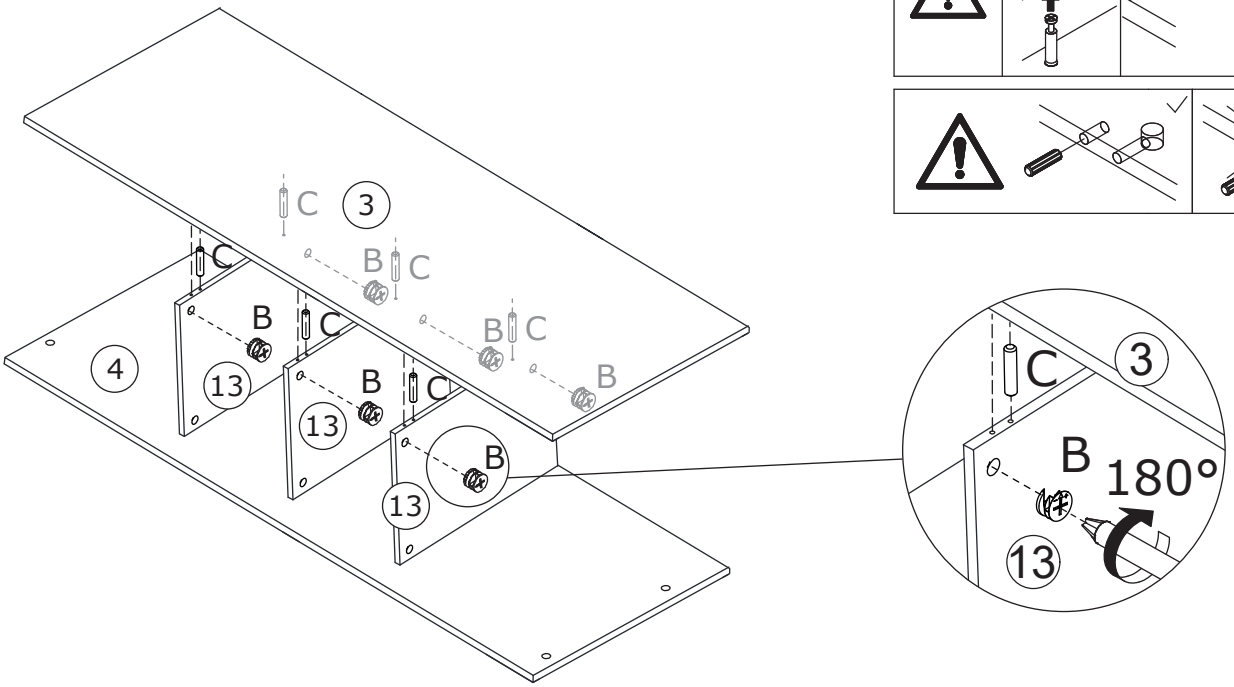

20

B x 4	
	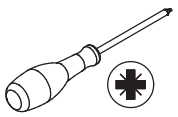
∅15 x 11 mm	

Attach the part to board 5, add cam lock(B) into and turn clockwise to tighten as shown.

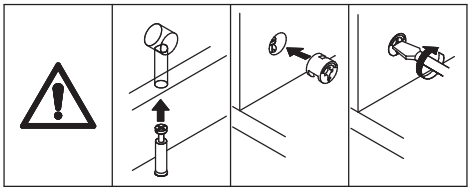

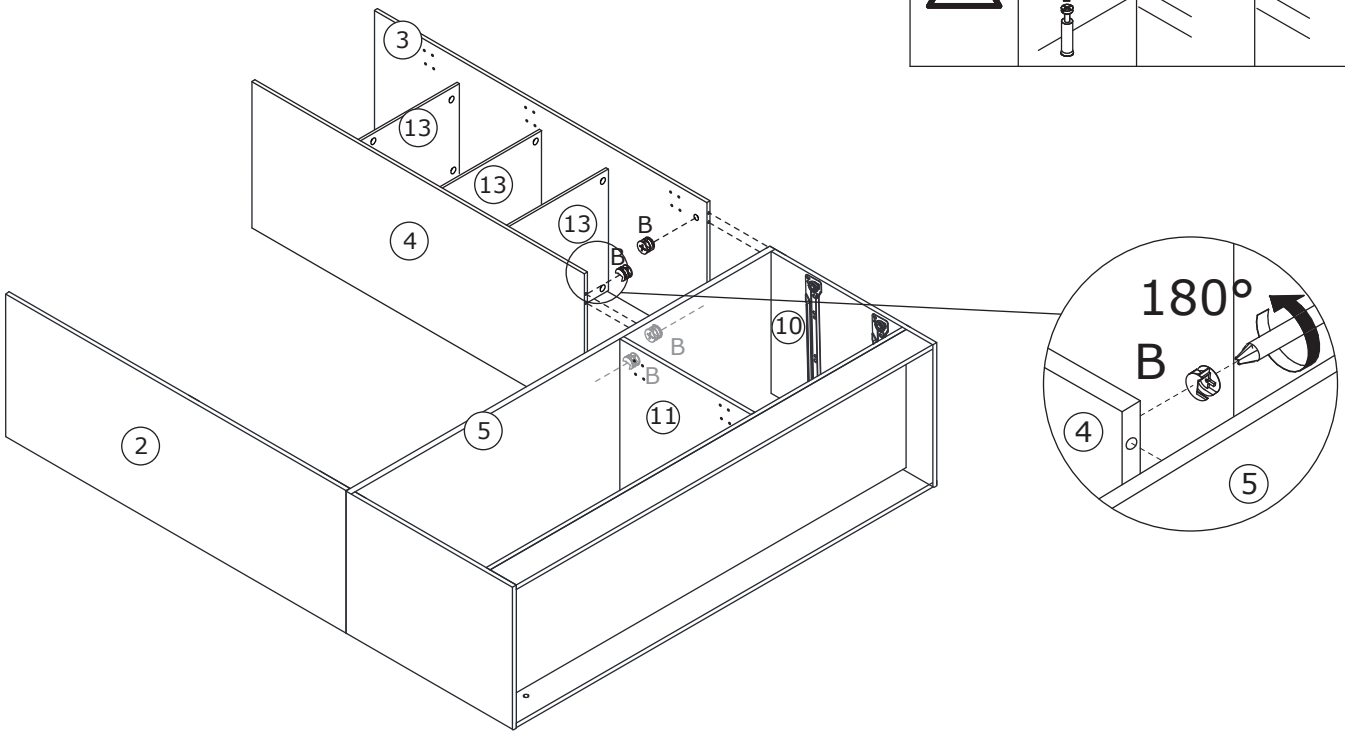

21

M x 1

x2

∅3.5 x 14 mm

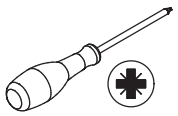

Fix part(M) to board 1 as shown.

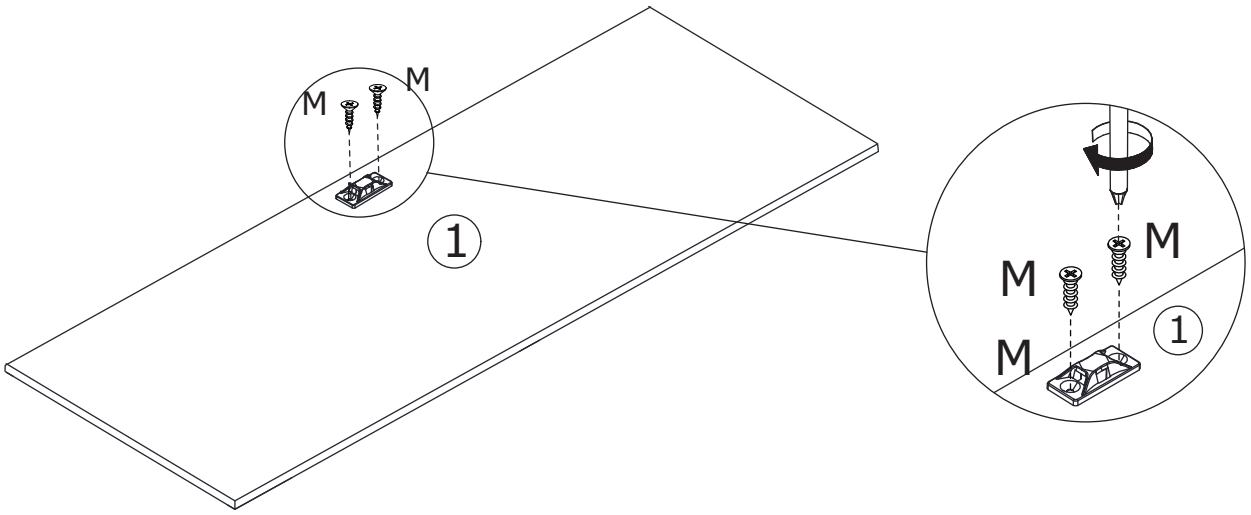

22

A x 6	C x 6	F x 1	
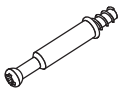		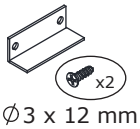	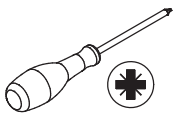
∅6 x 35 mm	∅8 x 30 mm	∅3 x 12 mm	

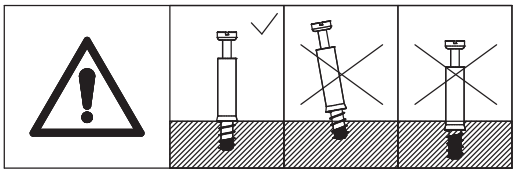

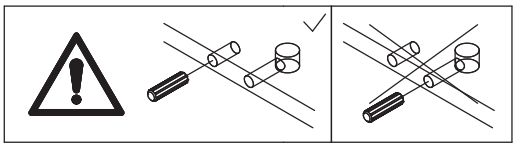

Screw eccentric rod(A) and insert wooden dowel(C) into board 1 as shown.
Fix part(F) to board 1 as shown.

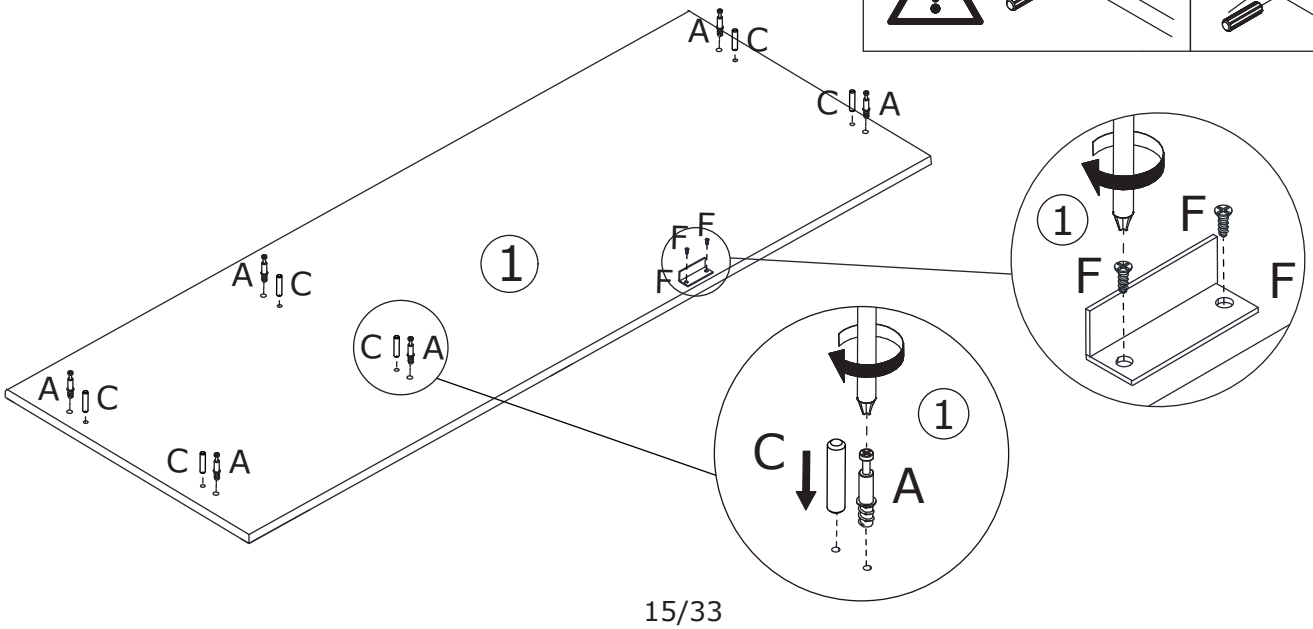

23

B x 6



∅15 x 11 mm

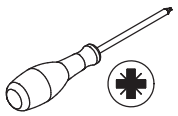

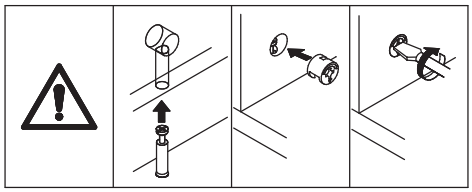

Cover board 1 to top, add cam lock(B)
into and turn clockwise to tighten as shown.

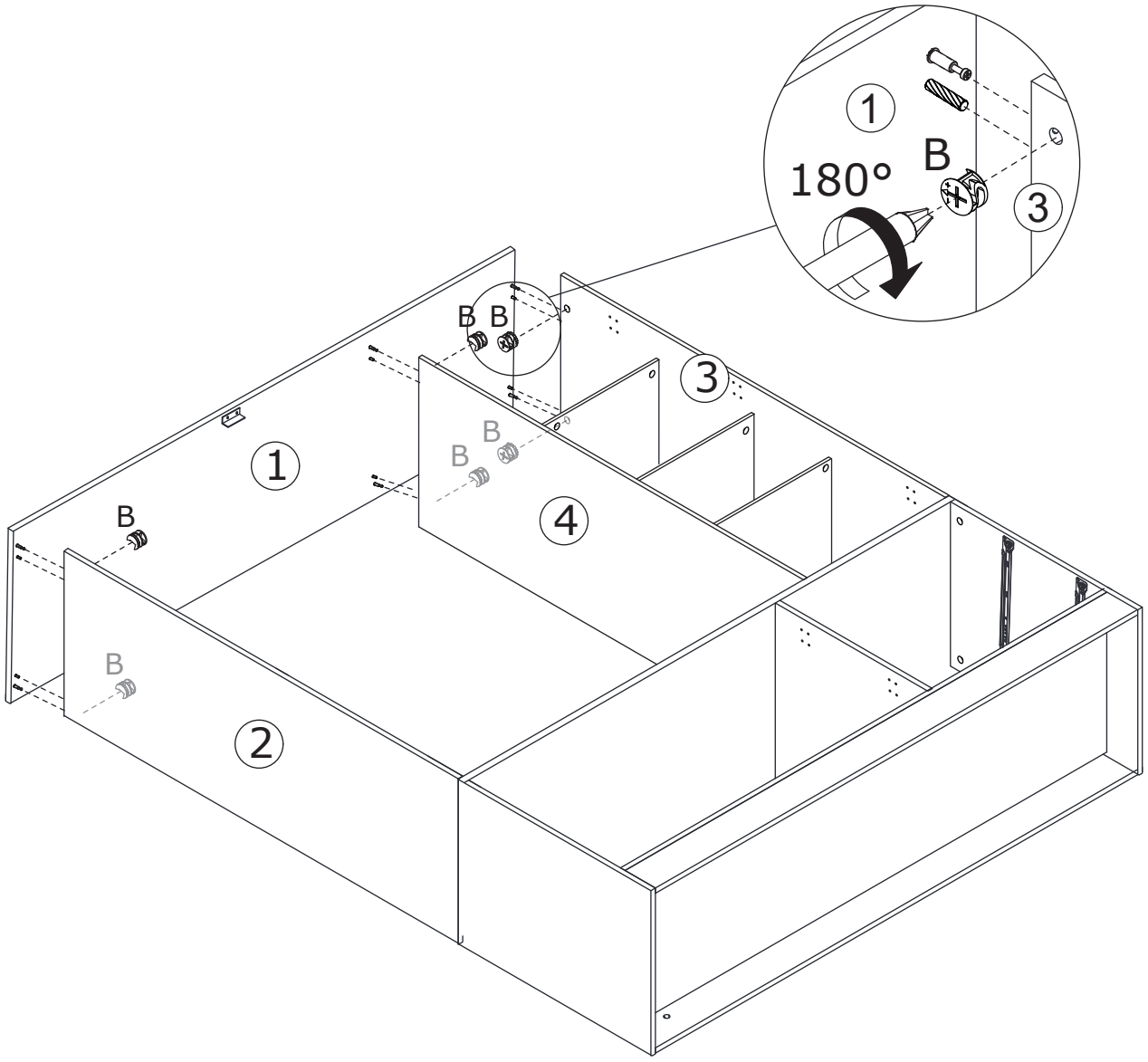

24

P x 29	R x 11	
	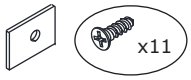	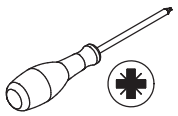
∅3 x 12 mm	∅3 x 12 mm	

Fix back board 6, 7 and 16 to the cabinet with screw(P) as shown.
Use iron sheet(R) to fix board 6, 7 and 16 together as shown.

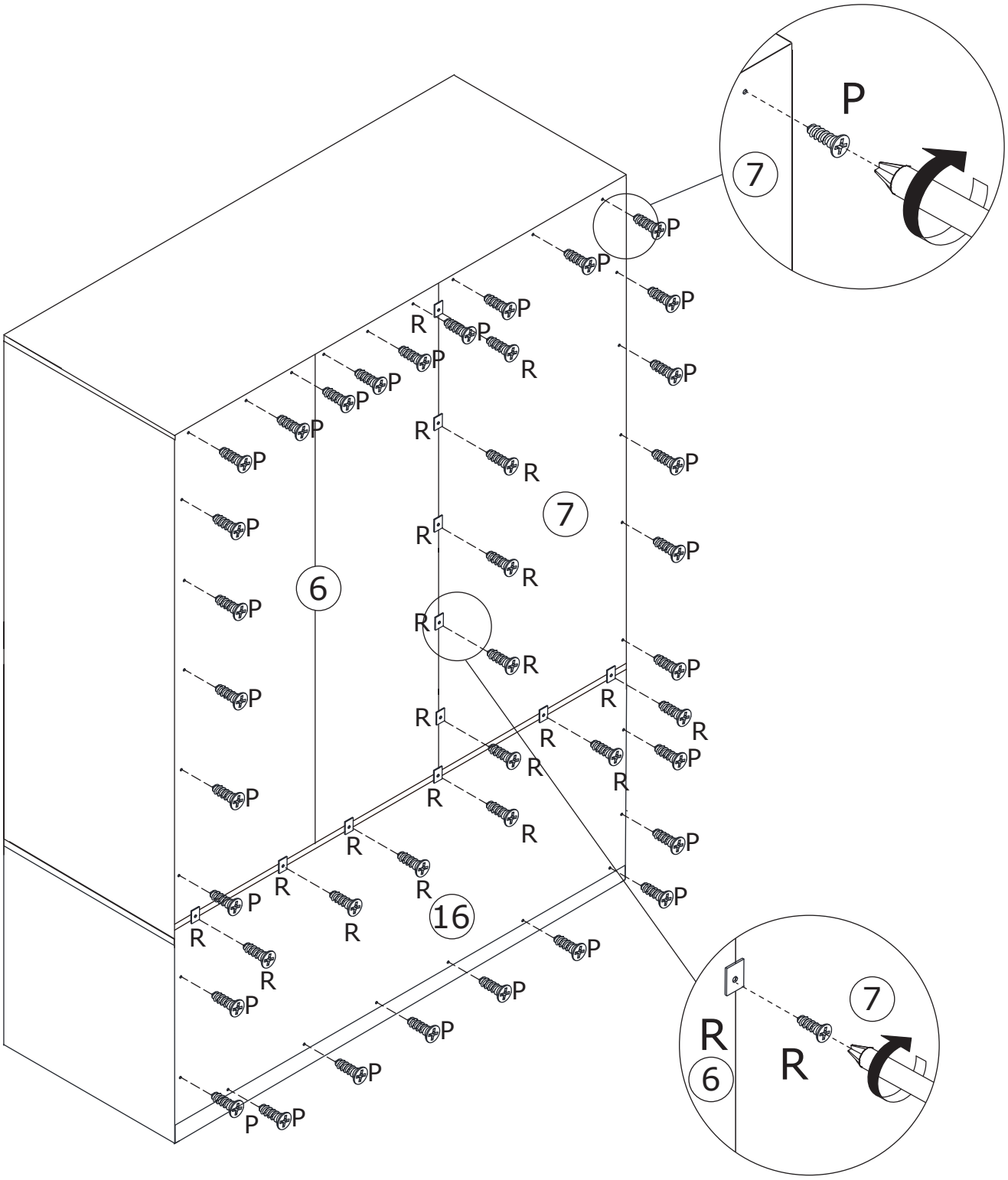

25

N x 1

x4

∅3.5 x 14 mm

Fix part(N) to board 2 and 4 as shown.
Place clothing rod 29 as shown.

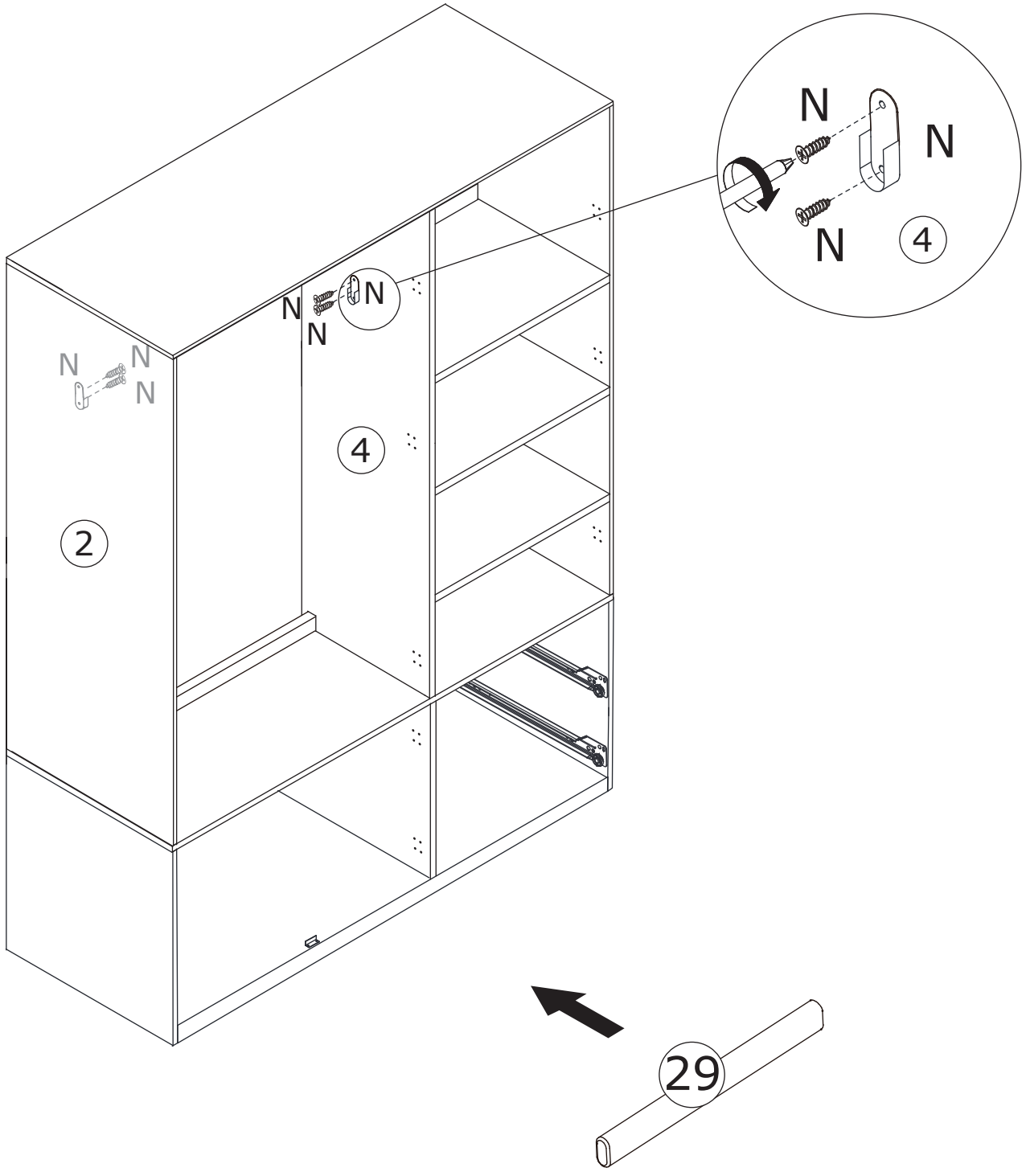

26

Pay attention to the difference between the middle parts of the two types of door hinges.

- The small curved door hinges(H) are used on the outermost door plates.
- And the large curved door hinges(S) are used on the door panel in the middle of the cabinet.

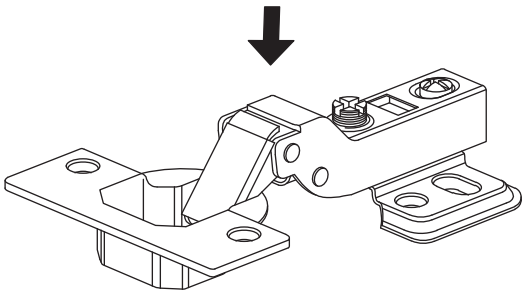

H

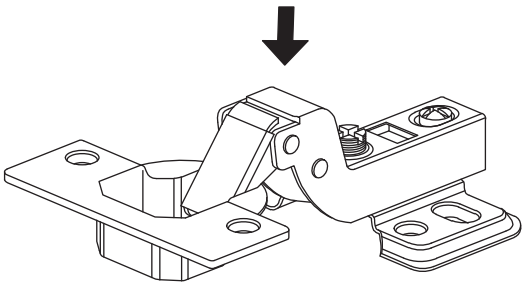

S

27

H x 6

x2

∅3.5 x 14 mm

H

S

Fix hinge(H) to board 26 and 27 as shown.

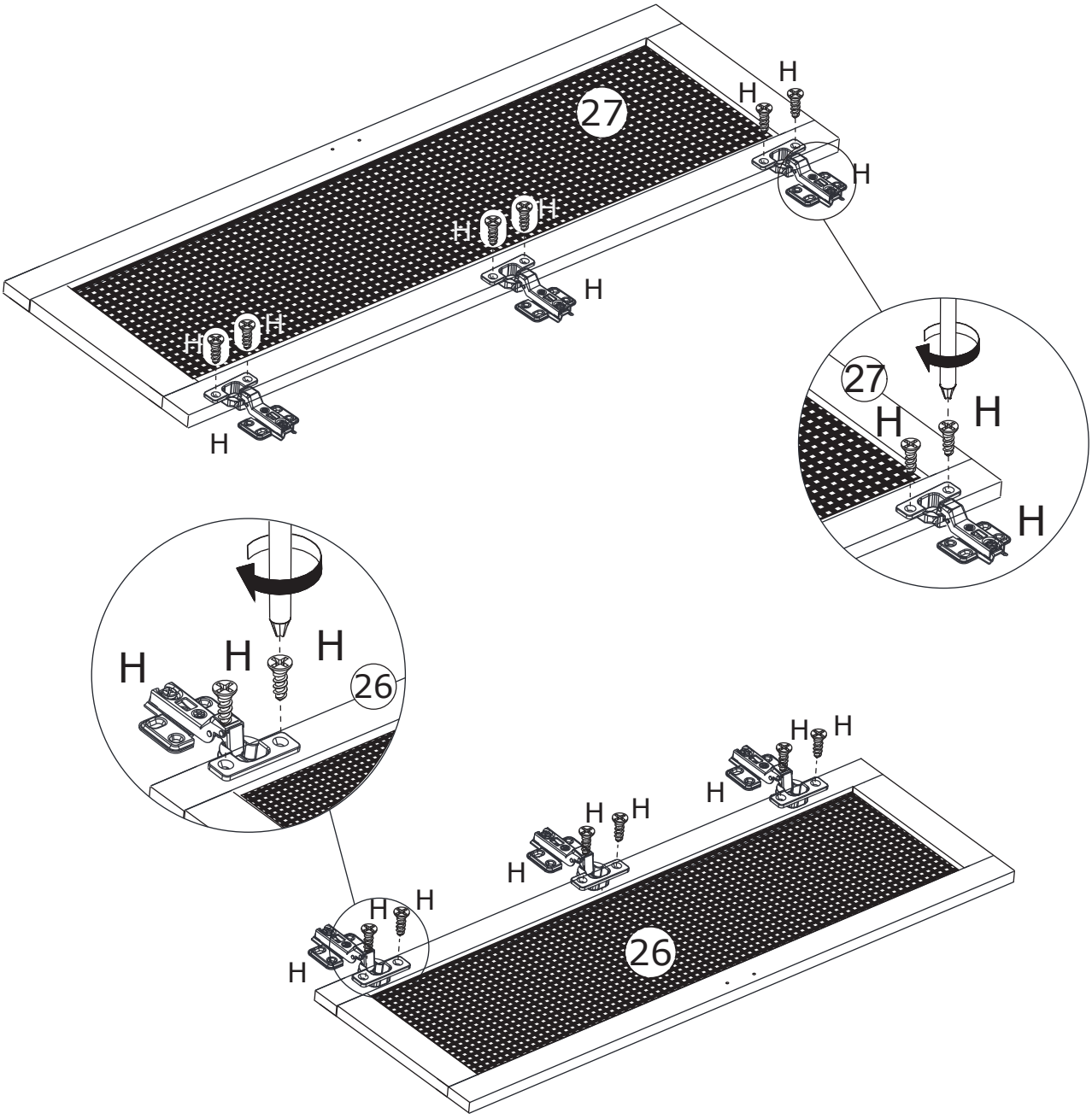

28

H x 24	Q x 2	
∅3.5 x 14 mm	∅4 x 18 mm	

	H	S

Assemble door 26 and 27 to board 2
and 3 by fixing hinge(H) as shown.
Fix handle(Q) to board 26 and 27 as shown.

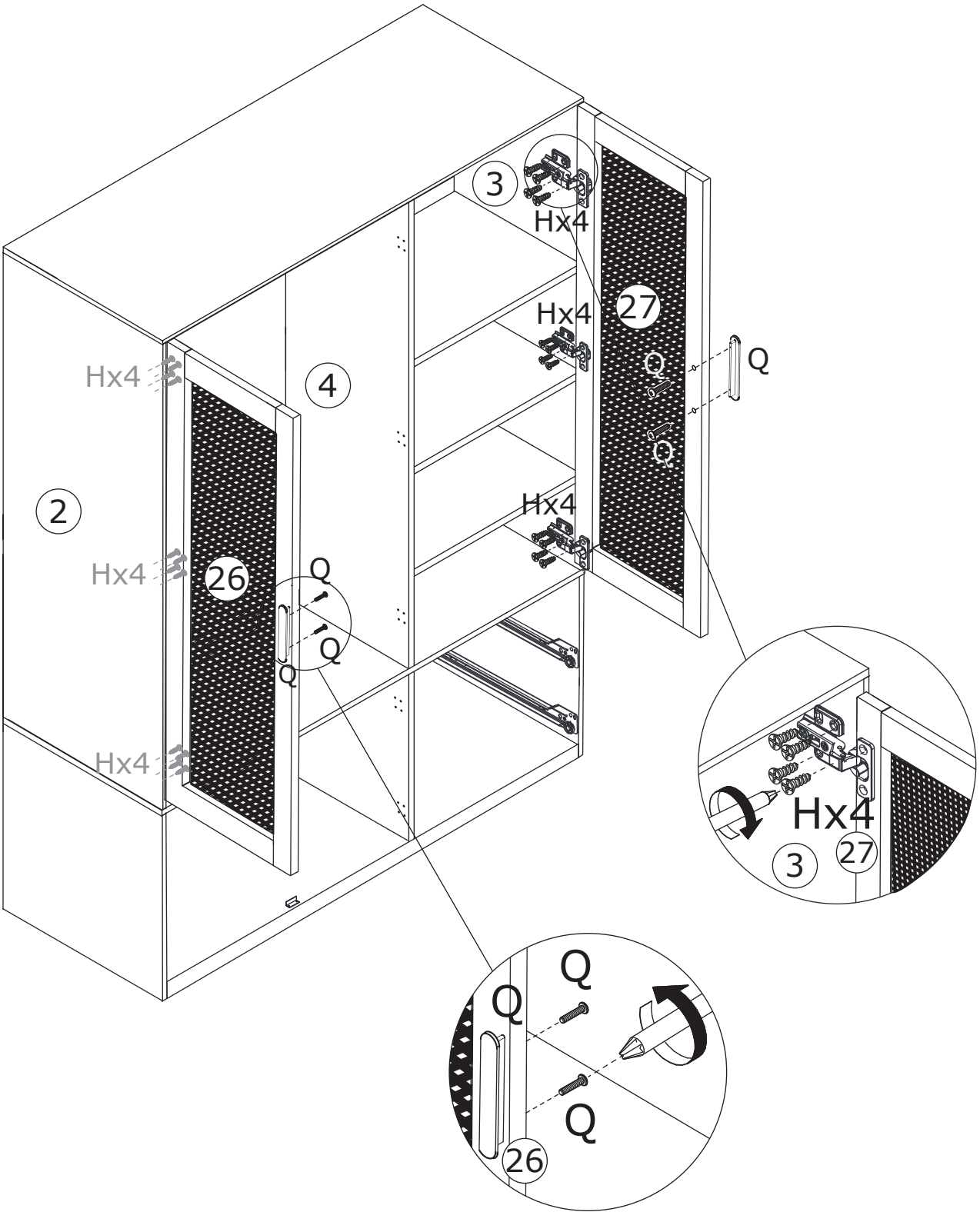

29

S x 3

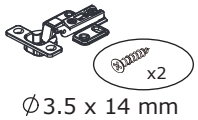

∅3.5 x 14 mm

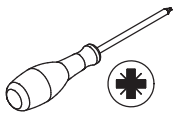



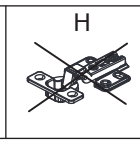

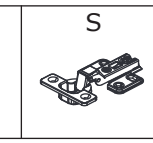

Fix hinge(S) to another board 27 as shown.

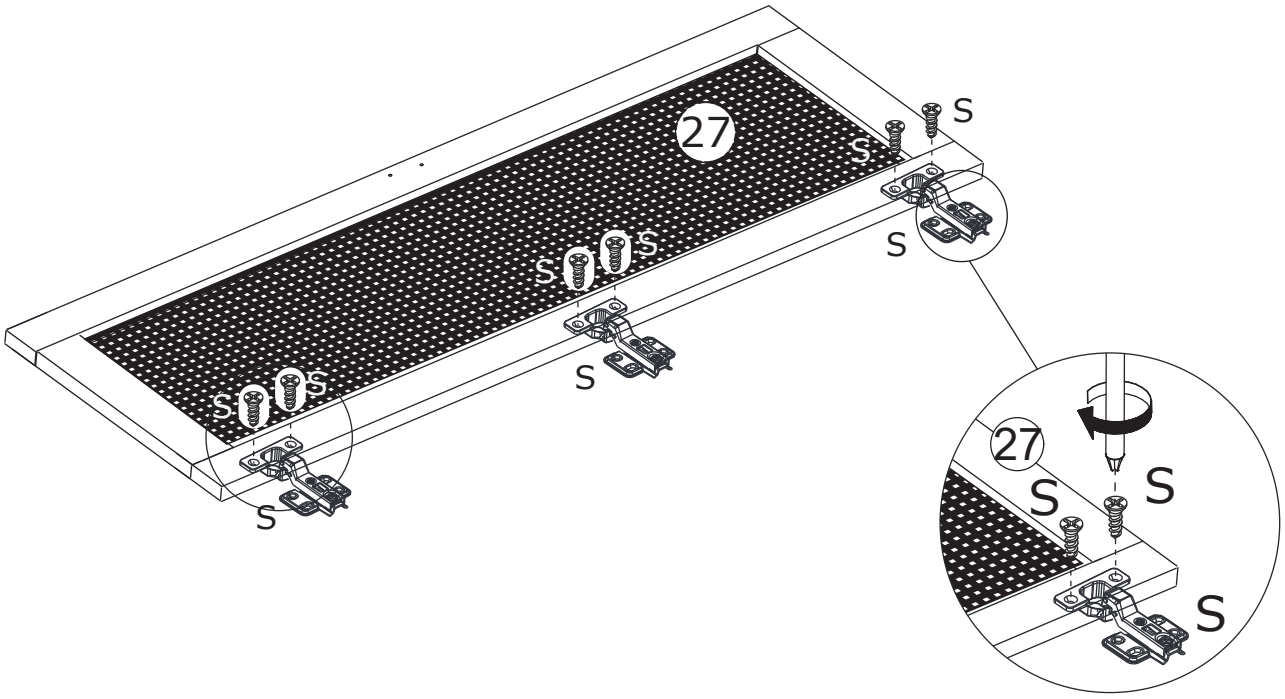

30

Q x 1	S x 12	
∅4 x 18 mm	∅3.5 x 14 mm	

	H	S

Assemble door 27 to board 4
by fixing hinge(S) as shown.
Fix handle(Q) to board 27 as shown.

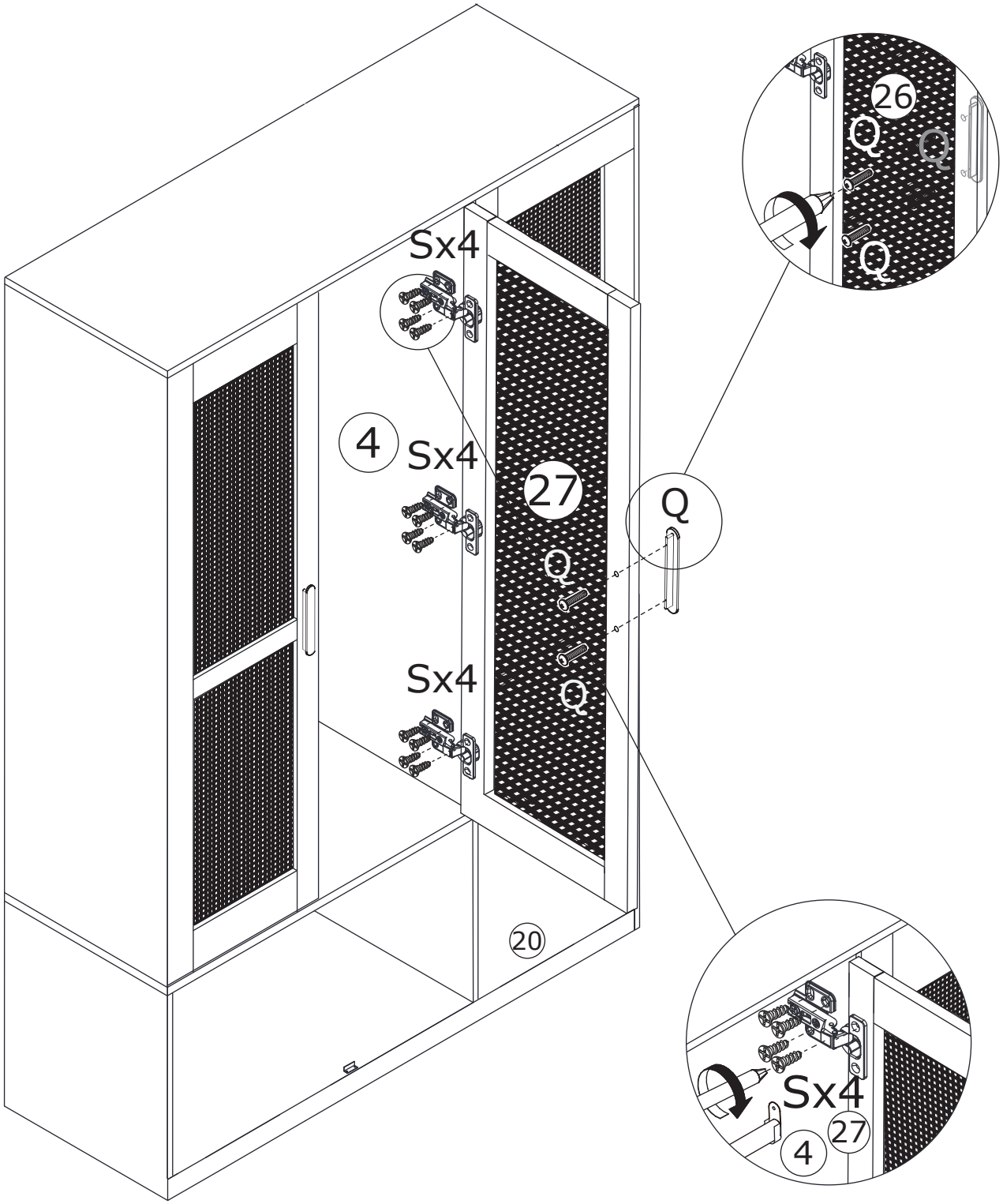

31

H x 2

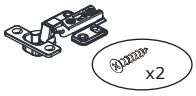

∅3.5 x 14 mm

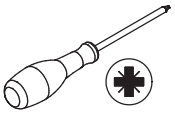





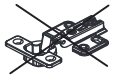

Fix hinge(H) to board 19 as shown.

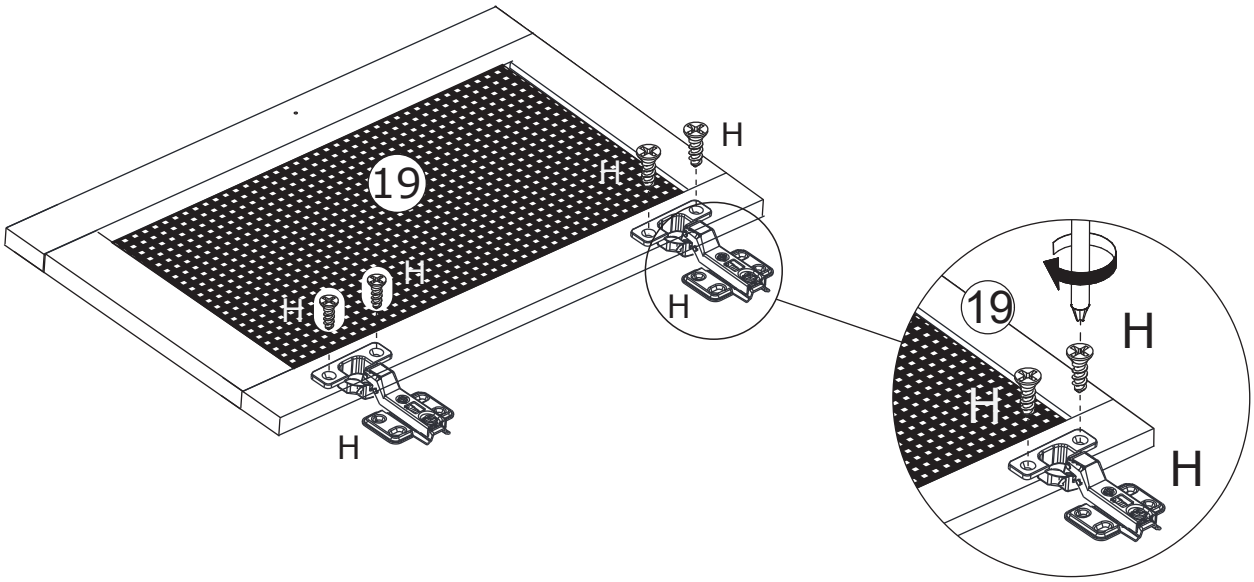

32

H x 8	J x 1	
∅3.5 x 14 mm	∅4 x 22 mm	

	H	S

Assemble door 19 to board 8
by fixing hinge(H) as shown.
Fix knob(J) to board 19 as shown.

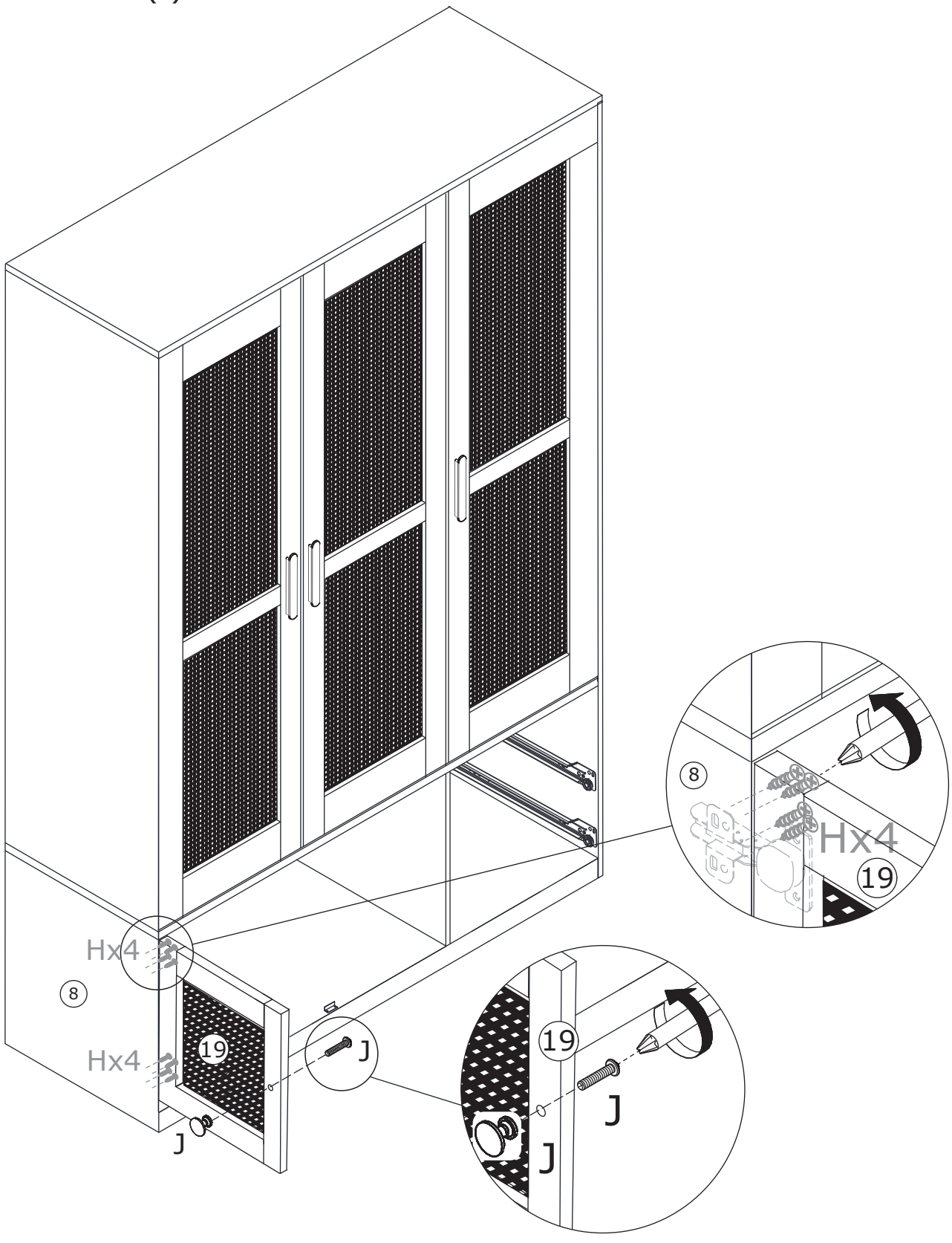

33

S x 2

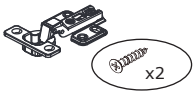

∅3.5 x 14 mm

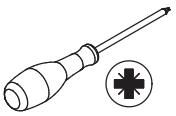







Fix hinge(S) to board 20 as shown.

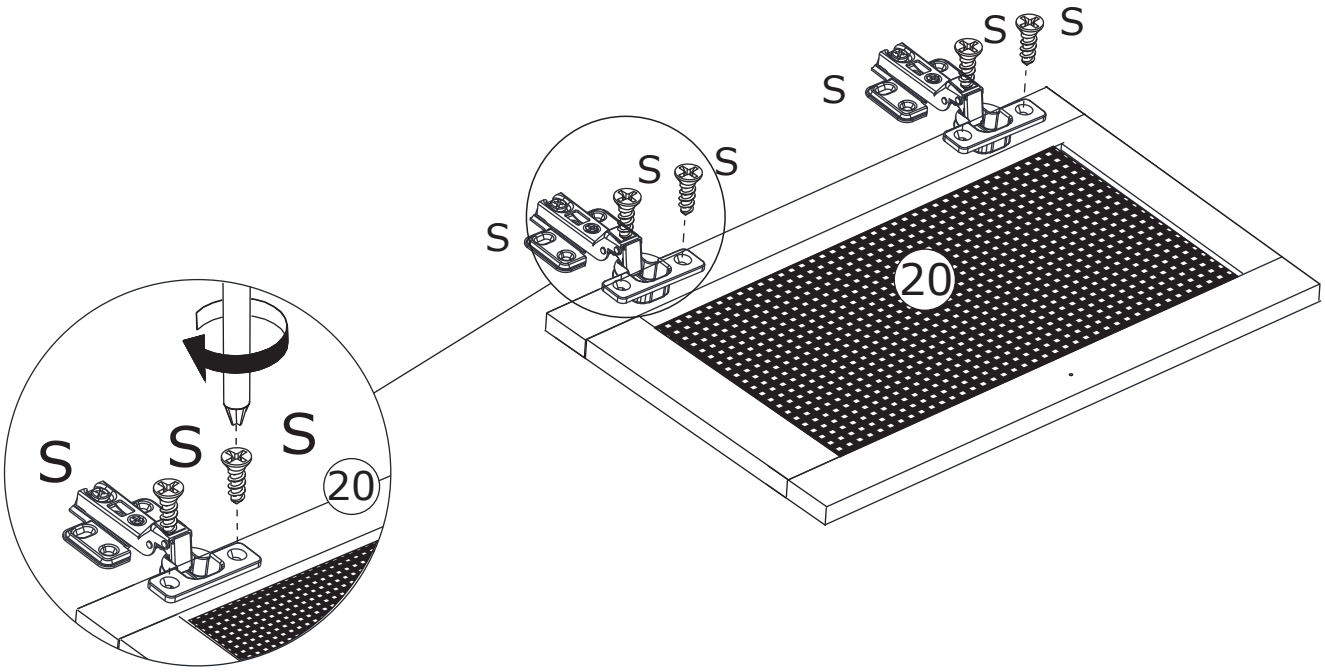

34

J x 1	S x 8	
∅4 x 22 mm	∅3.5 x 14 mm	

	H	S

Assemble door 20 to board 11
by fixing hinge(S) as shown.
Fix knob(J) to board
20 as shown.

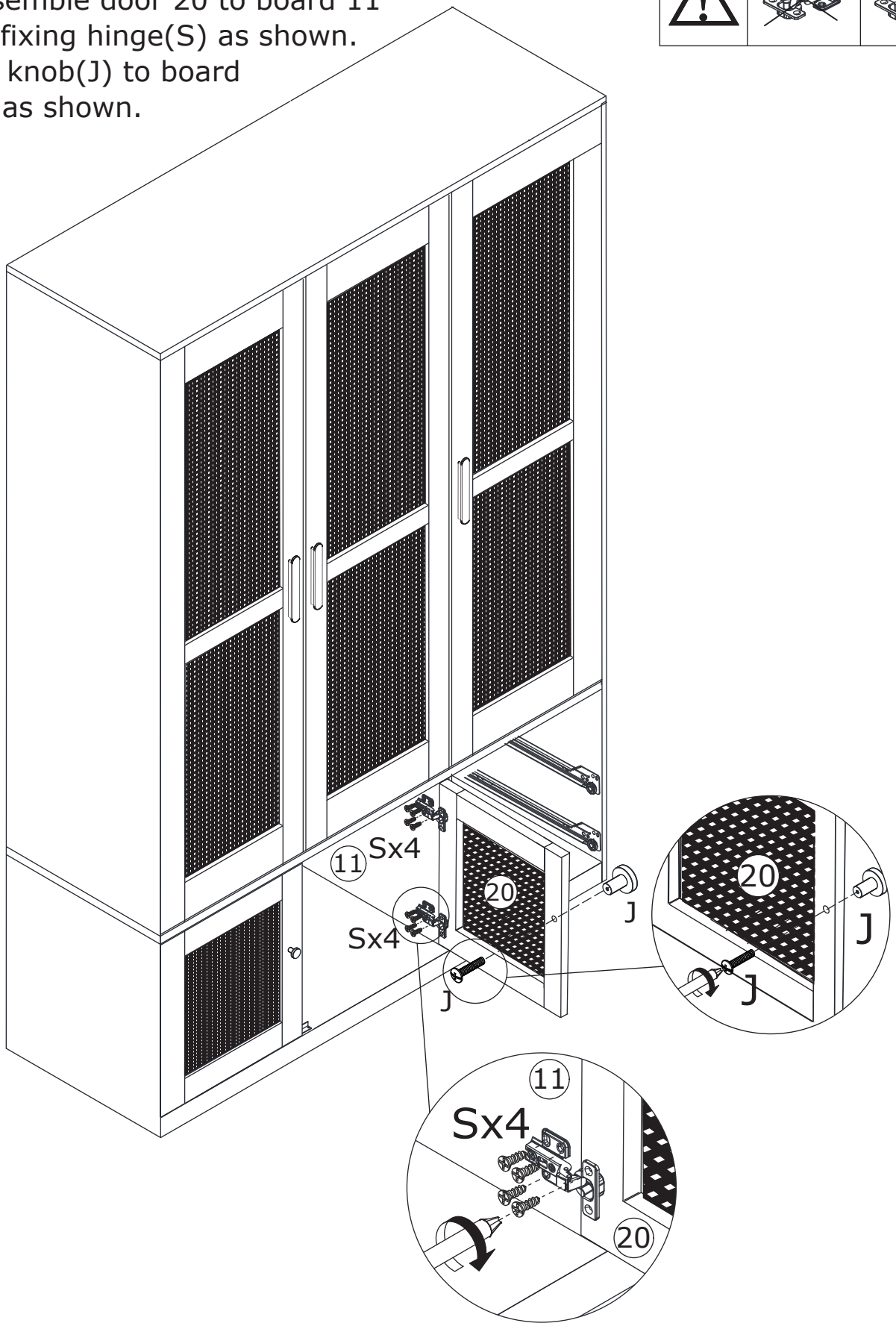

35

A x 16

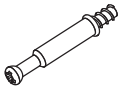

∅6 x 35 mm

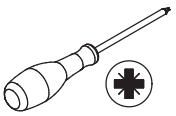

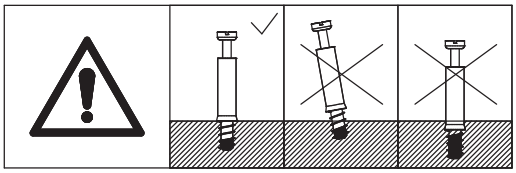

Screw eccentric rod(A) into board 21, 22 and 25 at first.

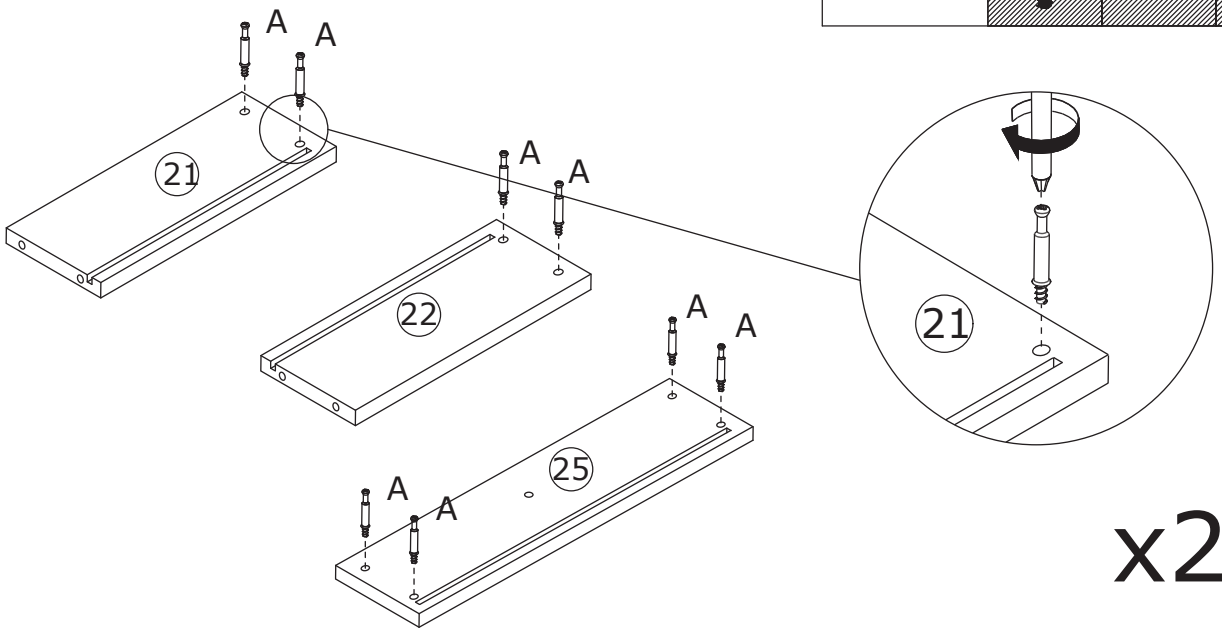

x2

36

B x 8



∅15 x 11 mm

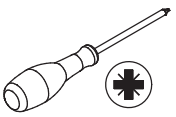

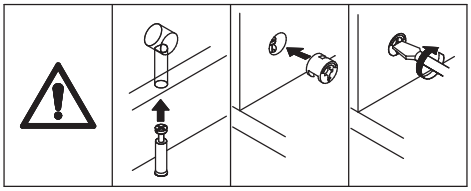

Connect board 23 to board 21 and 22, add cam lock(B) into and turn clockwise to tighten as shown.

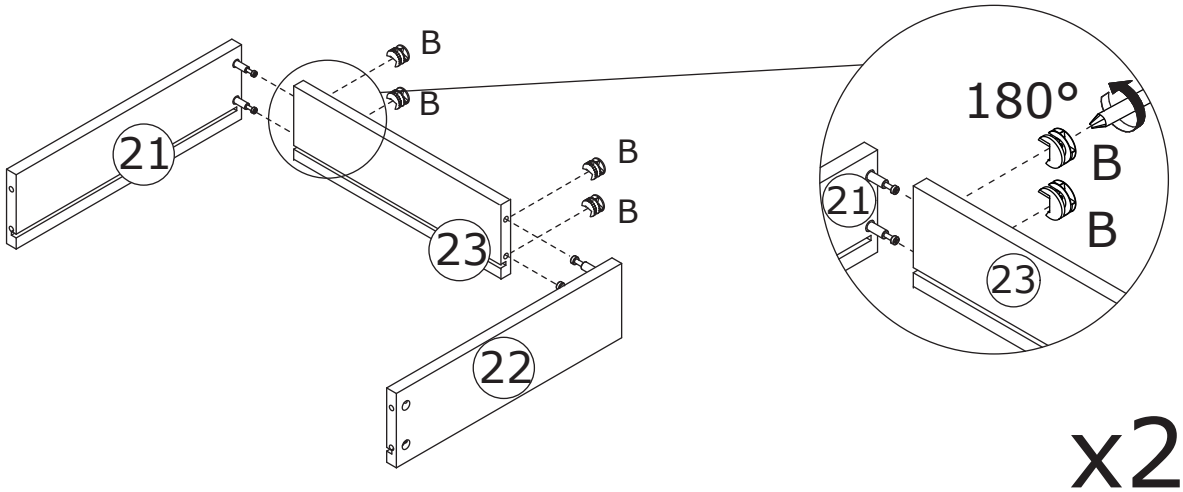

x2

37

Insert bottom board 24 along available grooves as shown.

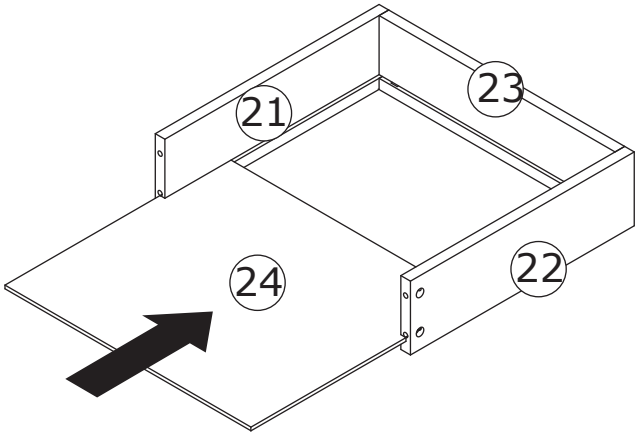

x2

38

B x 8	J x 2	
		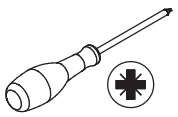
∅15 x 11 mm	∅15 x 11 mm	

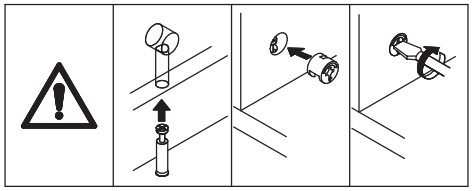

Connect board 25 to board 21 and 22, add cam lock(B) into and turn clockwise to tighten as shown.
Fix knob(J) to board 25 as shown.

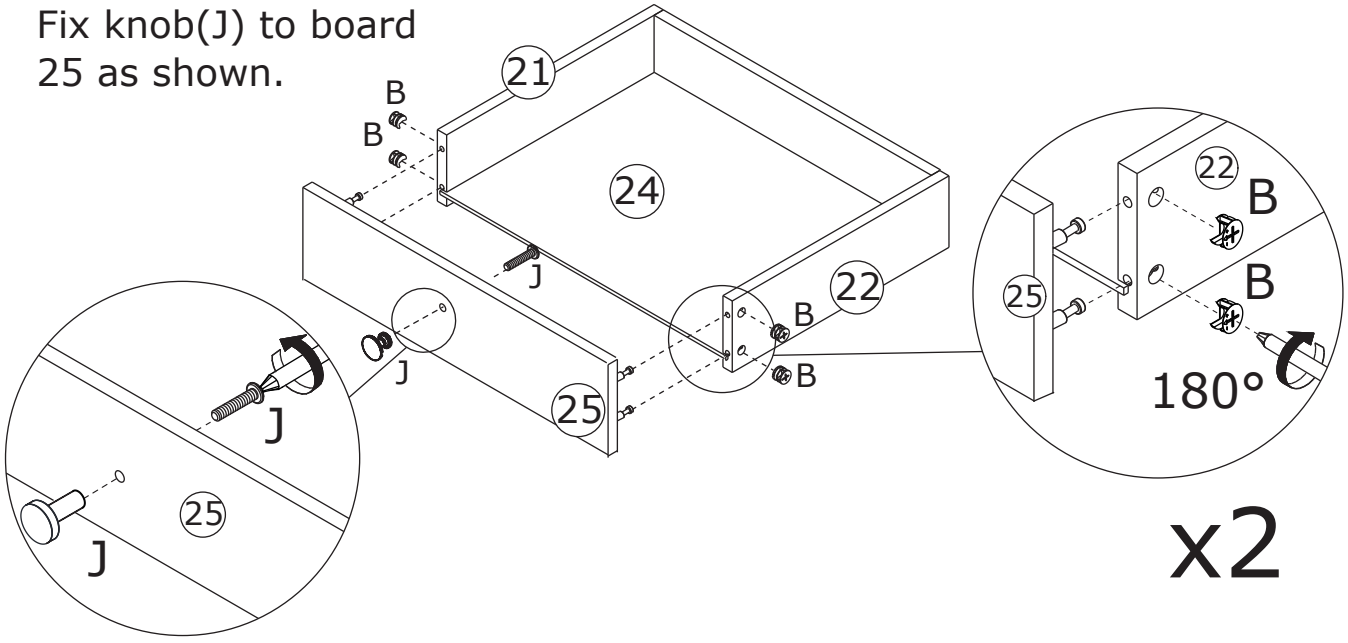

x2

39

D x 2

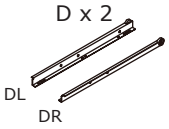

L=350 mm

E x 8



∅3 x 12 mm

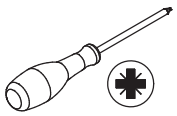

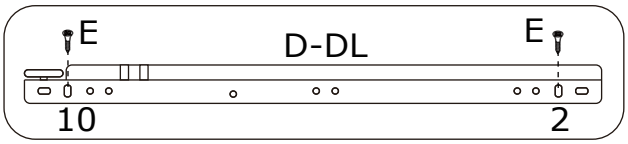

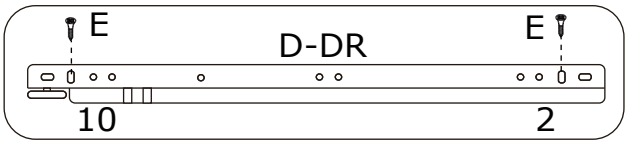

Fix runner(DL) and (DR) to board 21 and 22 with screw(E) as shown.

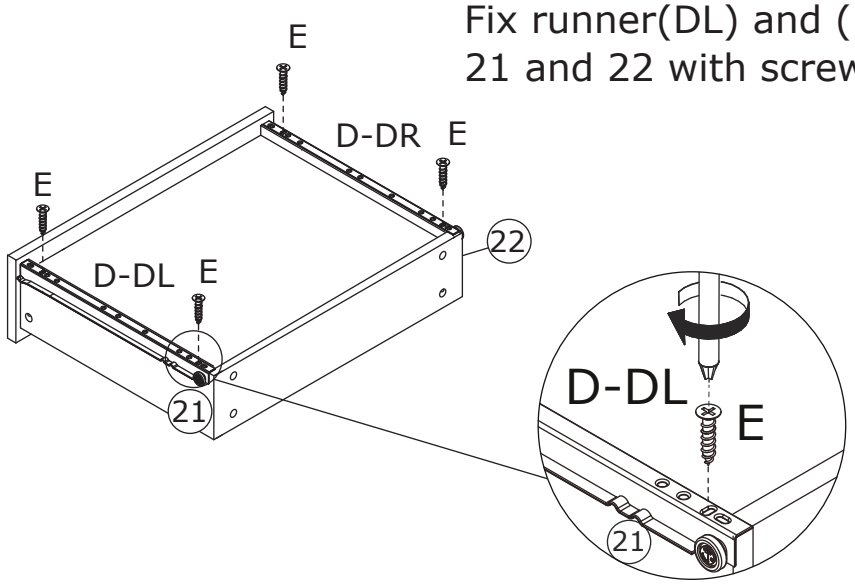

x2

40

L x 72

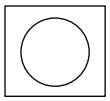

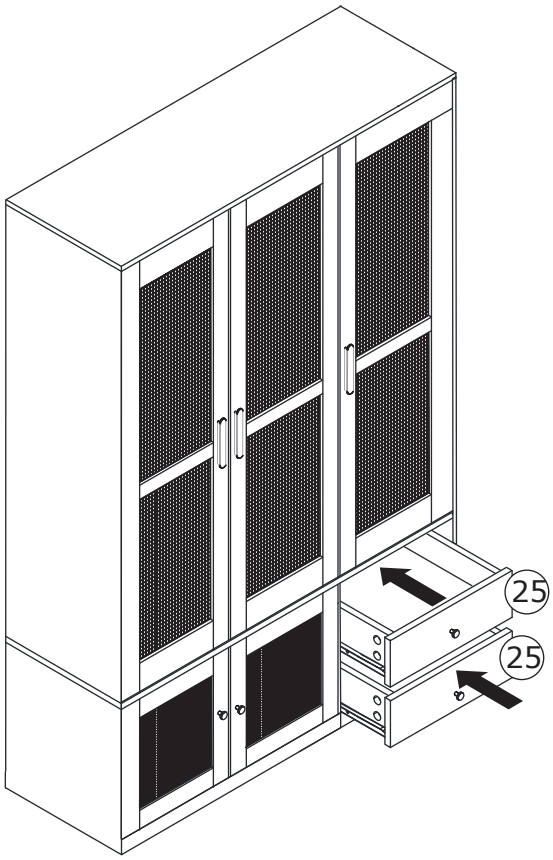

Insert drawers in as shown.

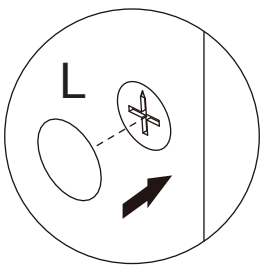

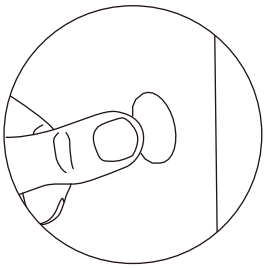

41

M x 1

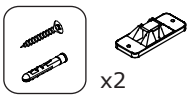

x2

∅4 x 40 mm



Drill holes on your wall,
knock part(M) into.

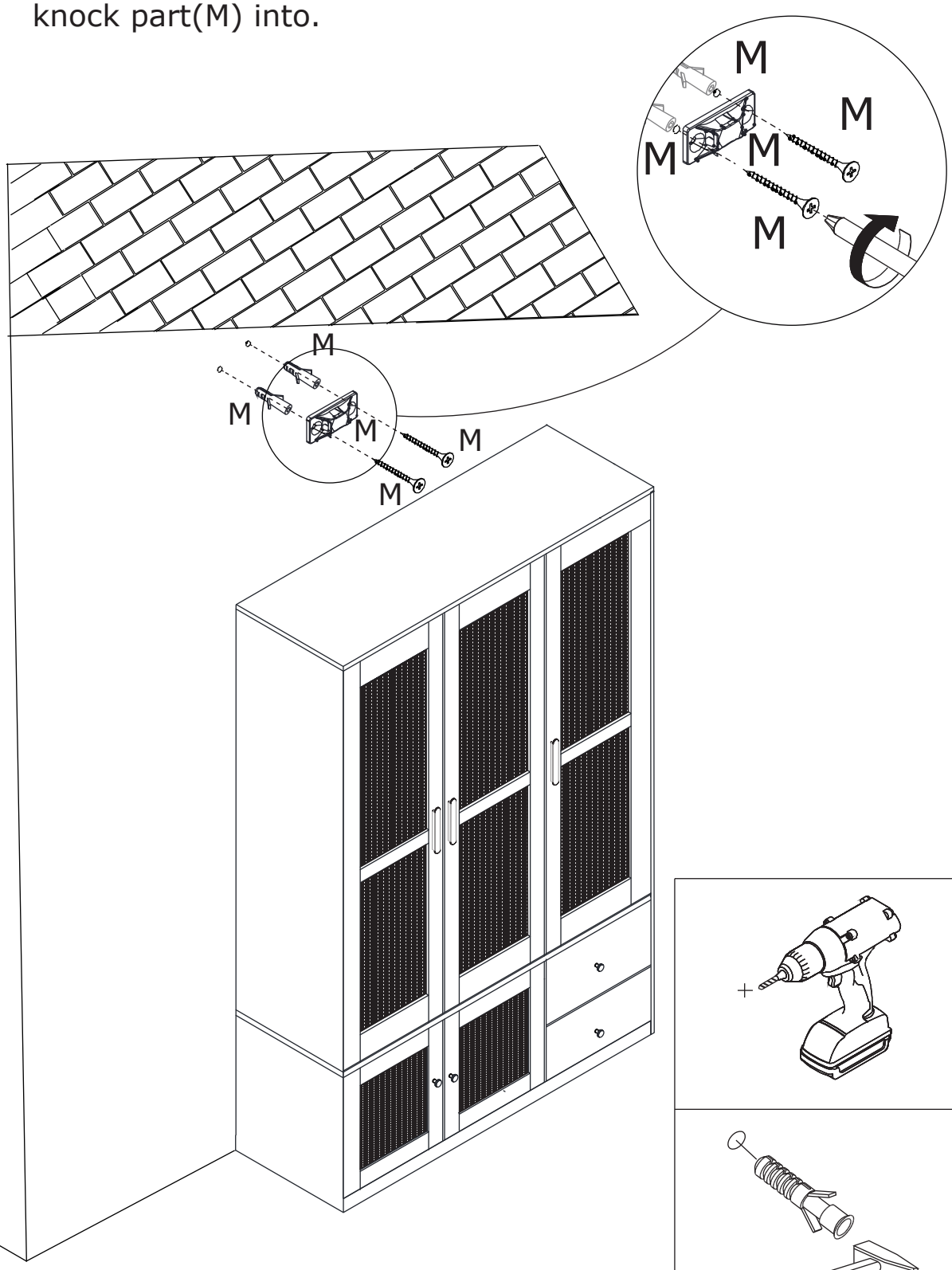

42

M x 1



Install anti-tipping device as shown.

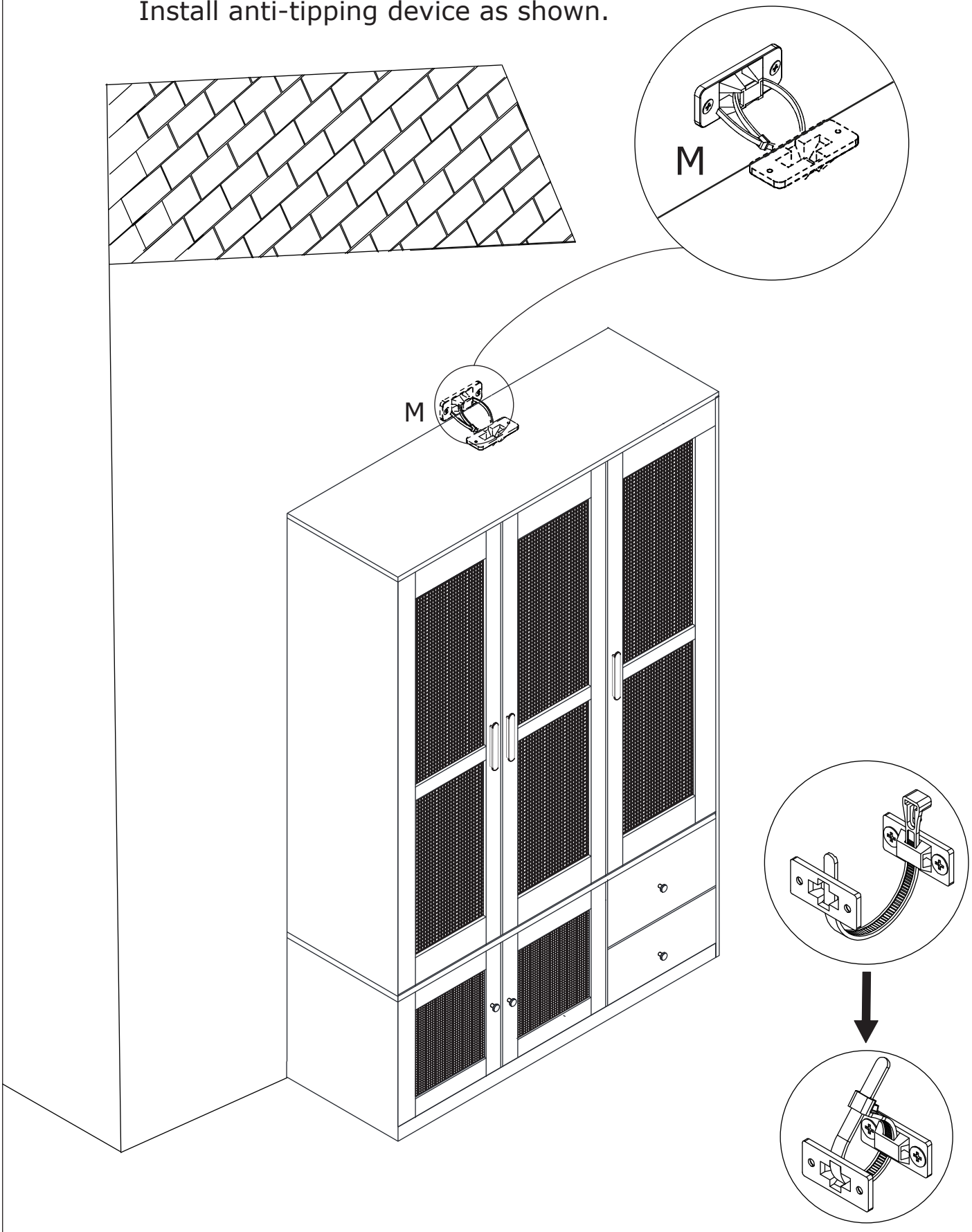

43

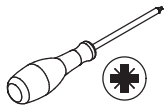

If doors are still not aligned if the hinges are properly correctly, please watch the video.

https://youtu.be/n0Lb36SoODM

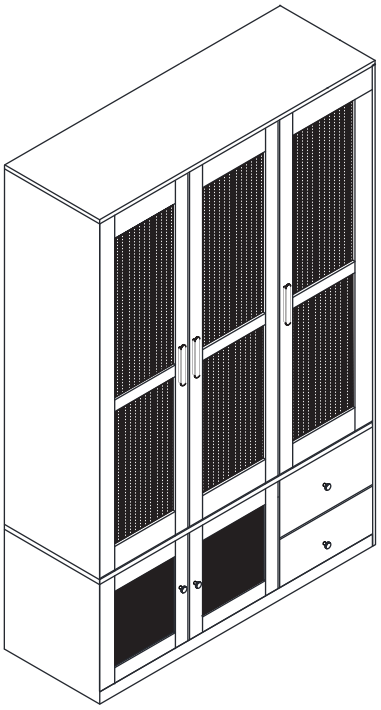

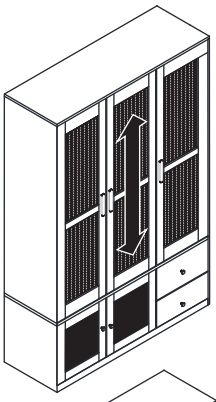

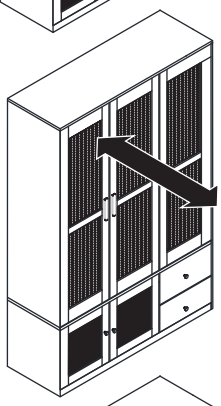

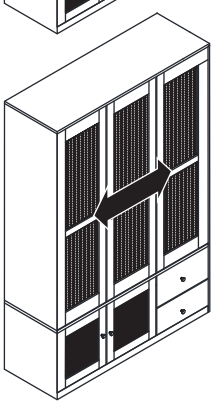

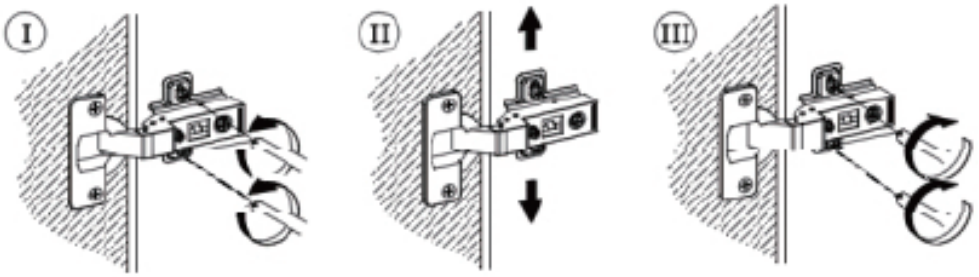

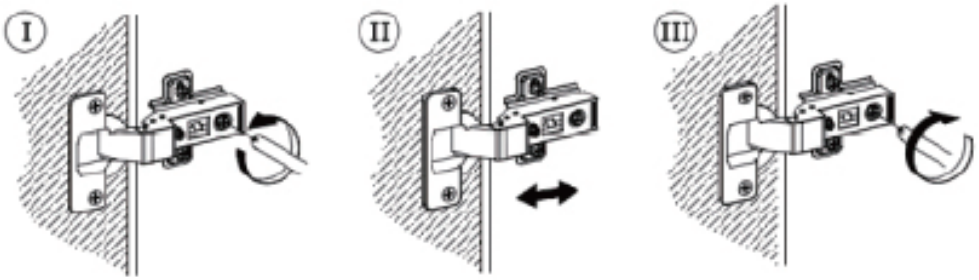

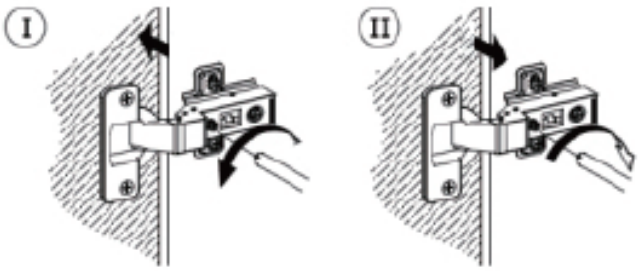

WARRANTY

WARRANTY CLAIMS

- There is a 30-day warranty for broken furniture or any other problems that do not work properly. The warranty will start from the date of purchase which must be verified by proof of purchase.

- Before making a claim, we may be able to answer your query, simply call us. Please leave your purchase order number, along with some details of the problem, if you want a replacement part. We will arrange within 48 hours. If there is out of stock, we will reply with a shipping date.

- The product must be used in accordance with the instructions provided. For health reasons.

- For other reasons, if the furniture needs to be returned, it must be cleaned and dried and operated within 30 days of receipt.

Type of Warranty Claim

- Failure to follow the furniture instructions will invalidate the warranty. Attention please.

- Does not include damage during installation, but includes damage during transportation.

Scope of responsibility

- Shall not bear any responsibility for misuse or user damage and / or loss of parts during the installation of furniture.

- After using, the damage and scratches of the furniture are not covered by the warranty.

The Warranty Relates to All Bought in The Us and Covers The Following Areas

- Sheet parts: 1 month from the date of purchase.

- Electrical parts: 1 month from the date of purchase.

RETURNS

CHANGED YOUR MIND AND NEED TO RETURN YOU ITEM?

PLEASE FOLLOW THE BELOW INSTRUCTIONS:

- If you have purchased and have simply changed your mind, follow the retailer's instructions for returns.

DEFECTIVE ITEMS

- If your item is defective in any way, i.e. it doesn't work but you can't identify why, in the first instance, please call us.

DAMAGED ITEMS

- If you receive an order with obvious shipping damage from the retailer, then we suggest the delivery is refused. If the delivery has been accepted and then shipping damage is found, please follow the specific instructions advised by the retailer.
  In all circumstances please save all packaging material and paperwork for the order. Please be aware that if you dispose of packaging material or attempt to return the merchandise without contacting the fulfiller, you jeopardise your chances of making a claim, and you may not receive a credit for the return.

AFTER-SALES CONTACT

 feedbackstation@163.com

 (303)800-6387

Wardrobe

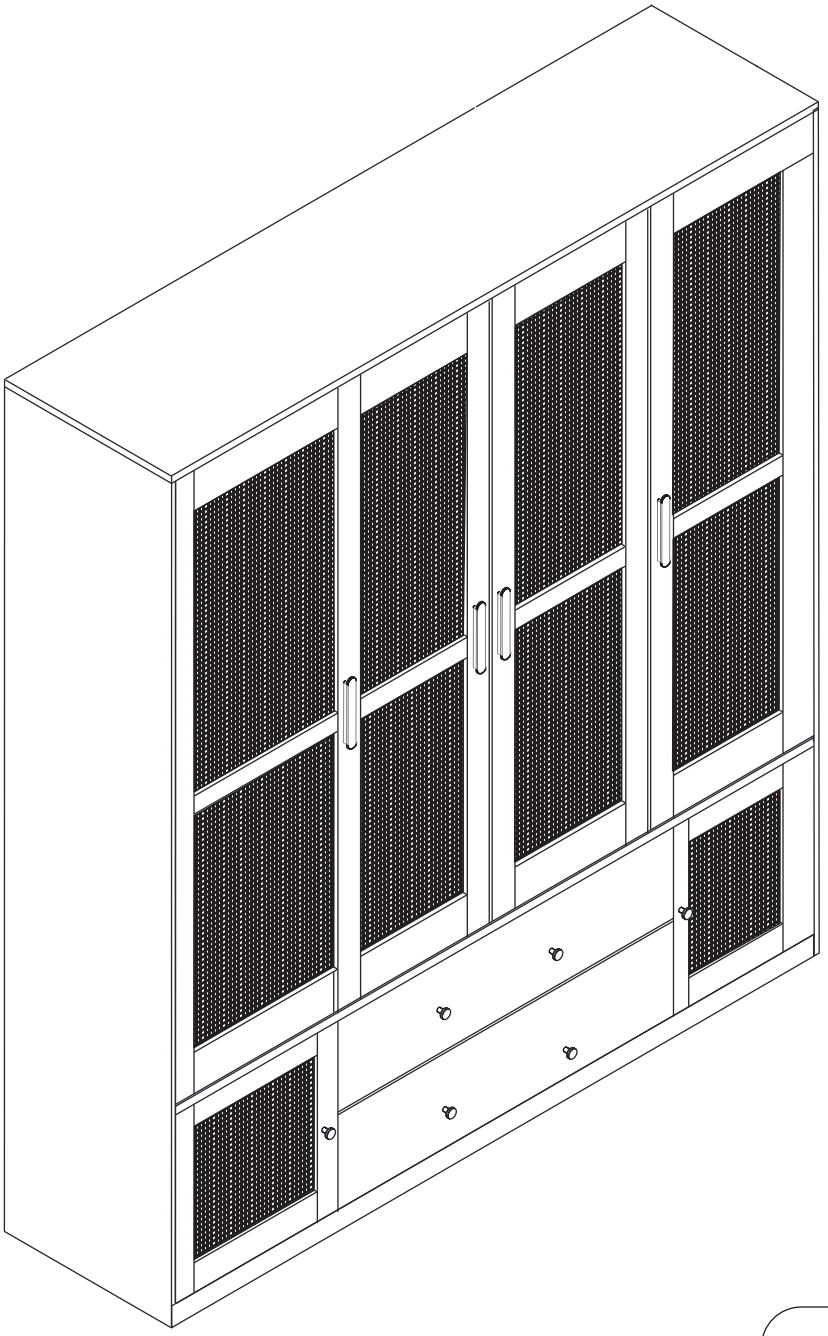

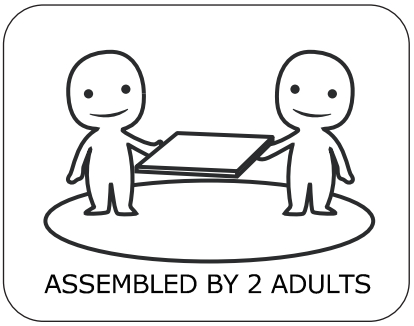

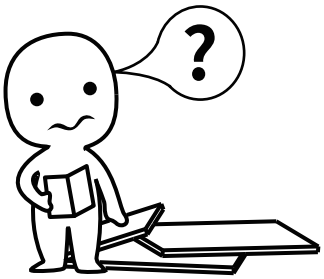

IMPORTANT INFORMATION!

please read the entire manual before starting to assemble and/or using this product.follow the manual thoroughly and keep it for further reference.

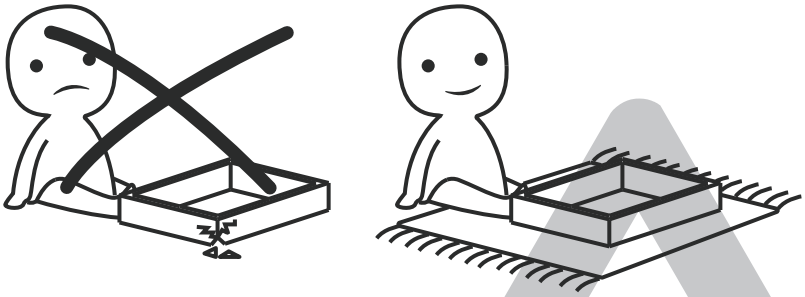

AVOID SCRATCHES!

In order to avoid scratching this furnuture should be assembled on a soft layer-could be a rug.

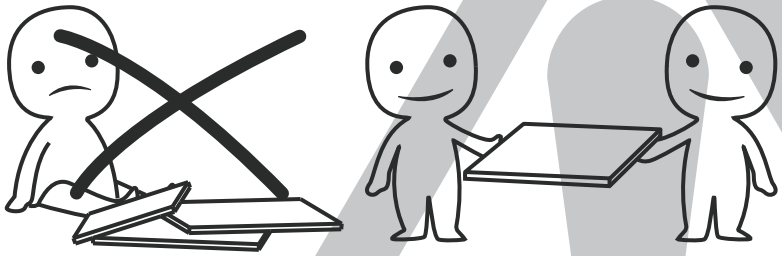

IMPROVE EFFICIENCY !

Try to find a partner to install with you, which can speed up the installation efficiency and shorten the time.

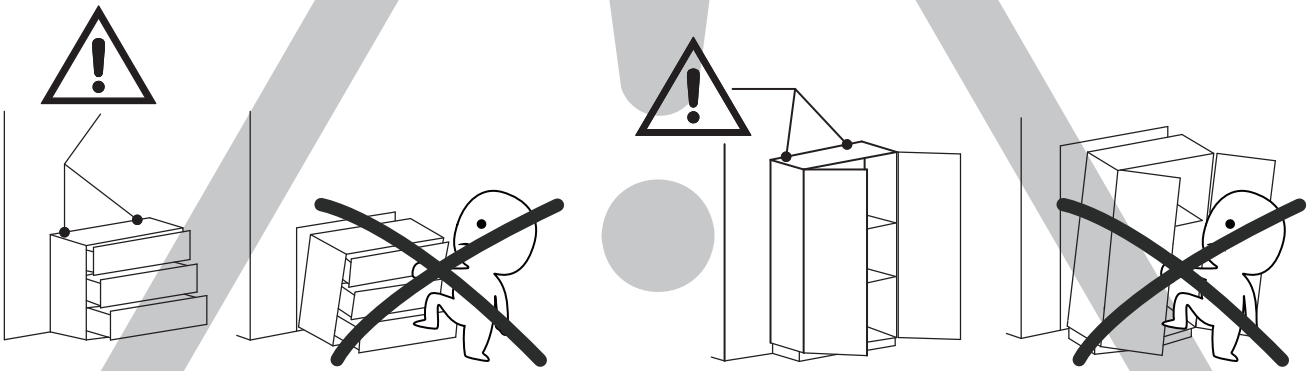

ANTI-TOPPLE WARNING !

Overturned furniture can cause serious or fatal crush injuries. To prevent tipping over, be sure to use the wall attachment, if not included with this product. Please purchase the wall attachment that fit your wall. If unsure, seek professional advice. Please read and follow each step of the instructions carefully.

IMPORTANT !

It is important that any product which is assembled using any kind of screw is re-tightened 2 weeks after assembly,and once every 3 months - in order to assure stability through-out the lifespan of the product.

For regular maintenance and cleaning of the product, for the frame, please use a rag dipped in neutral detergent to fully wipe it, and then dry it with a clean rag.For glass materials, wipe with a rag dampened with water glass cleaner, and then dry with a dry rag.

Do not use an electric screwdriver, and do not use too much force when installing, because the board is easy to break.

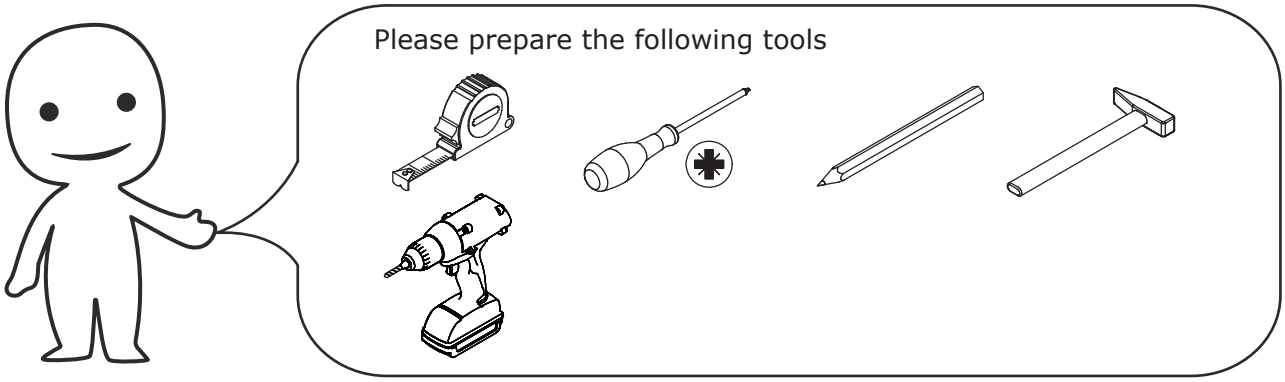



When installing, please carefully confirm whether each screw corresponds to the manual, accessories with similar shapes can be distinguished by size

A x 76+5	B x 68+5	C x 50+5	D x 2	E x 16+1
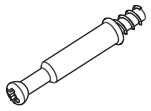		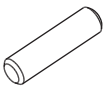	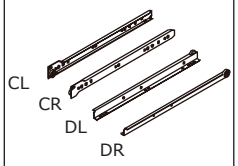	
∅6 x 35 mm	∅15 x 11 mm	∅8 x 30 mm	L = 350 mm	∅3 x 12 mm

F x 2	G x 8	H x 10	J x 6	L x 78+5
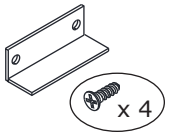		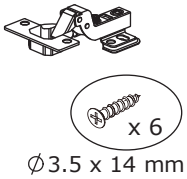	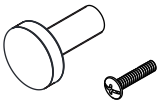	
∅3 x 12 mm	∅4 x 30 mm	∅3.5 x 14 mm	∅4 x 22 mm	

M x 1	N x 2	P x 38+3	Q x 4	R x 24+2
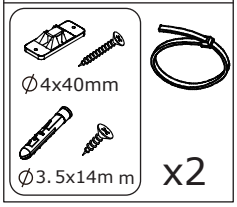	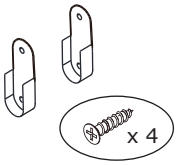		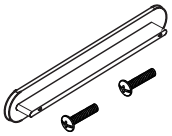	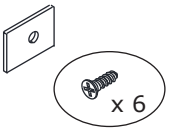
	∅3.5 x 14 mm	∅3 x 12 mm	∅4 x 18 mm	∅3 x 12 mm

S x 6	T x 8
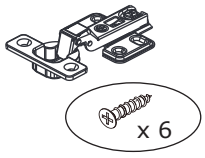	
∅3.5 x 14 mm	∅15 x 9.5 mm

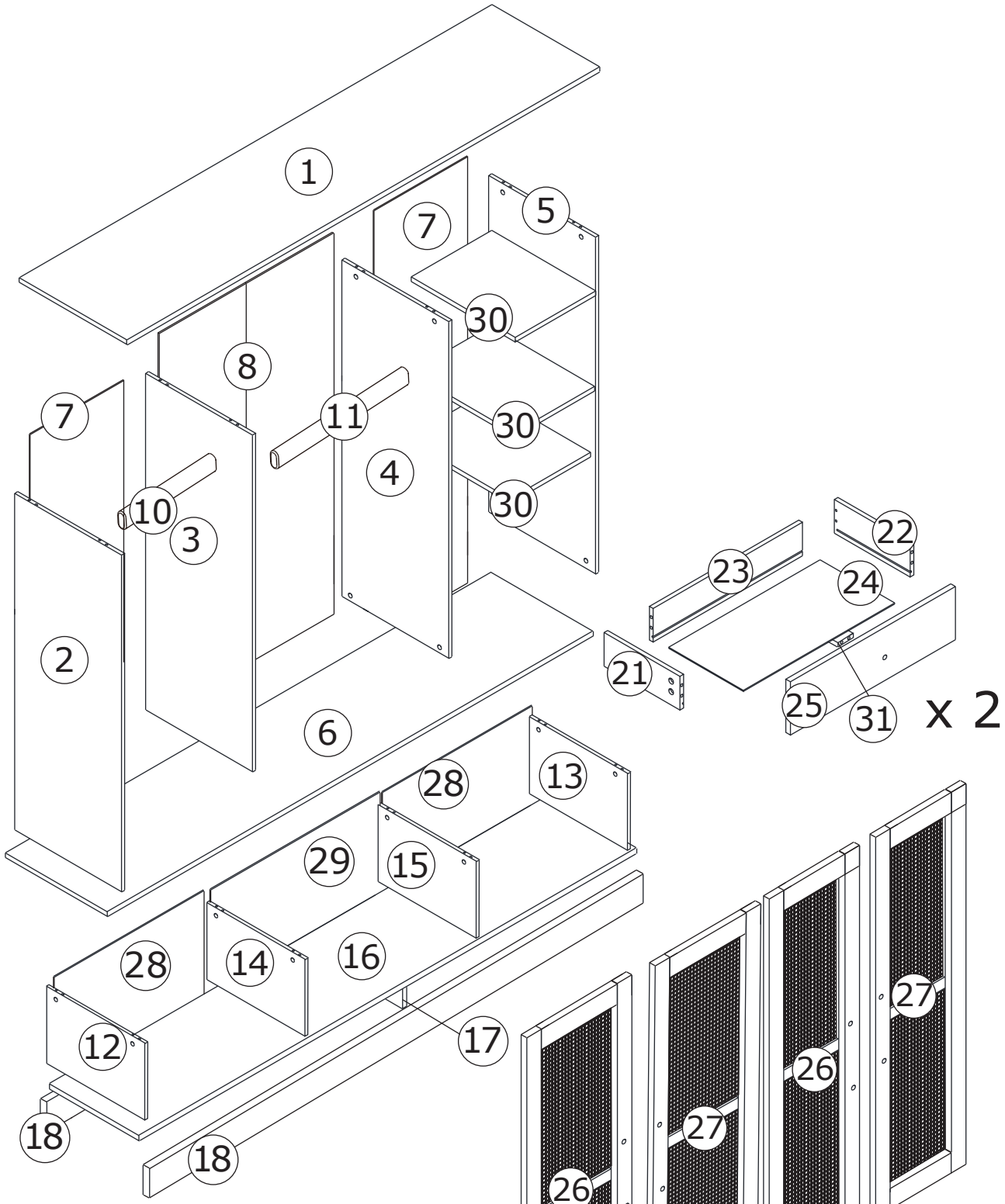

⚠WARNING





Children have died from furniture tipover.To reduce the risk of furniture tipover:

- ALWAYS install tipover restraint provided.
- NEVER put a TV on this product.
- NEVER allow children to stand,climb or hang on drawers,doors,or shelves.
- NEVER open more than one drawer at a time.
- Place heaviest items in the lowest drawers.

This is a permanent label.
Do not remove!

1

A x 2



∅6 x 35 mm

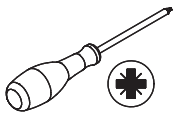

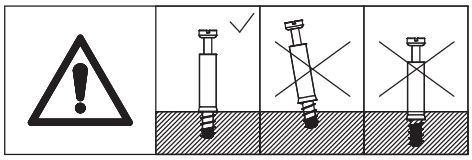

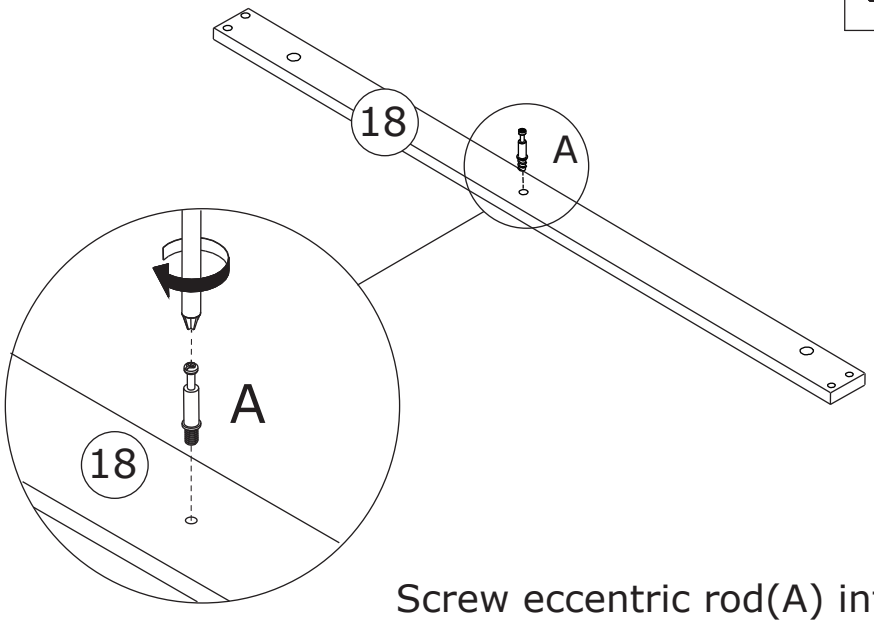

x 2

Screw eccentric rod(A) into board 18 at first.

2

B x 2



∅15 x 11 mm

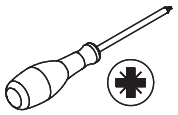

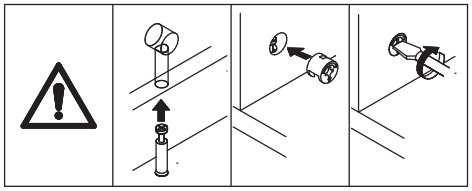

Connect board 17 to board 18, add cam lock(B) into board 17 and turn clockwise to tighten as shown.

3

A x 6	C x 6	
		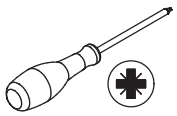
∅6 x 35 mm	∅8 x 30 mm	

Screw eccentric rod(A) and insert wooden dowel(C) into board 16 as shown.

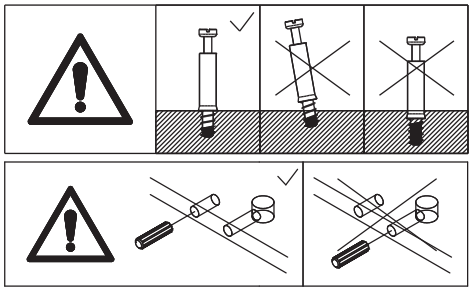

4

B x 6	
	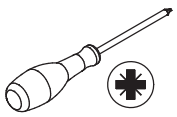
∅15 x 11 mm	

Attach the part to board 16, add cam lock(B) into board 17,18 and turn clockwise to tighten as shown.

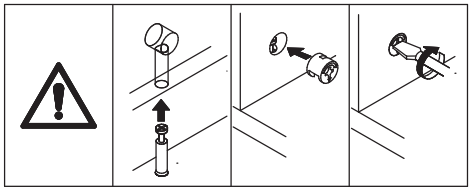

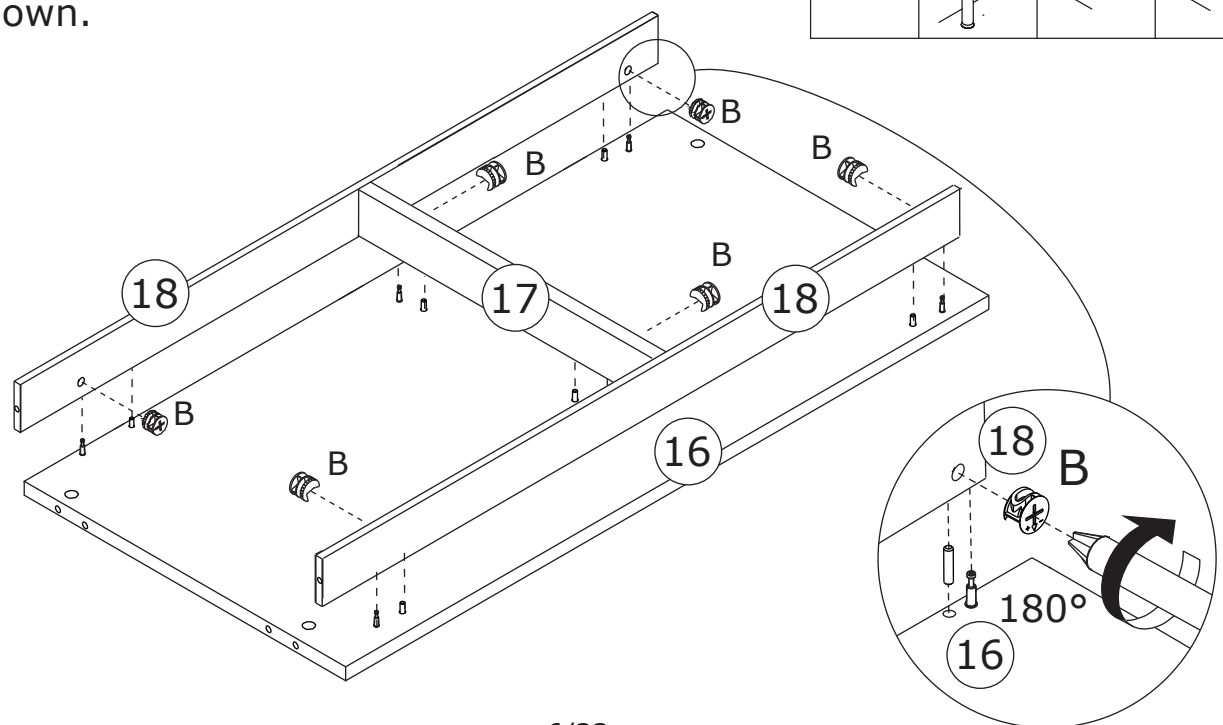

5

A x 4	C x 4	
		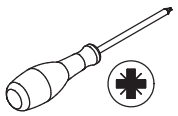
∅6 x 35 mm	∅8 x 30 mm	

Screw eccentric rod(A) and insert wooden dowel(C) into board 16 as shown.

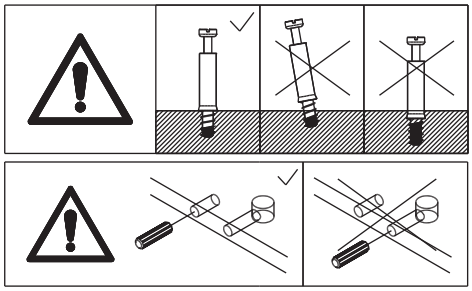

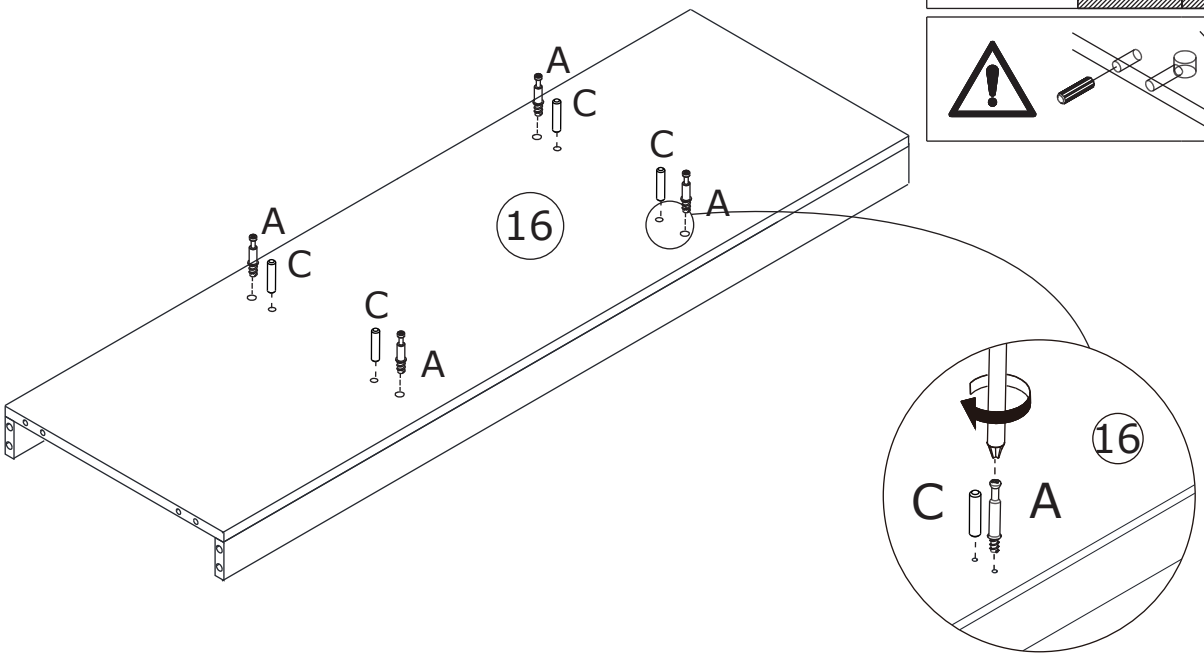

6

A x 6	C x 2	
		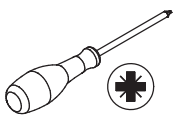
∅6 x 35 mm	∅8 x 30 mm	

Screw eccentric rod(A) and insert wooden dowel(C) into board 12 as shown.

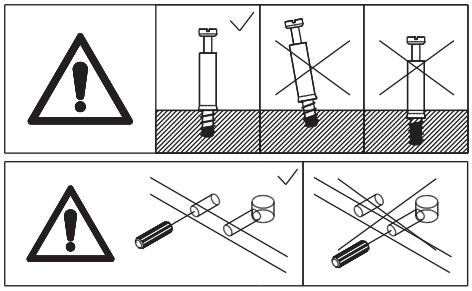

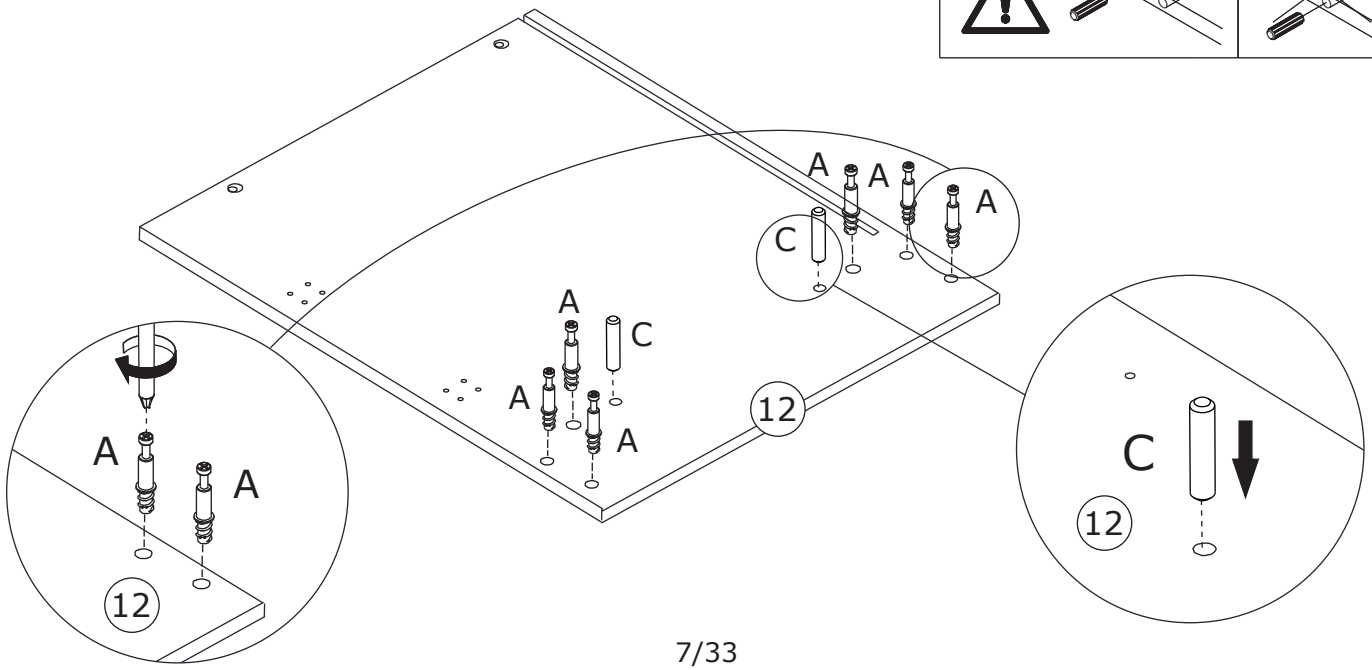

7

E x 4	D x 2	
∅3 x 12 mm	CL L = 350 mm	

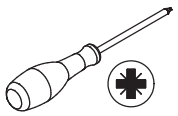

Fix rail(CL) to board 14 with screw(E) as shown.

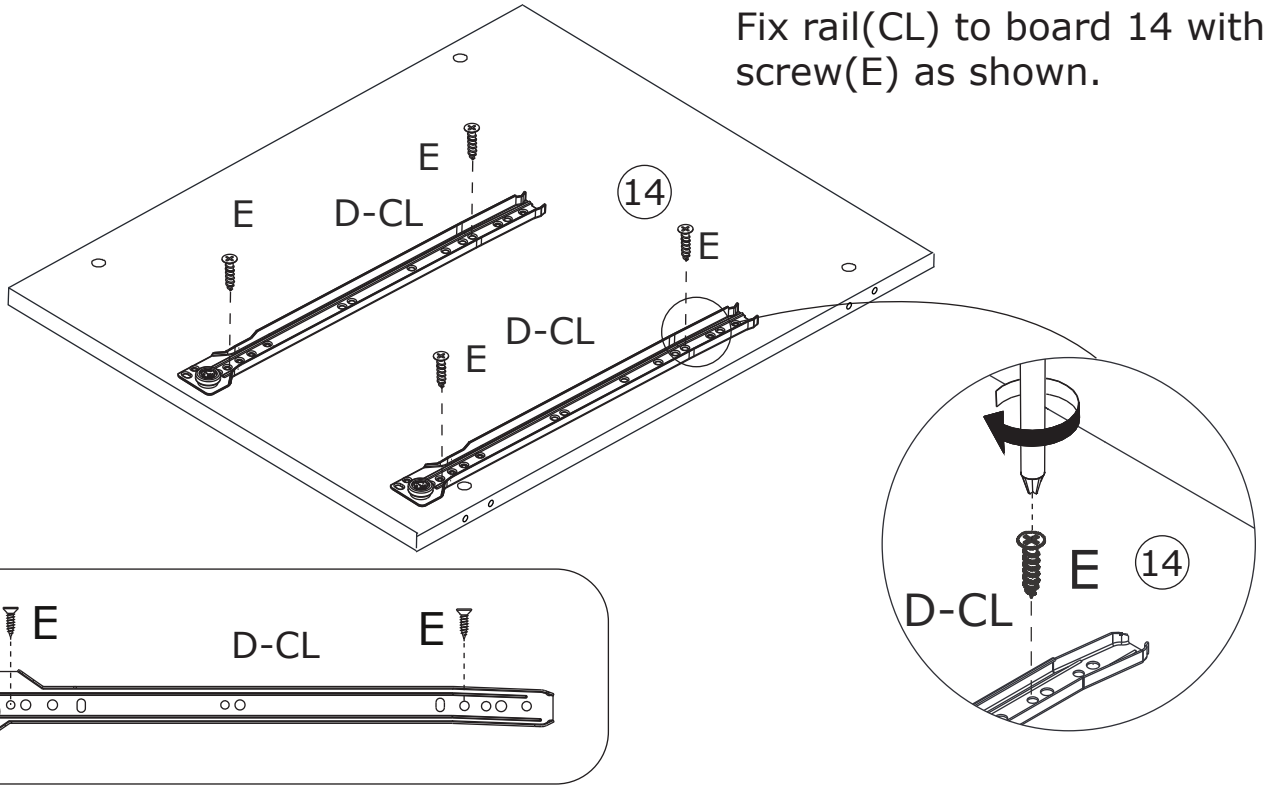

8

E x 4	D x 2	
∅3 x 12 mm	CR L = 350 mm	

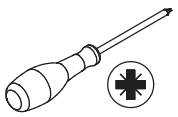

Fix rail(CR) to board 15 with screw(E) as shown.

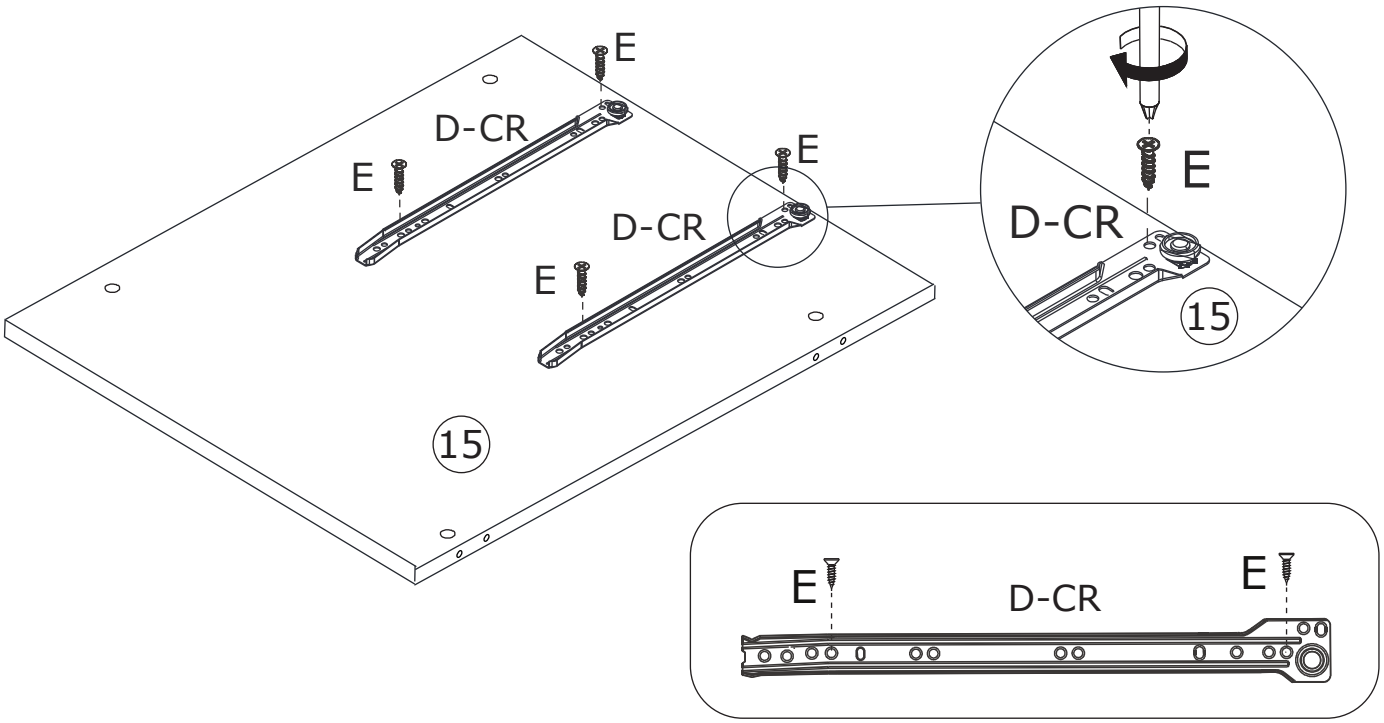

9

A x 6	C x 2	
		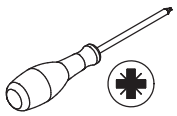
∅6 x 35 mm	∅8 x 30 mm	

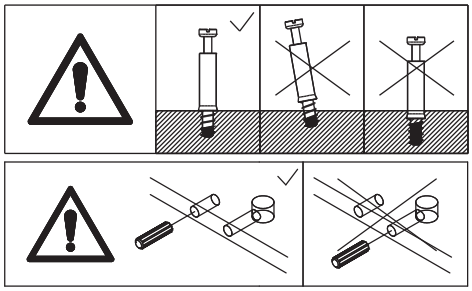

Screw eccentric rod(A) and insert wooden dowel(C) into board 13 as shown.

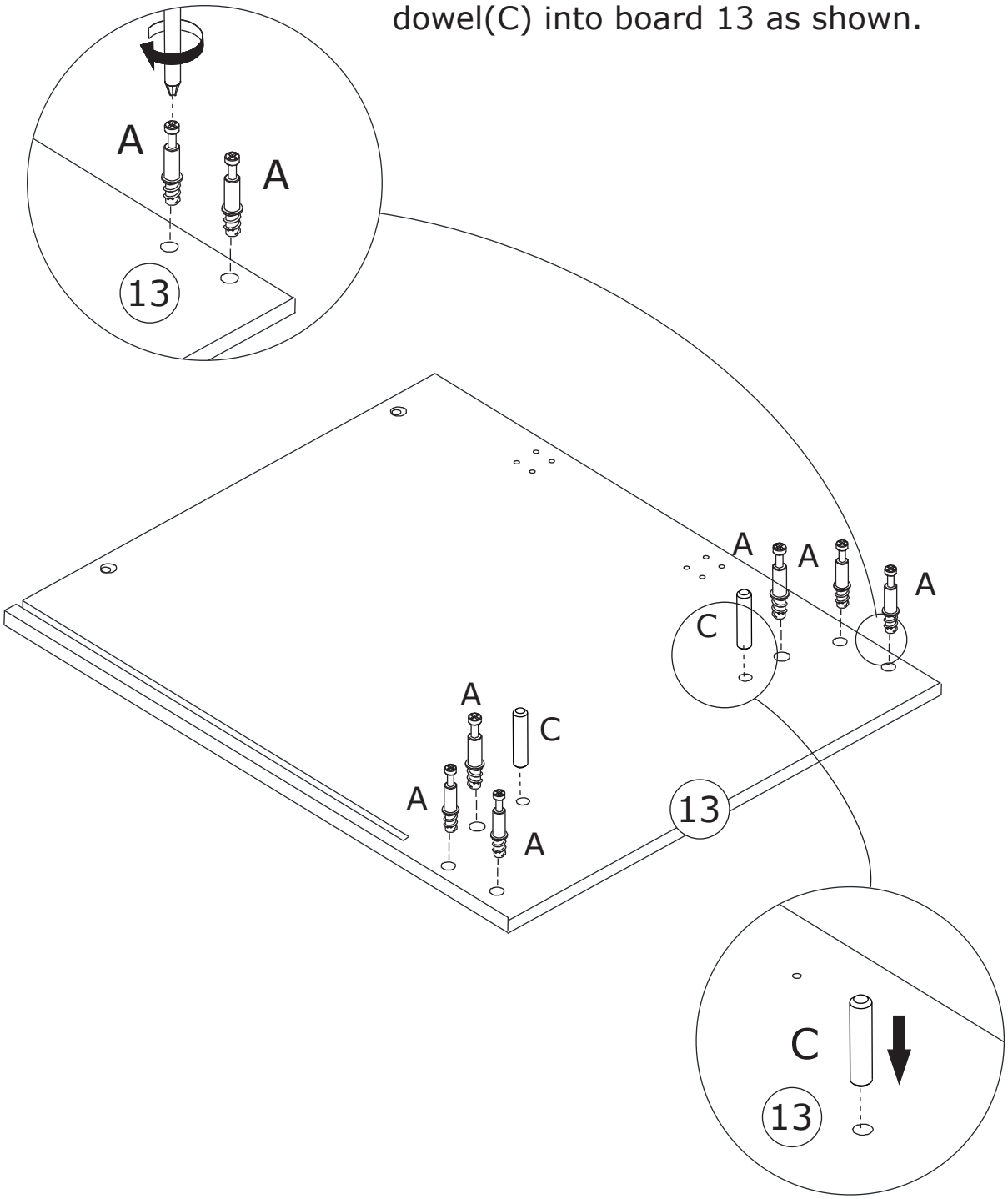

10

B x 6



∅15 x 11 mm

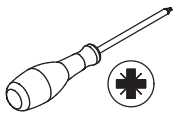

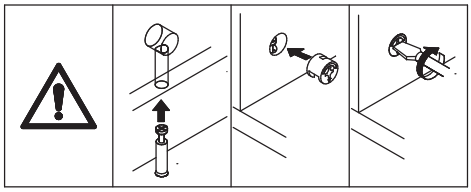

Attach board 12 to board 16 and 18, add cam lock(B) into board 16,18and turn clockwise to tighten as shown.

11

B x 6



∅15 x 11 mm

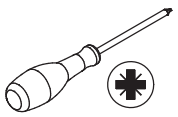

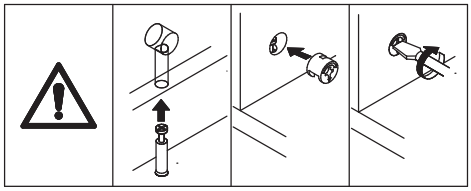

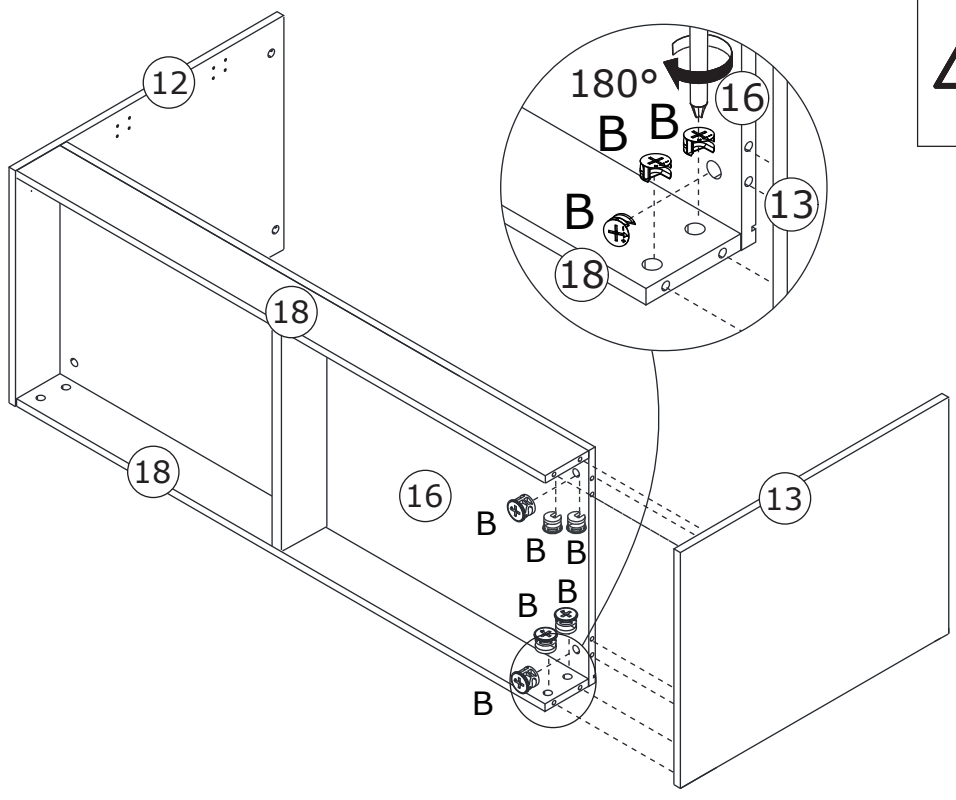

Attach board 13 to board 16 and 18, add cam lock(B) into board 16,18 and turn clockwise to tighten as shown.

12

B x 4



∅15 x 11 mm

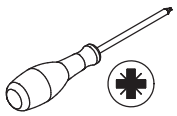

Attach board 14 and 15 to board 16, add cam lock(B) into board 14,15 and turn clockwise to tighten as shown.

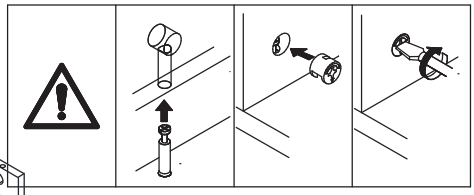

13

A x 8



∅6 x 35 mm

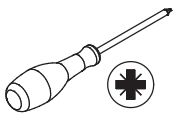

Screw eccentric rod(A) and insert wooden dowel(C) into board 6 as shown.

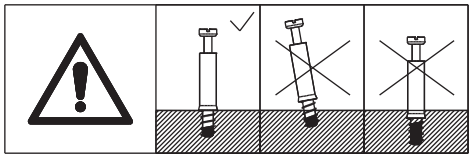

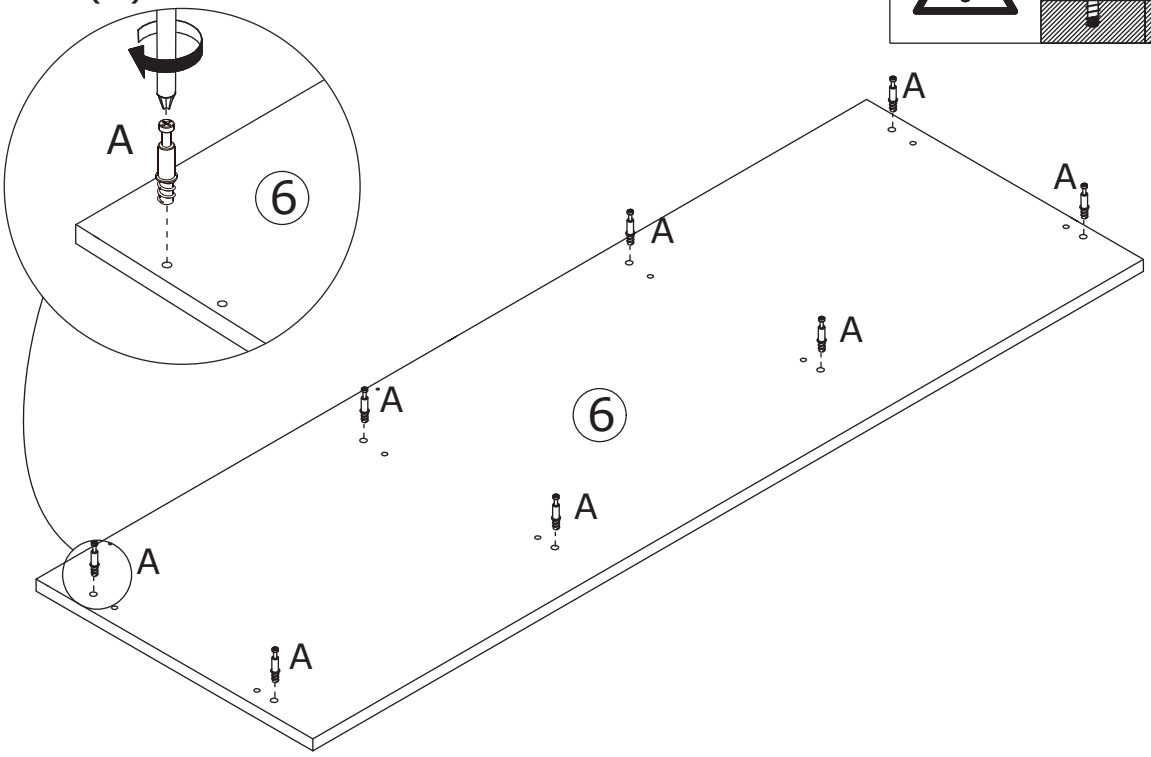

14

B x 8	C x 8	
∅15 x 11 mm	∅8 x 30 mm	

Attach board 6 to board 12, 14, 15 and 13 using wooden dowel(C), add cam lock(B) into and turn clockwise to tighten as shown.

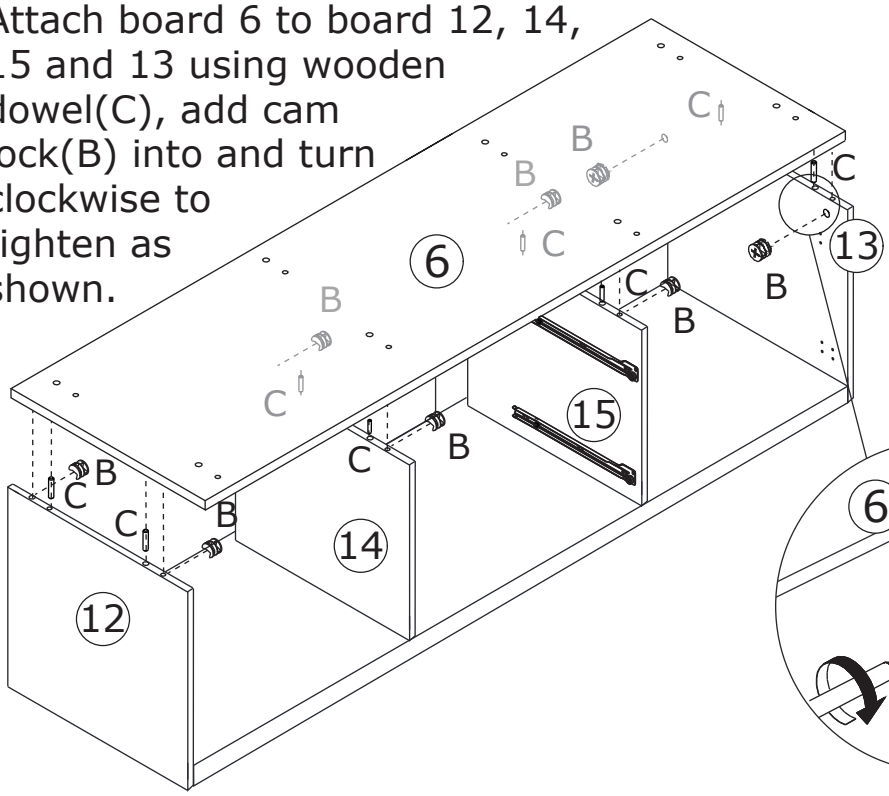

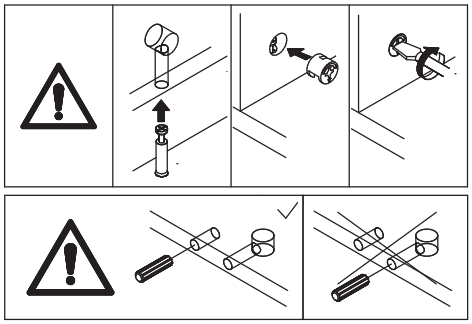

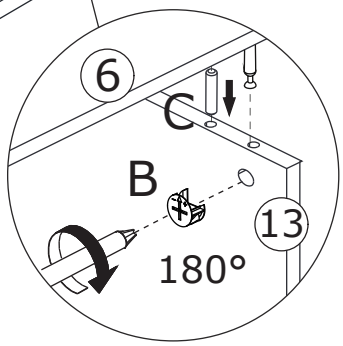

15

A x 8	C x 8	F x 1	
∅6 x 35 mm	∅8 x 30 mm	x 2 ∅3 x 12 mm	

Screw eccentric rod(A) and insert wooden dowel(C) into board 6 as shown.
Fix part(F) to board 6 as shown.

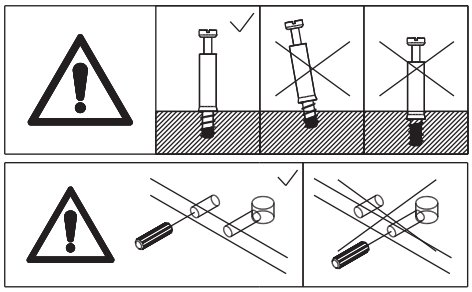

16

B x 4



∅15 x 11 mm

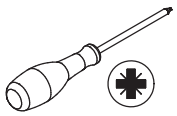

Attach board 2 and 3 to board 6, add cam lock(B) into and turn clockwise to tighten as shown.

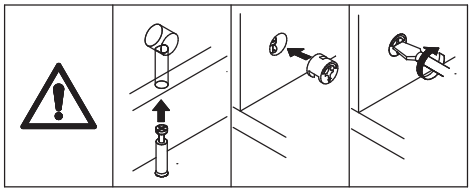

17

A x 6



∅6 x 35 mm

C x 6



∅8 x 30 mm

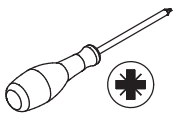

Screw eccentric rod(A) and insert wooden dowel(C) into board 4 as shown.

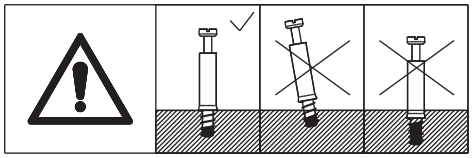

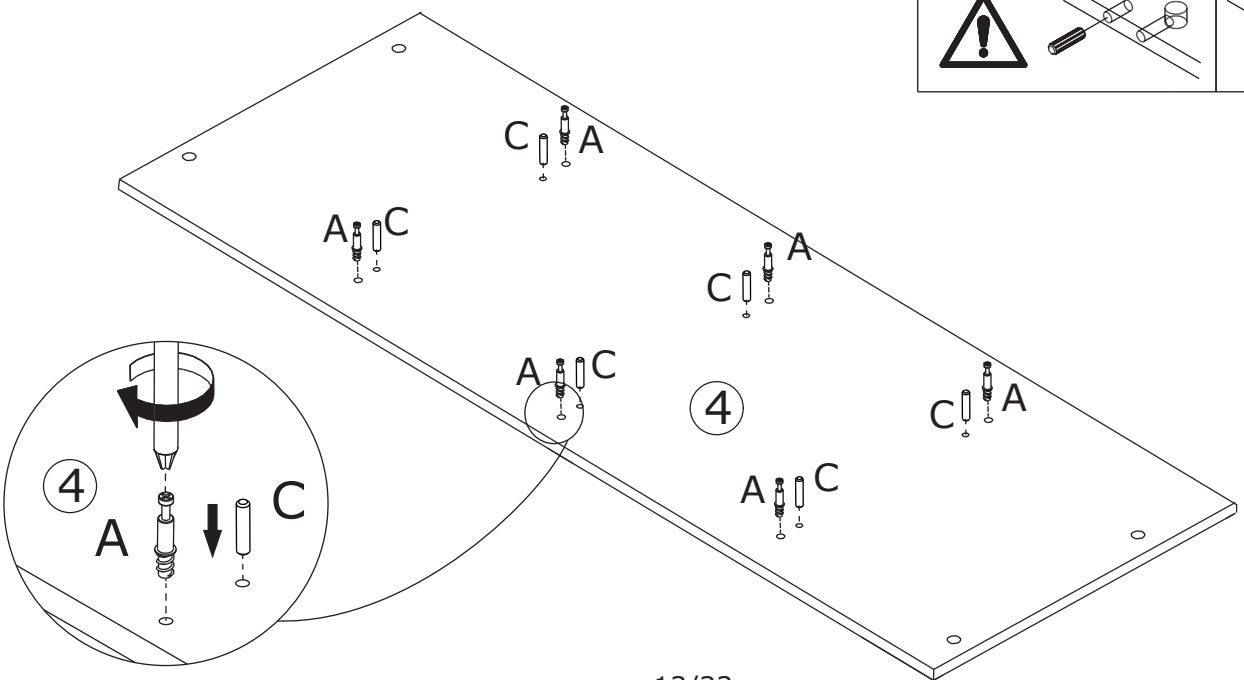

18

A x 6



∅6 x 35 mm

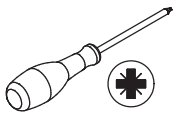

Screw eccentric rod(A) into board 5 as shown.

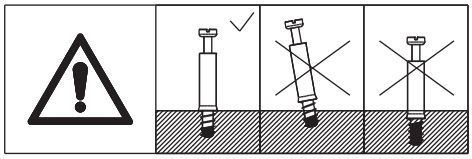

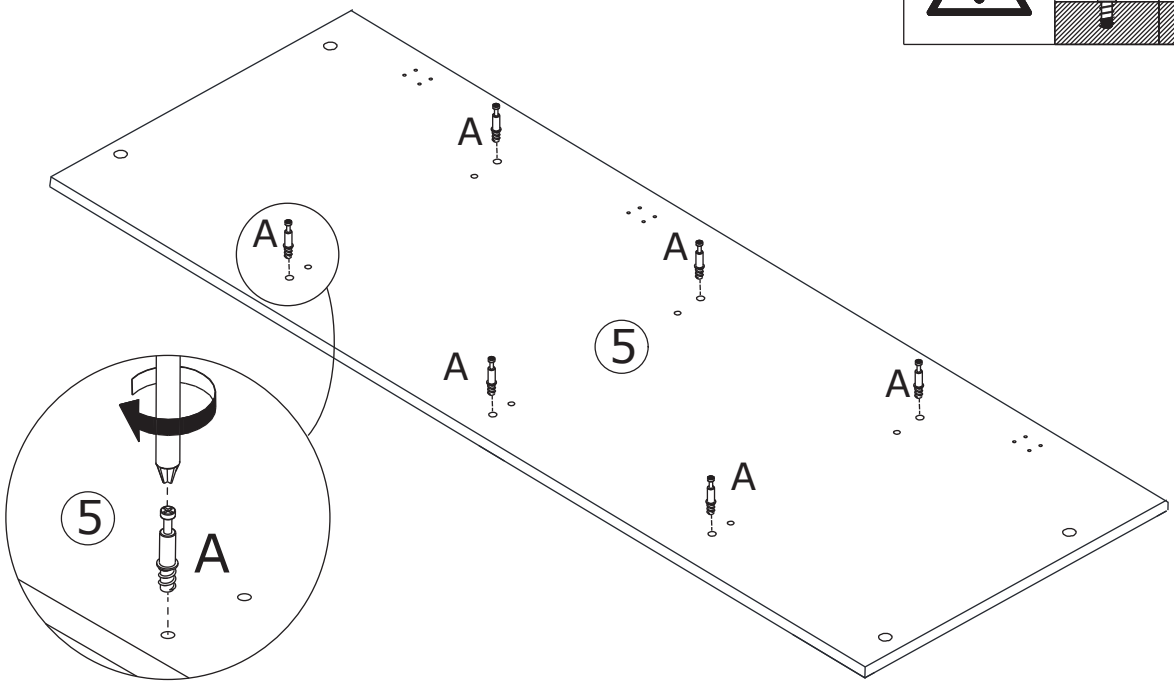

19

B x 6



∅15 x 11 mm

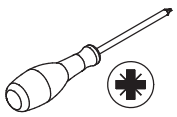

Attach board 30 to board 4, add cam lock(B) into and turn clockwise to tighten as shown.

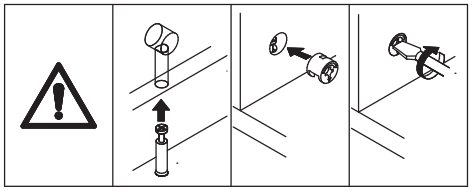

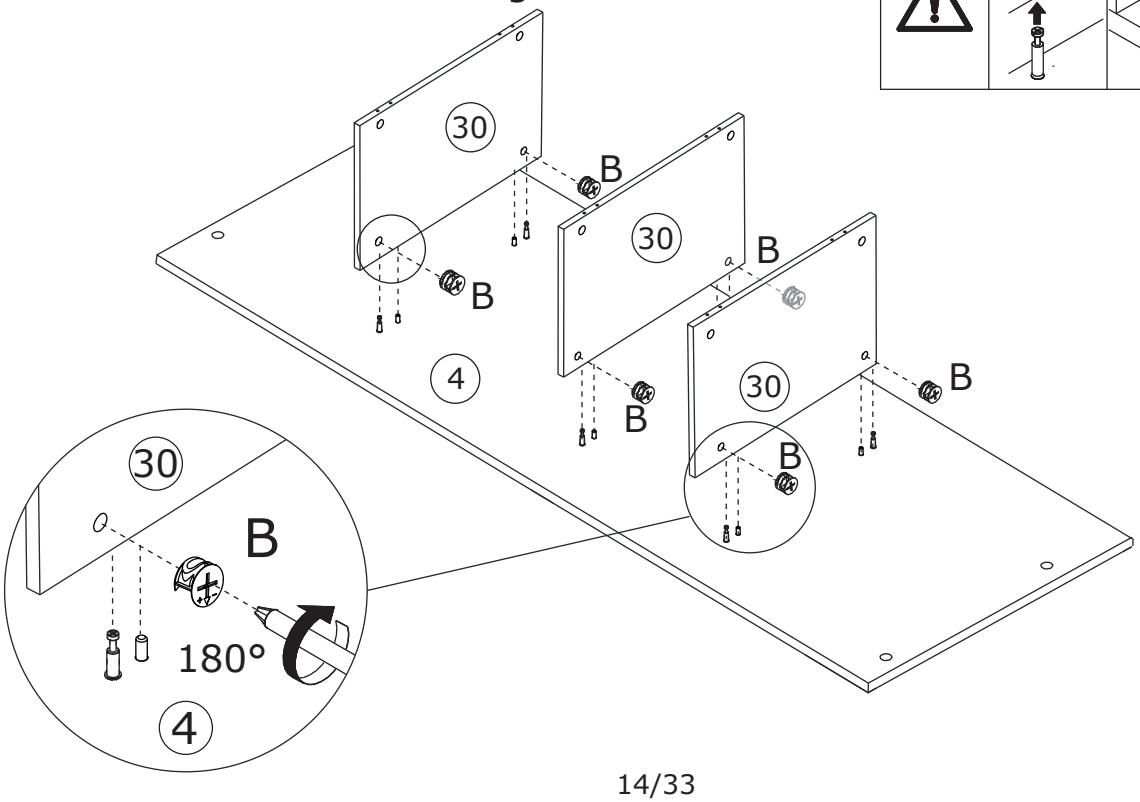

20

B x 6	C x 6	
∅15 x 11 mm	∅8 x 30 mm	

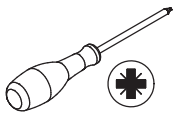

Attach board 5 to board 30, add cam lock(B) into and turn clockwise to tighten as shown.

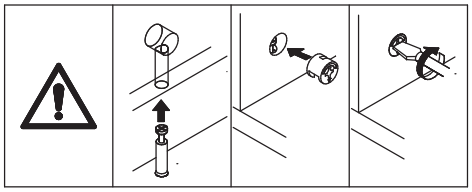

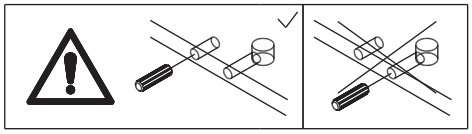

21

B x 4	
∅15 x 11 mm	

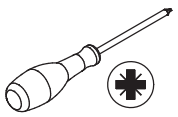

Attach the part to board 6, add cam lock(B) into and turn clockwise to tighten as shown.

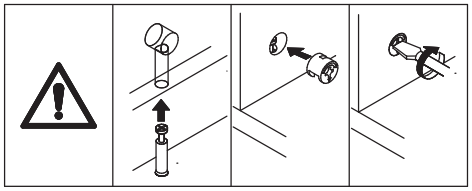

22

M x 1

x 2

∅3.5 x 14 mm

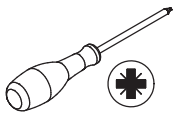

Fix part(M) to board 1 as shown.

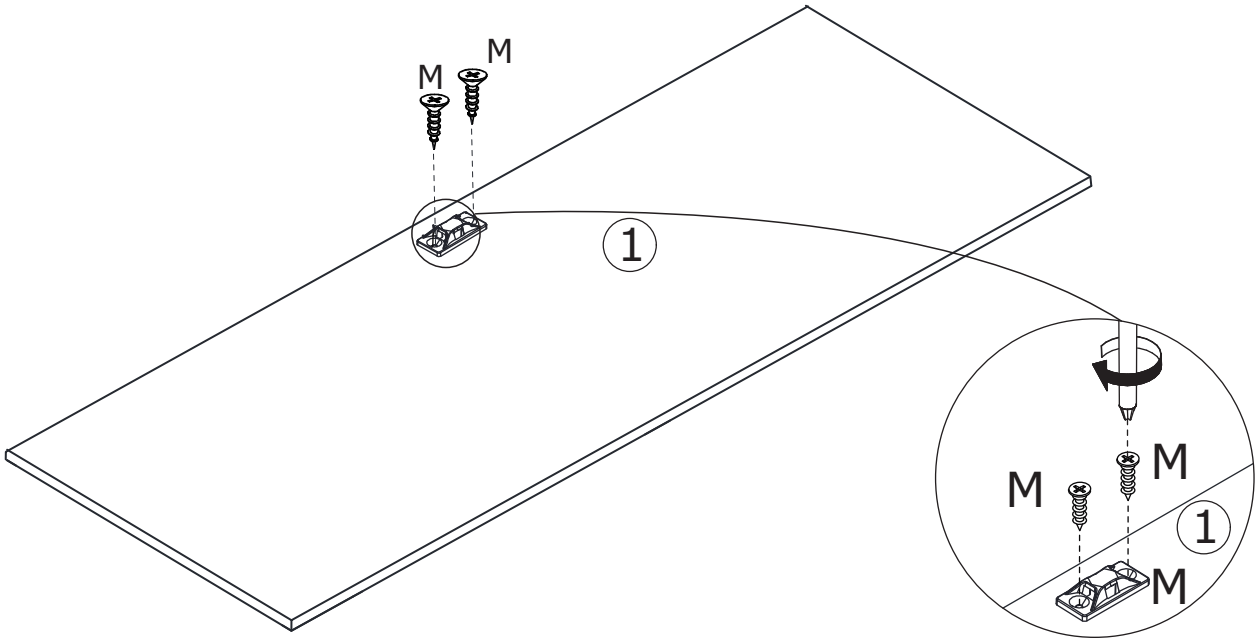

23

A x 8

∅6 x 35 mm

C x 8

∅8 x 30 mm

F x 1

x 2

∅3 x 12 mm

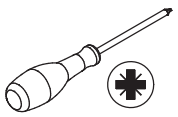

Screw eccentric rod(A) and insert wooden dowel(C) into board 1 as shown.
Fix part(F) to board 1 as shown.

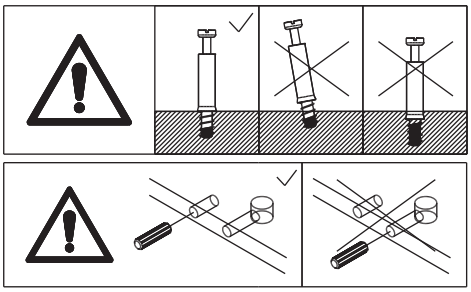

24

B x 8



∅15 x 11 mm

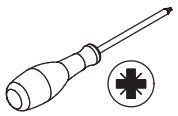

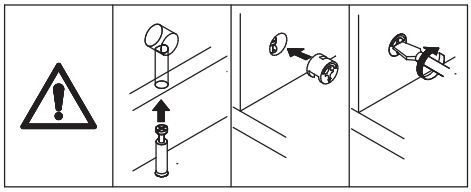

Cover board 1 to top, add cam lock(B) into and turn clockwise to tighten as shown.

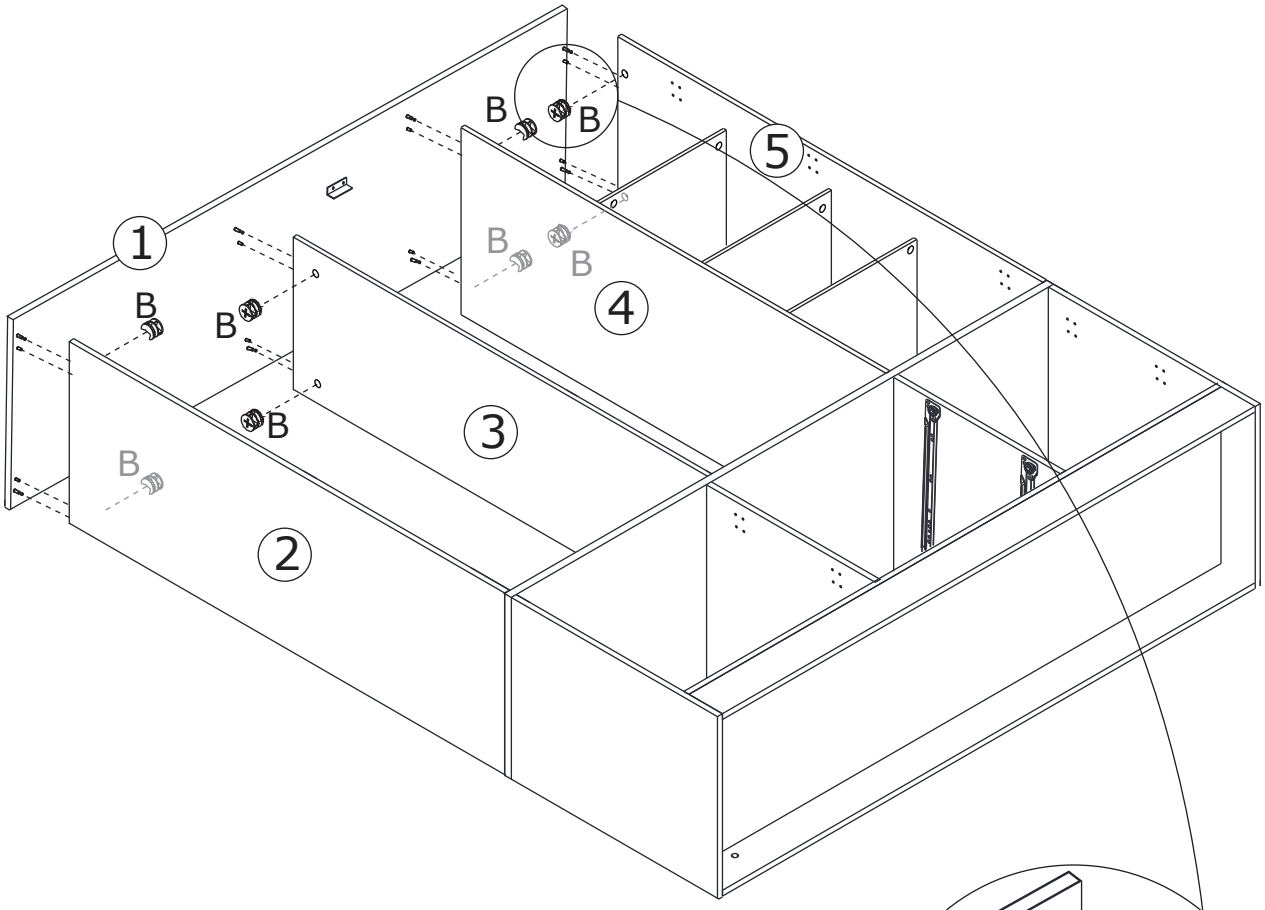

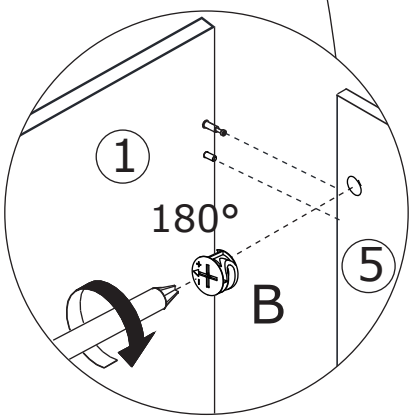

25

P x 38	R x 24	
	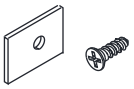	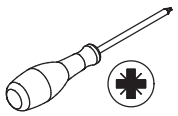
∅3 x 12 mm	∅3 x 12 mm	

Fix back board 7, 8, 28 and 29 to the cabinet with screw(P) as shown.
Use iron sheet(R) to fix board 7, 8, 28 and 29 together as shown.

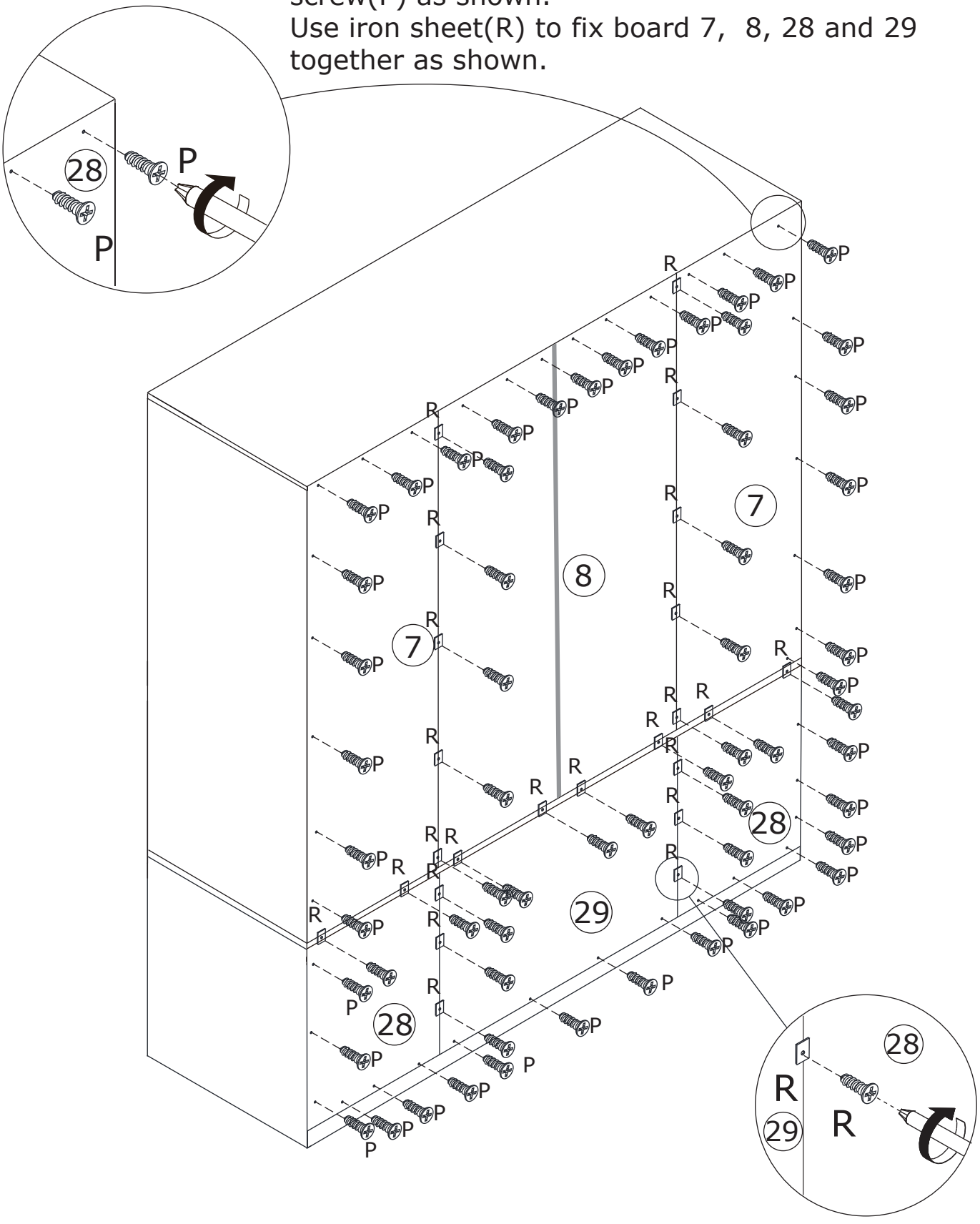

26

N x 2

x4

∅3.5 x 14 mm

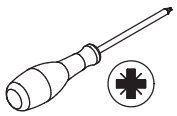

Fix part(N) to board 2, 3 and 4 as shown.
Place clothing rod 10 and 11 as shown.

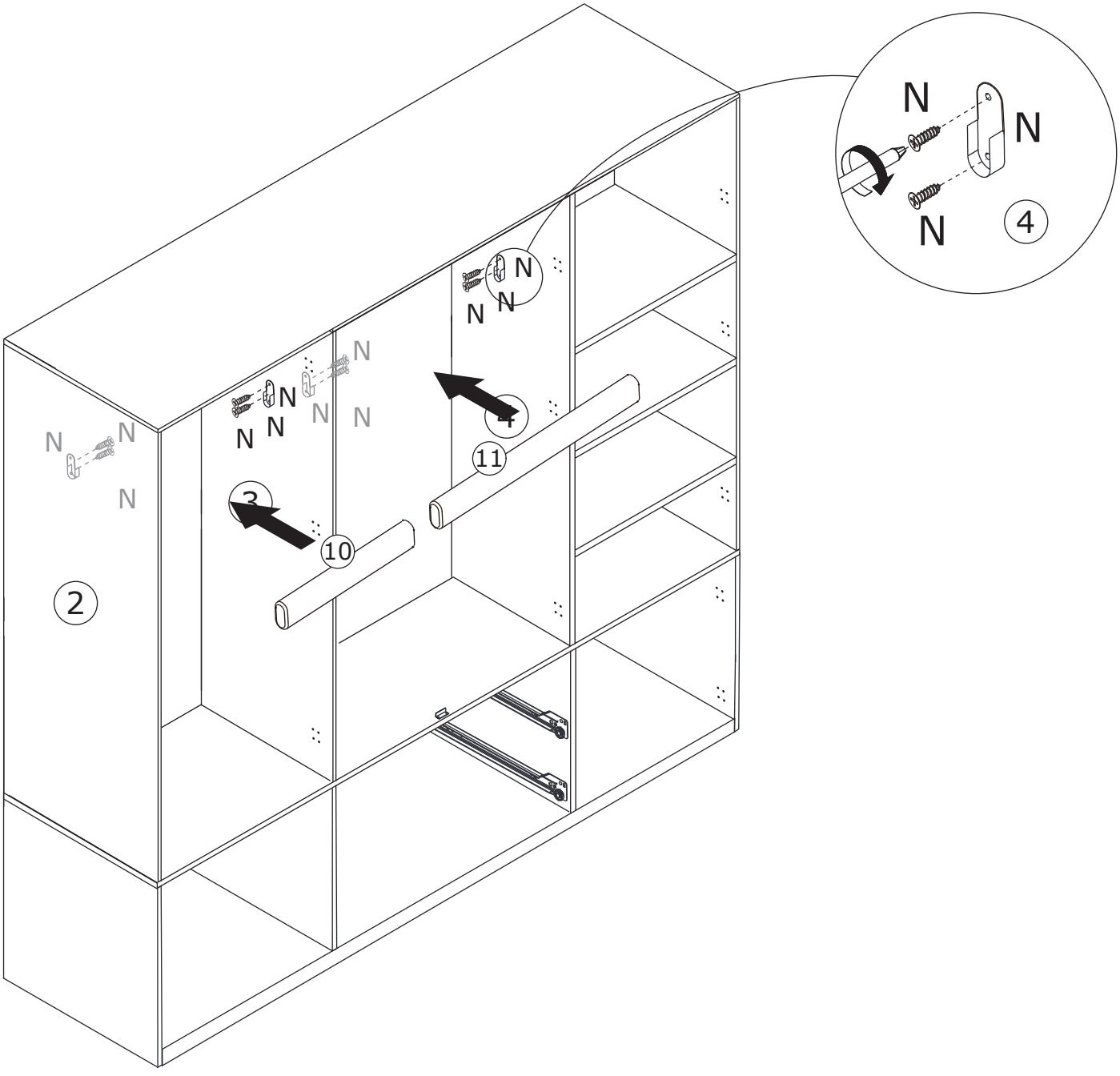

27

Pay attention to the difference between the middle parts of the two types of door hinges.

- The small curved door hinges(H) are used on the outermost door plates.
- And the large curved door hinges(S) are used on the door panel in the middle of the cabinet.

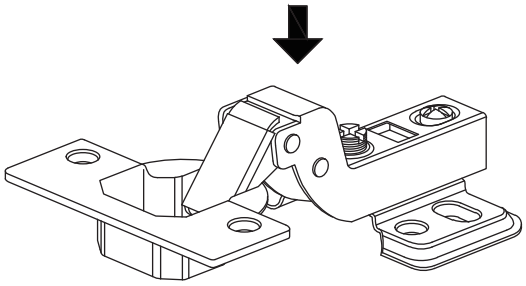

H

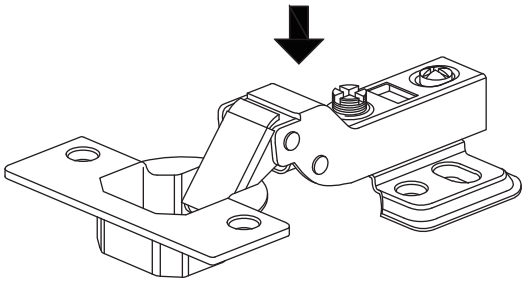

S

28

H x 3

x 2

∅3.5 x 14 mm

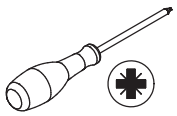

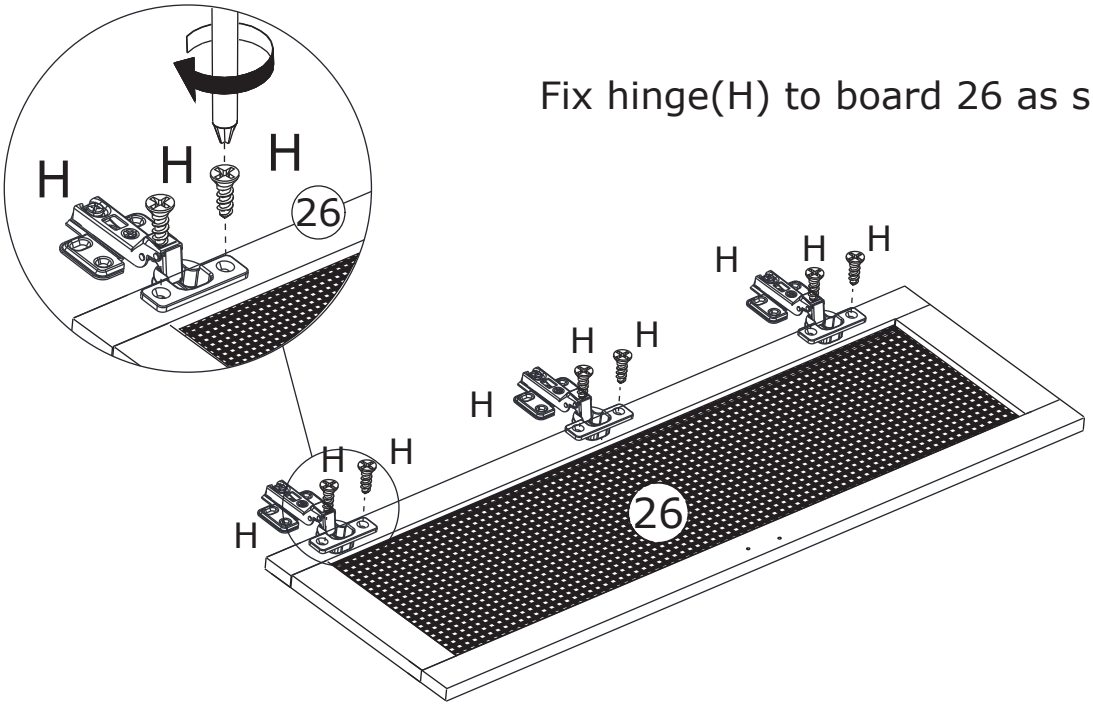

Fix hinge(H) to board 26 as shown.

29

H x 3

x 2

∅3.5 x 14 mm

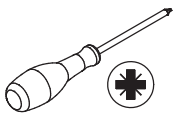

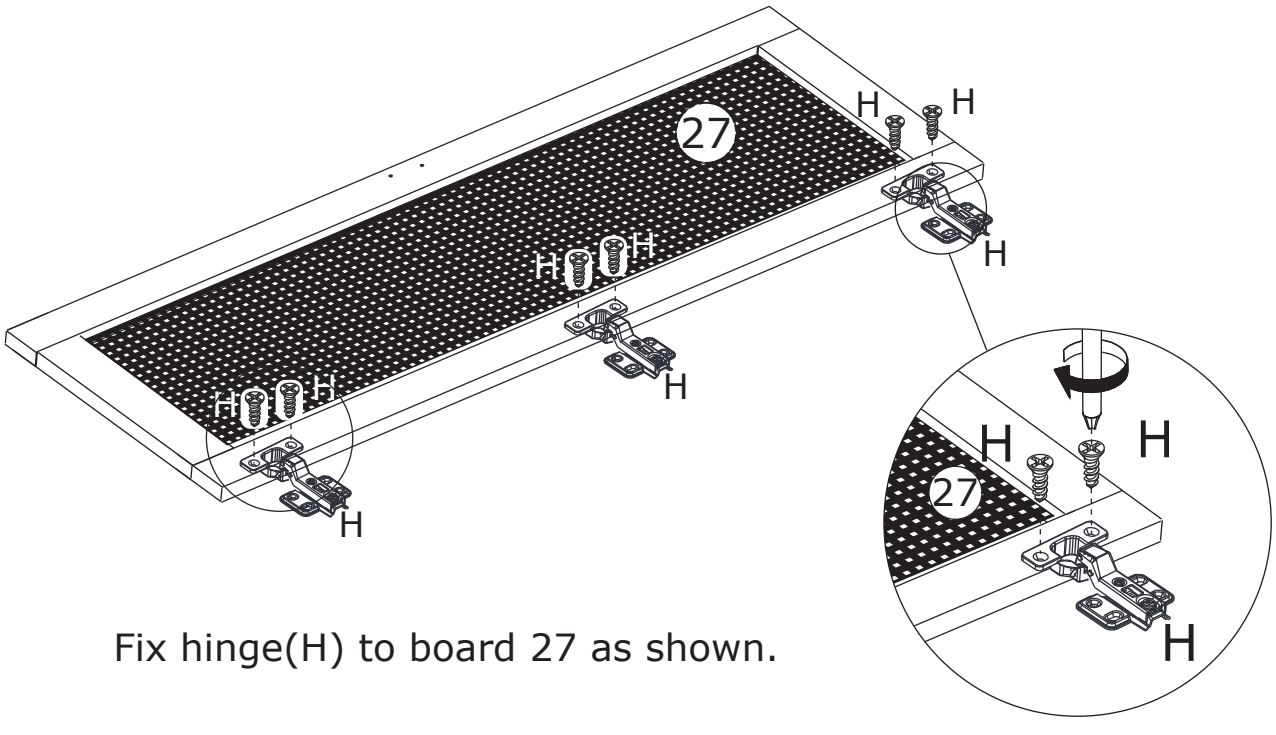

Fix hinge(H) to board 27 as shown.

30

H x 24	Q x 2	
	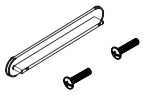	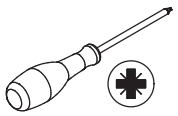
∅3.5 x 14 mm	∅4 x 18 mm	

Assemble door 26 and 27 to outmost side boards by fixing hinge(H) as shown.
Fix handle(Q) to board 26 and 27 as shown.

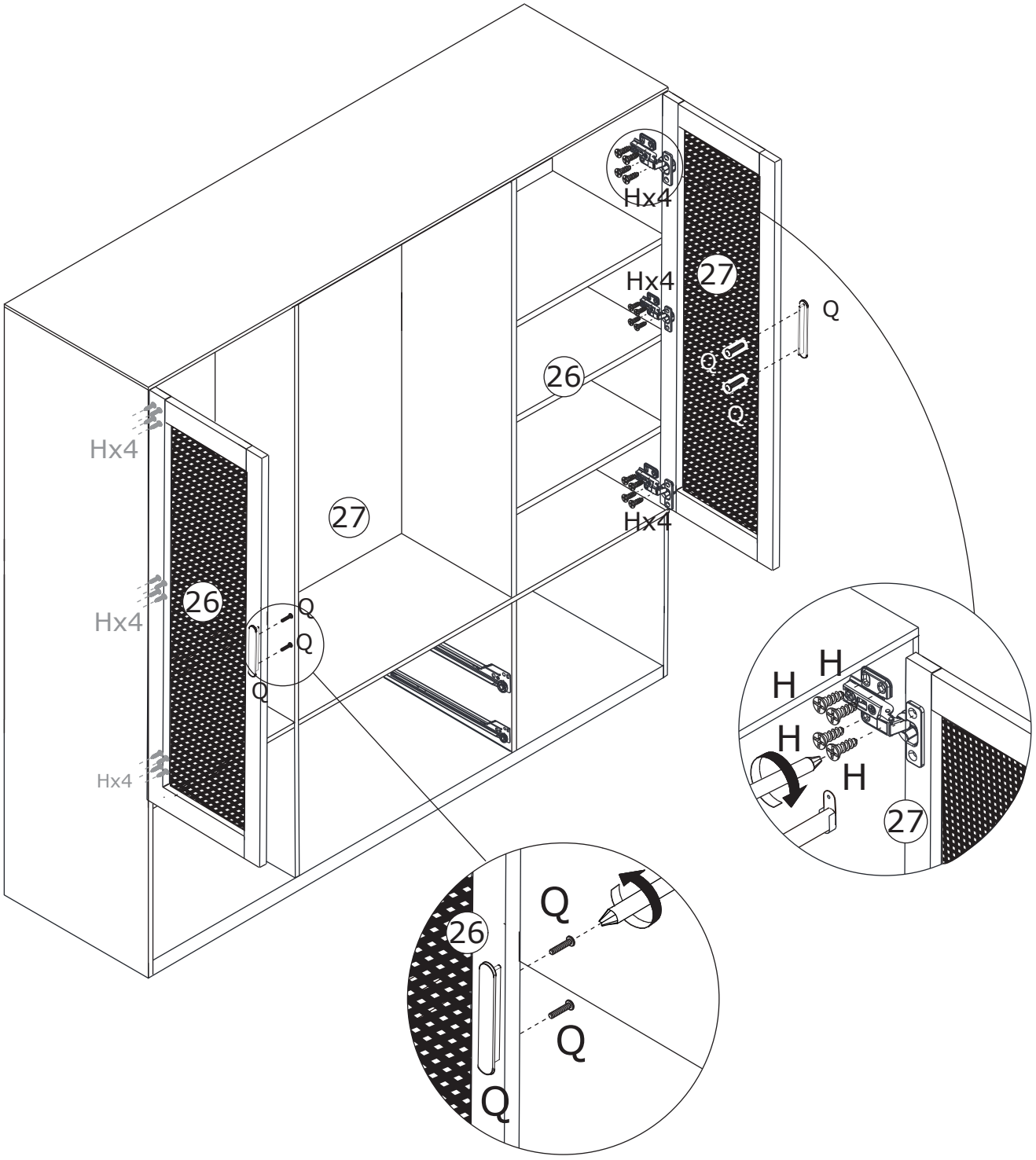

31

S x 3

x 2

∅3.5 x 14 mm

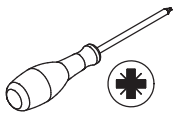

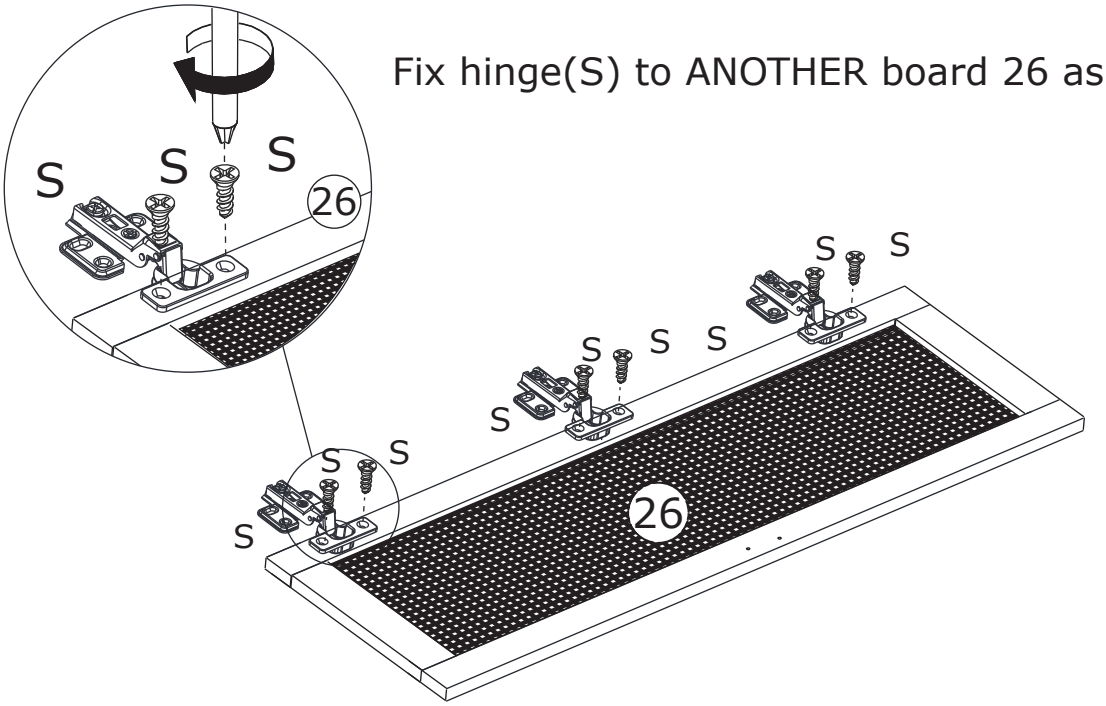

Fix hinge(S) to ANOTHER board 26 as shown.

32

S x 3

x 2

∅3.5 x 14 mm

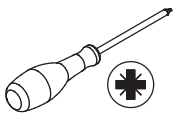

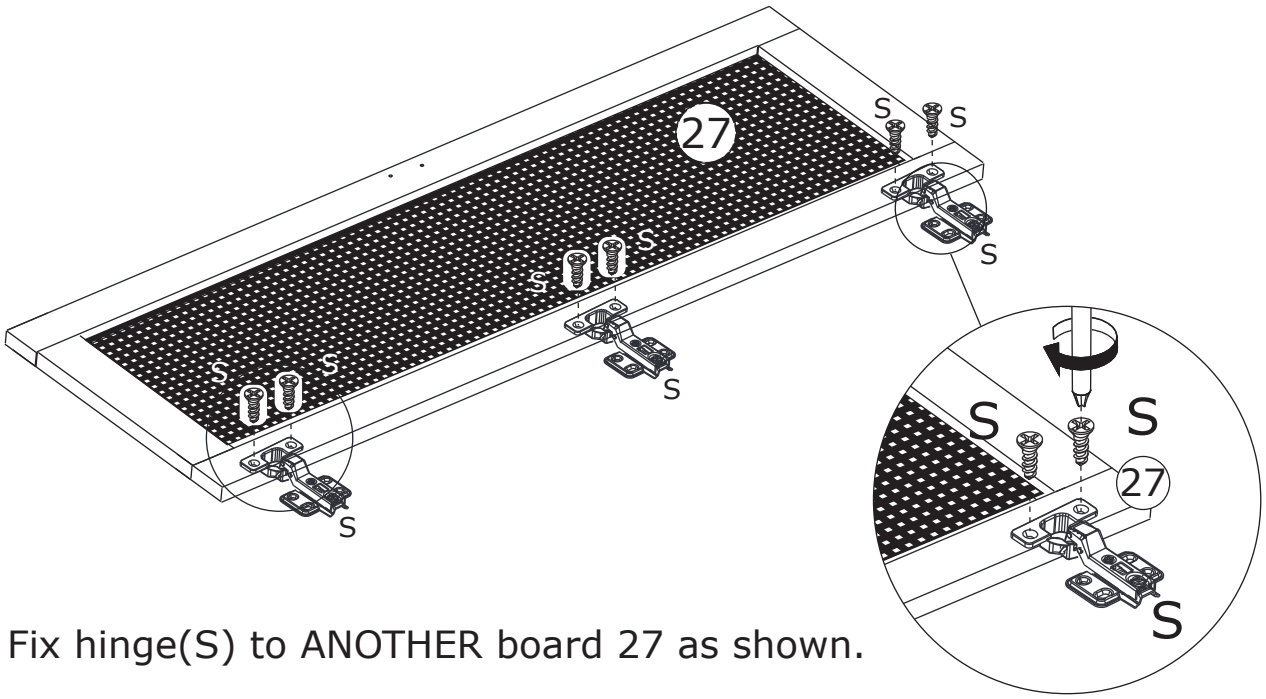

Fix hinge(S) to ANOTHER board 27 as shown.

33

Q x 2	S x 24	
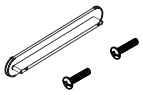		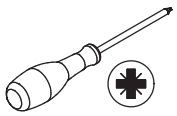
∅4 x 18 mm	∅3.5 x 14 mm	

Assemble door 26 and 27 to the middle side boards by fixing hinge(S) as shown.
Fix handle(Q) to board 26 and 27 as shown.

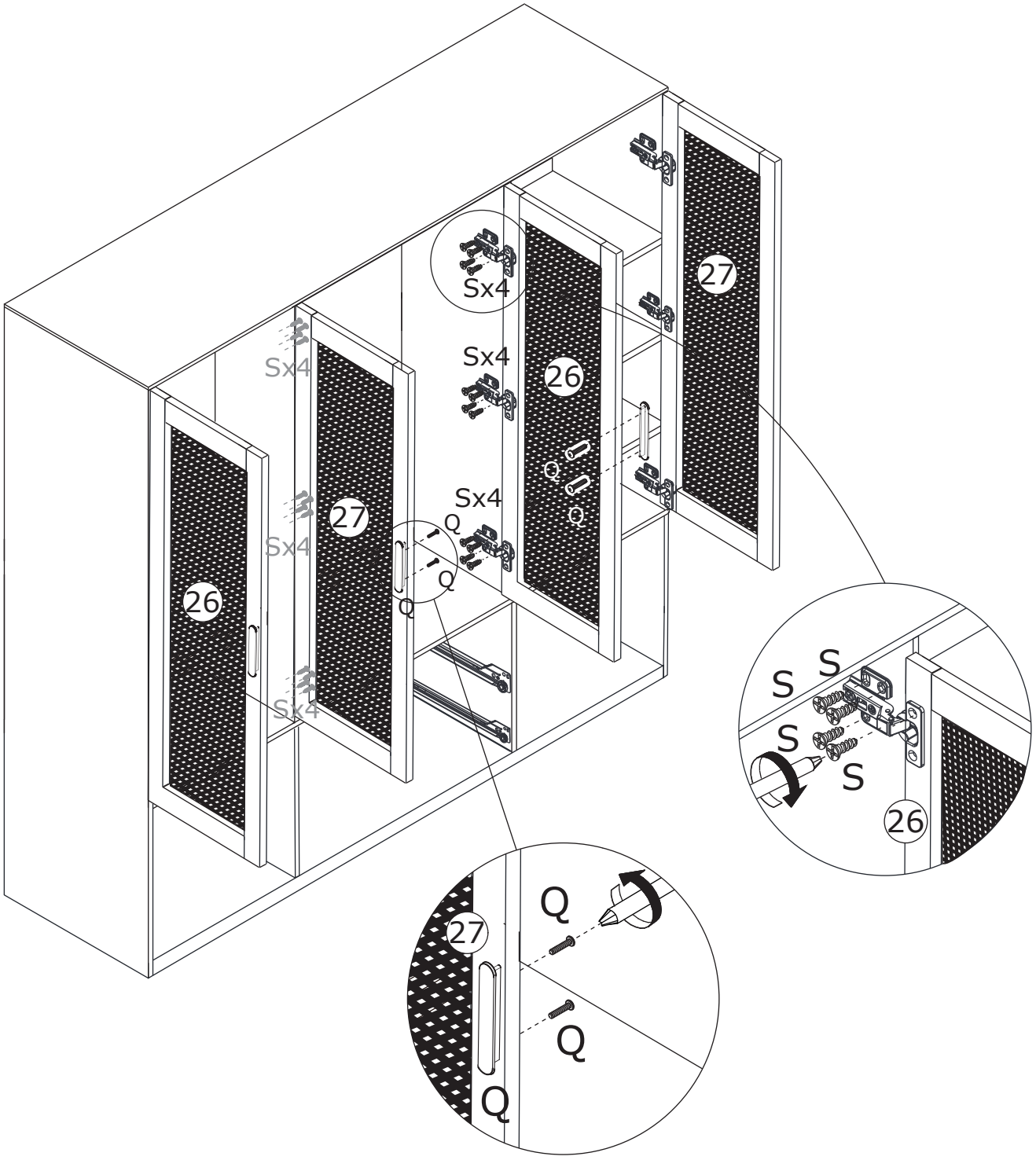

34

H x 2

x 2

∅3.5 x 14 mm

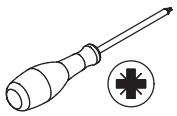

Fix hinge(H) to board 19 as shown.

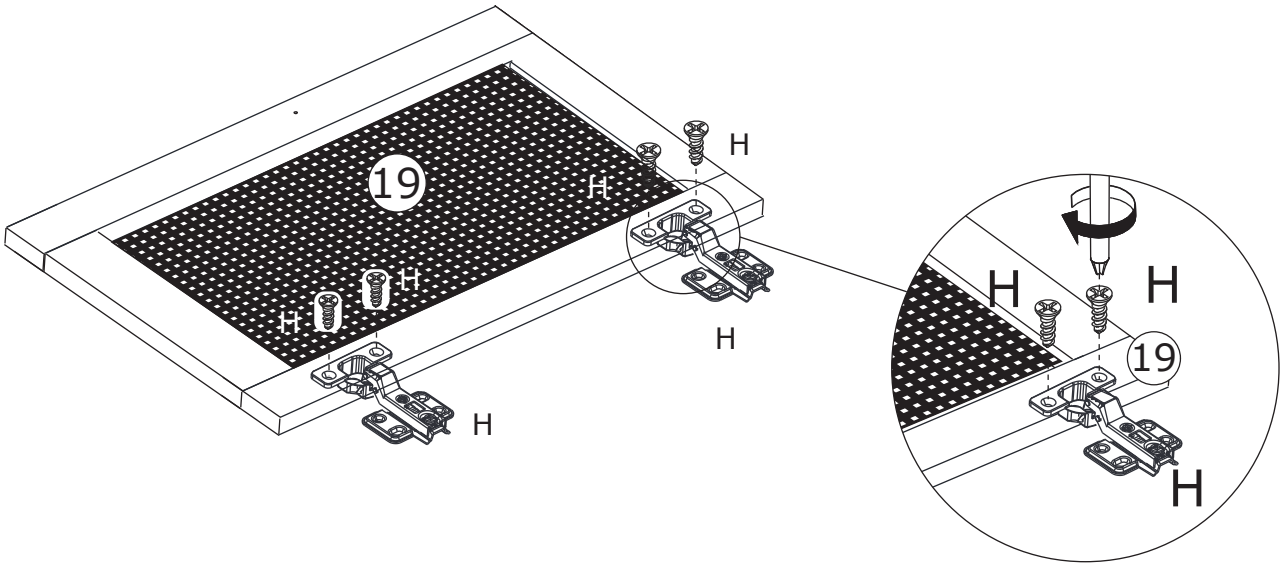

35

H x 2

x 2

∅3.5 x 14 mm

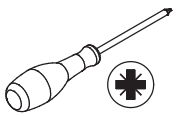

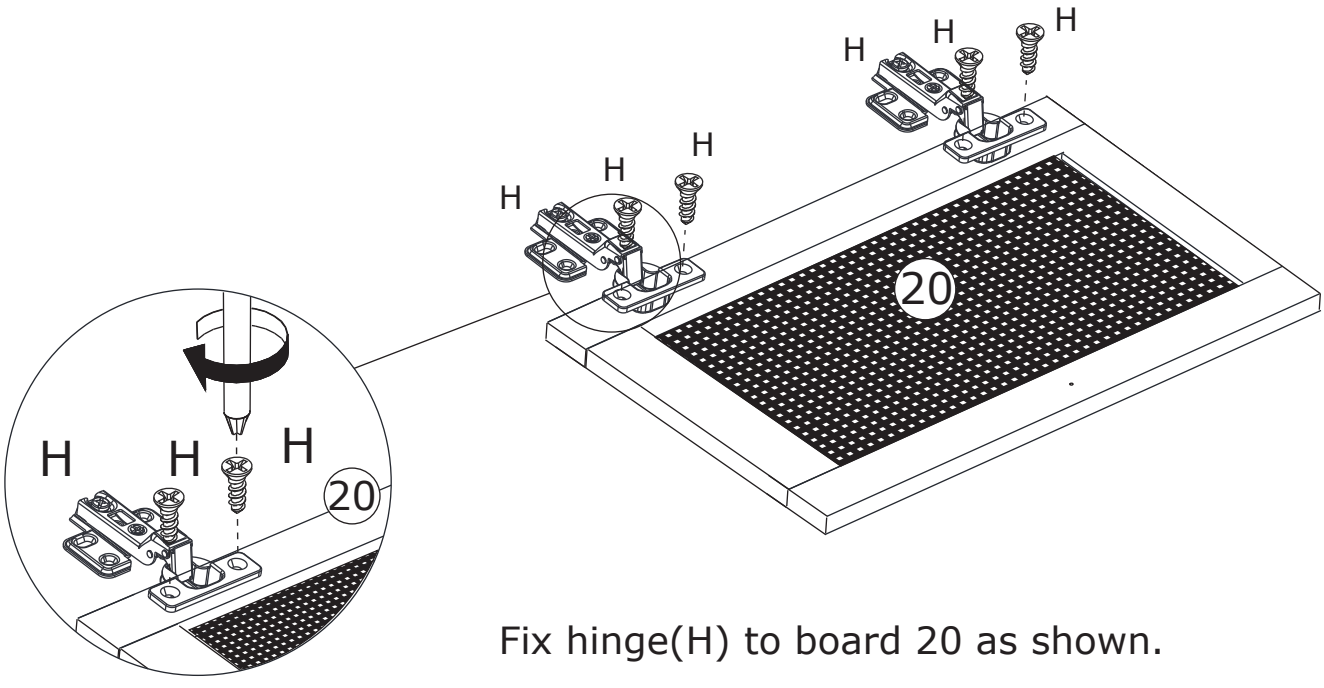

Fix hinge(H) to board 20 as shown.

36

H x 16	J x 2	
		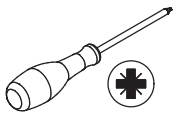
∅3.5 x 14 mm	∅4 x 22 mm	

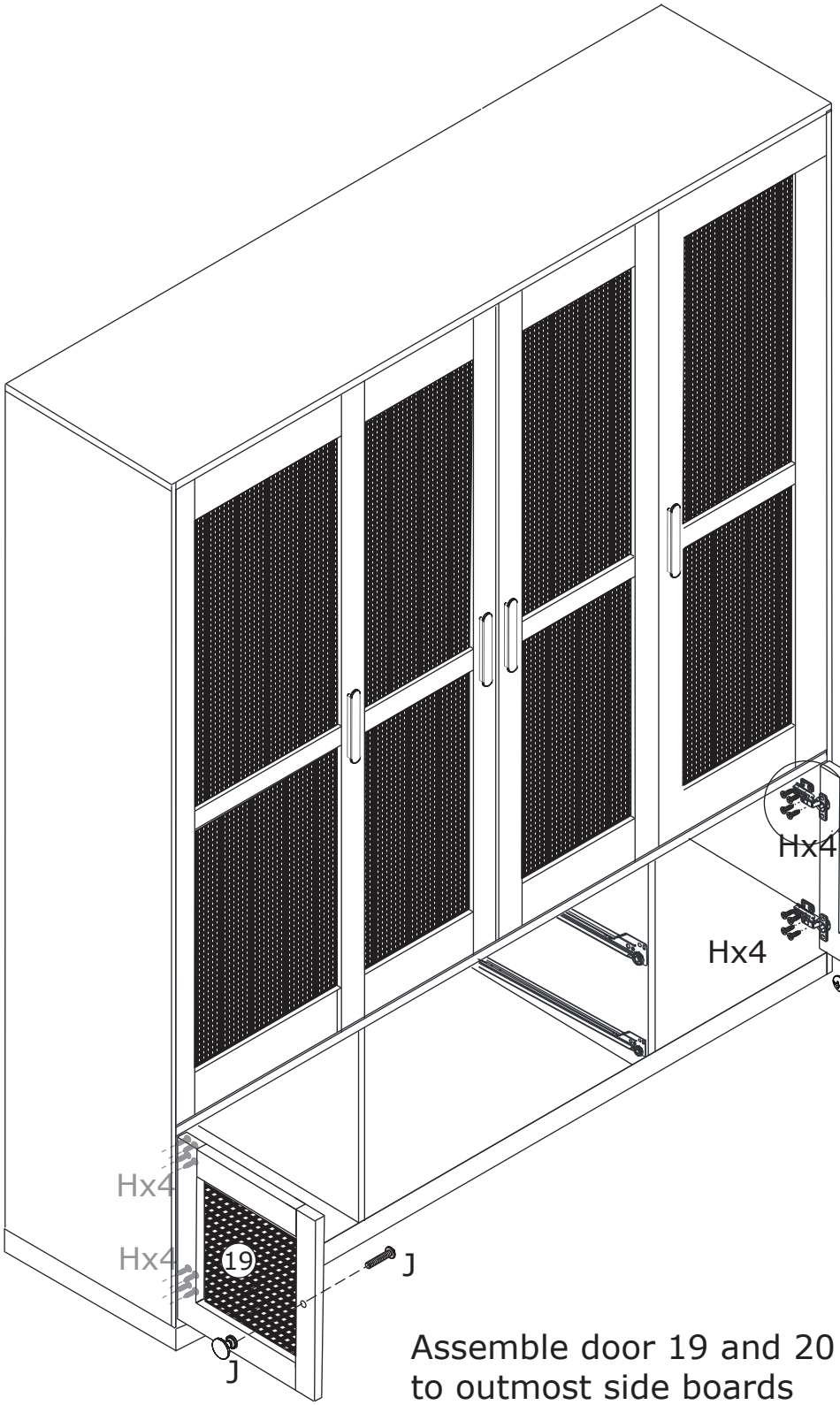

Fix knob(J) to board 19 and 20 as shown.

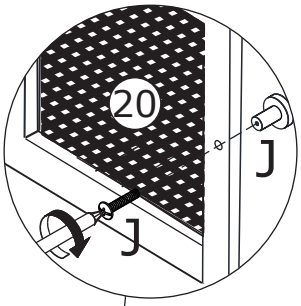

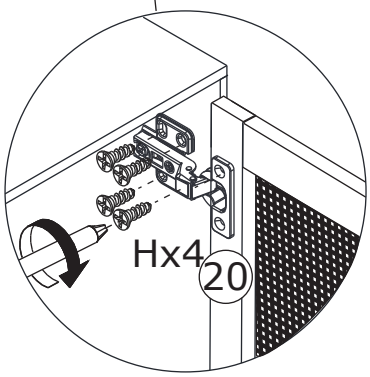

Assemble door 19 and 20 to outmost side boards by fixing hinge(H) as shown.

37

A x 4	G x 8	
	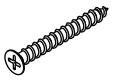	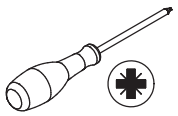
∅6 x 35 mm	∅4 x 30 mm	

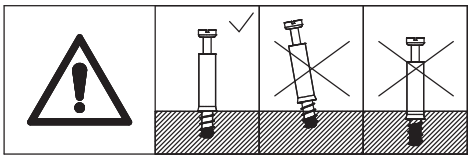

Fix board 21 and 22 to board 23 with screw(G) as shown.
Screw eccentric rod(A) into board 23 at first.

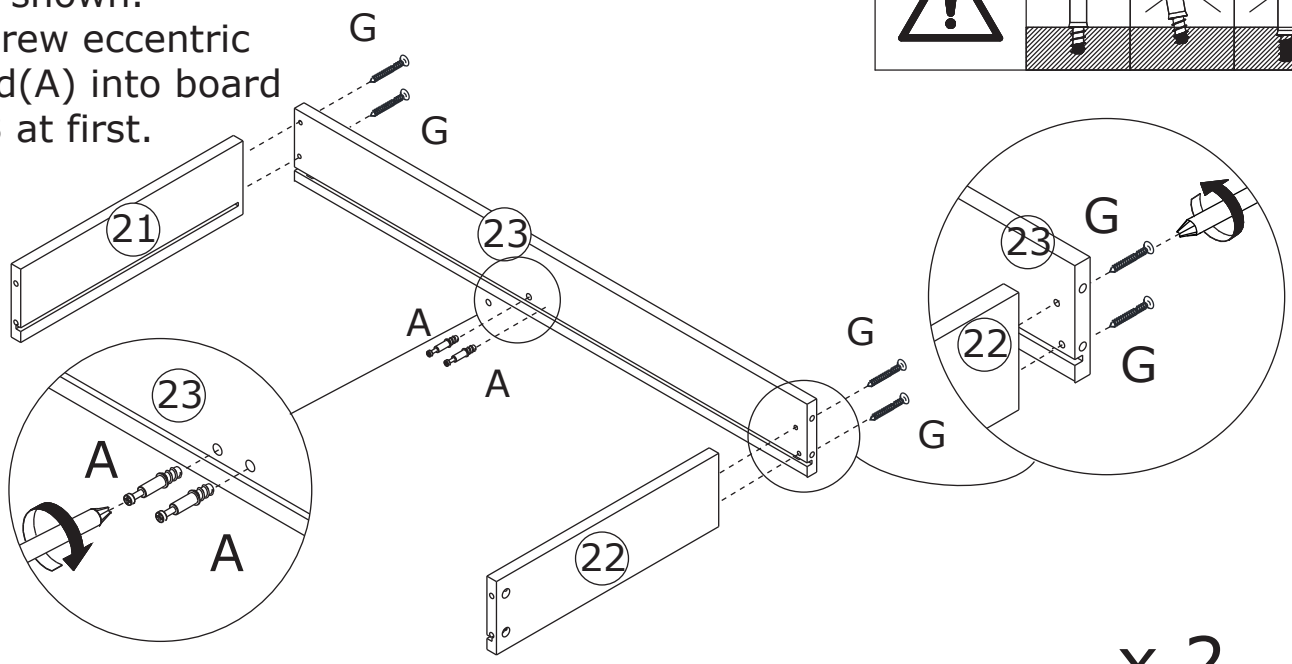

x 2

38

T x 4	
	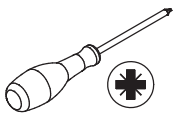
∅15 x 9.5 mm	

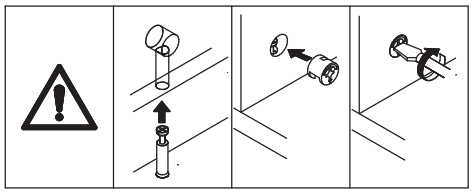

Connect board 31 to board 23, add cam lock(T) into and turn clockwise to tighten as shown.

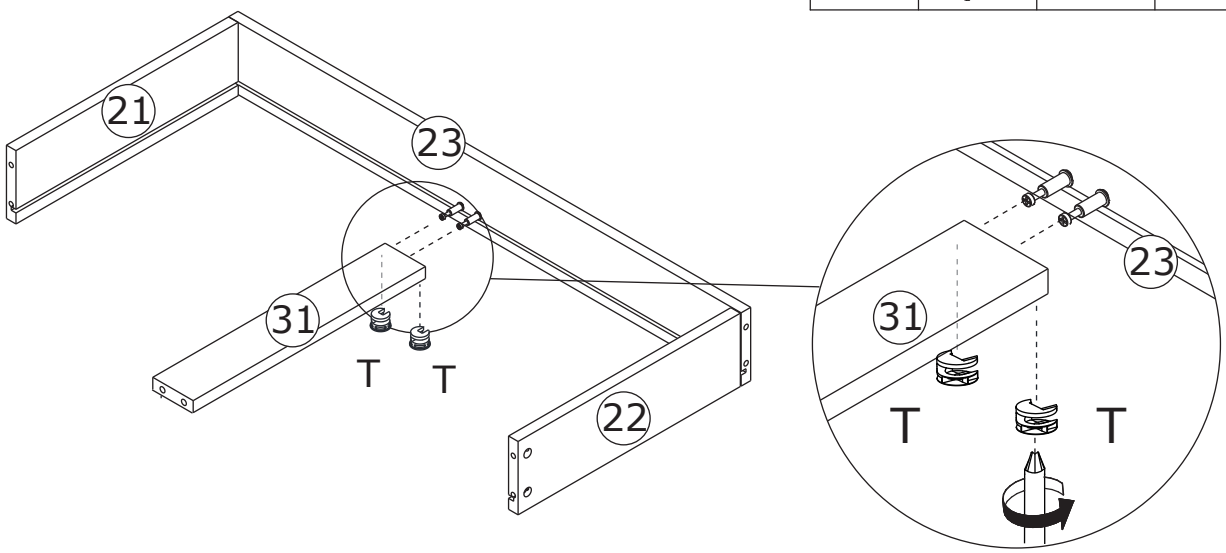

x 2

39

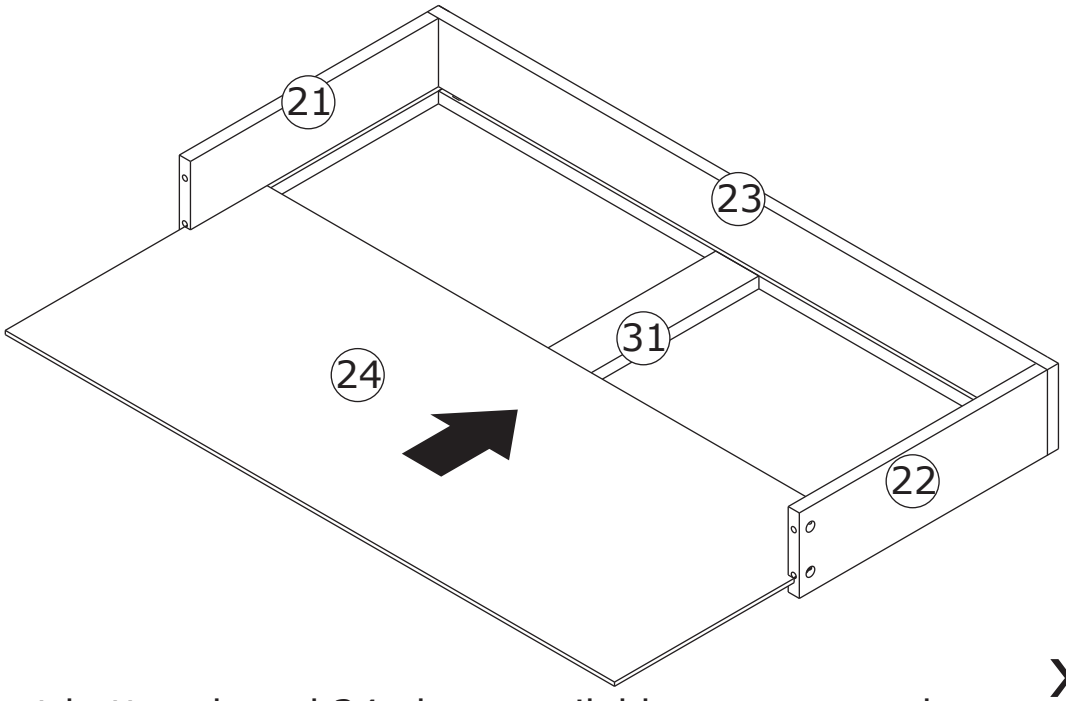

Insert bottom board 24 along available grooves as shown.

x 2

40

A x 12



∅6 x 35 mm

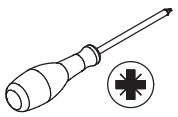

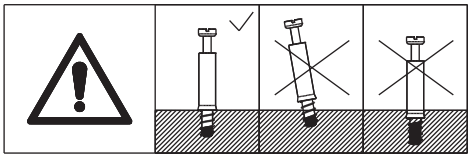

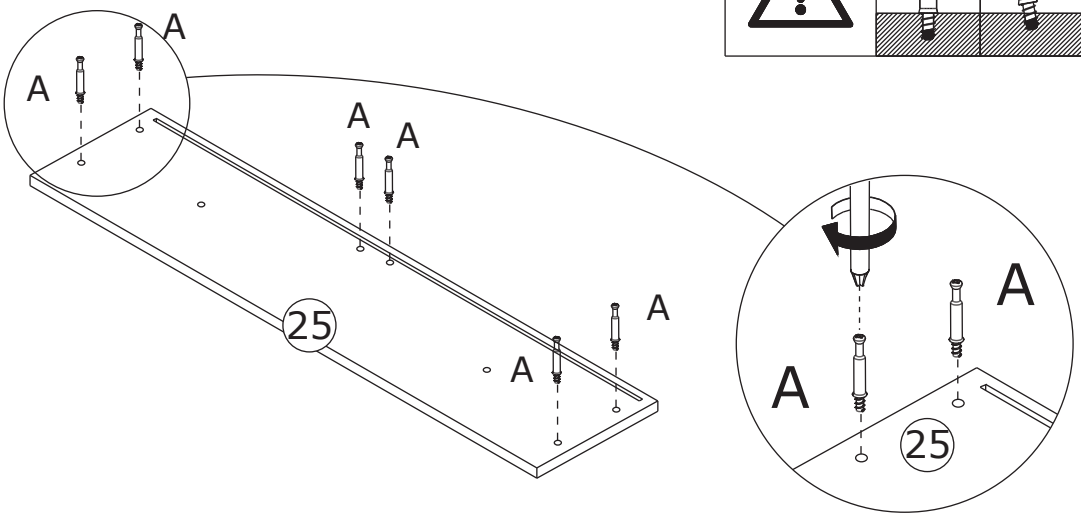

Screw eccentric rod(A) into board 25 at first.

x 2

41

B x 8	J x 4	T x 4	
∅15 x 11 mm	∅4 x 22 mm	∅15 x 9.5 mm	

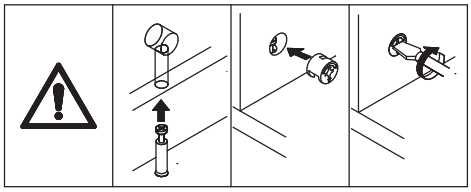

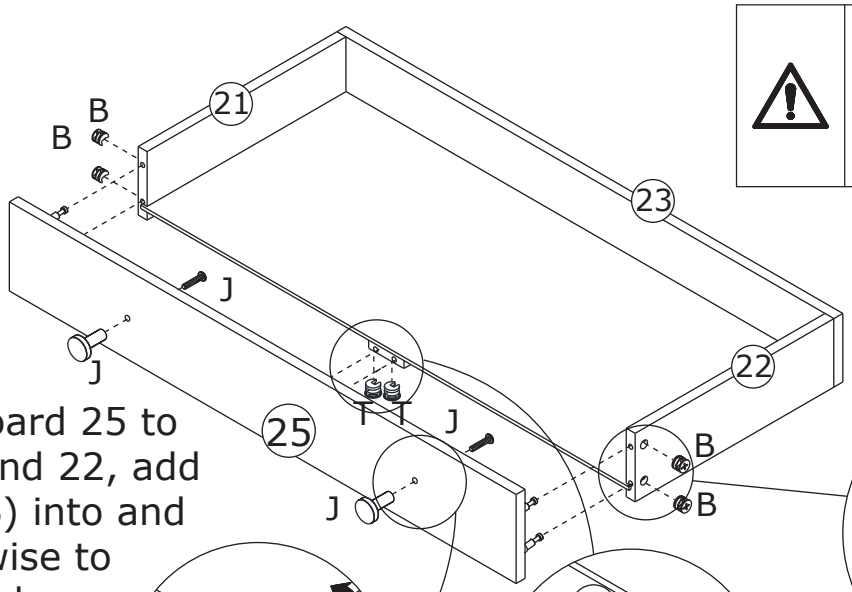

Connect board 25 to board 21 and 22, add cam lock(B) into and turn clockwise to tighten as shown.

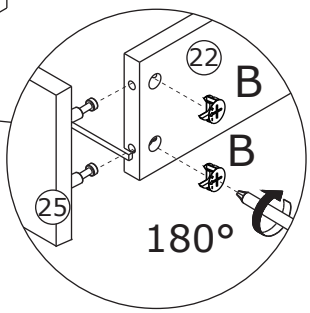

x 2

Fix knob(J) to board 25 as shown.

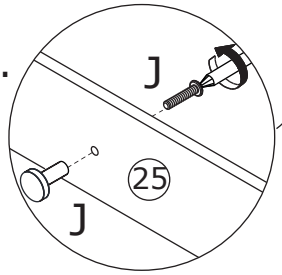

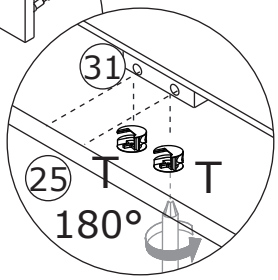

42

D x 2	E x 8	
DL, DR L = 350 mm	∅3 x 12 mm	

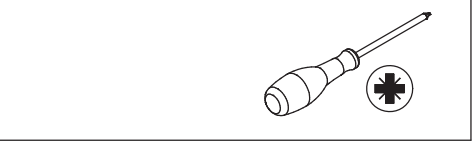

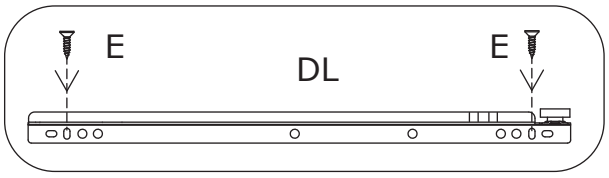

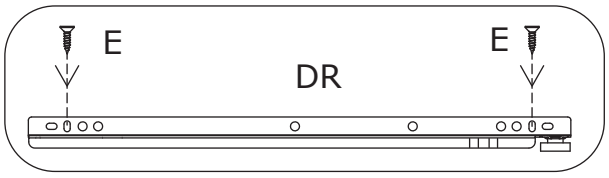

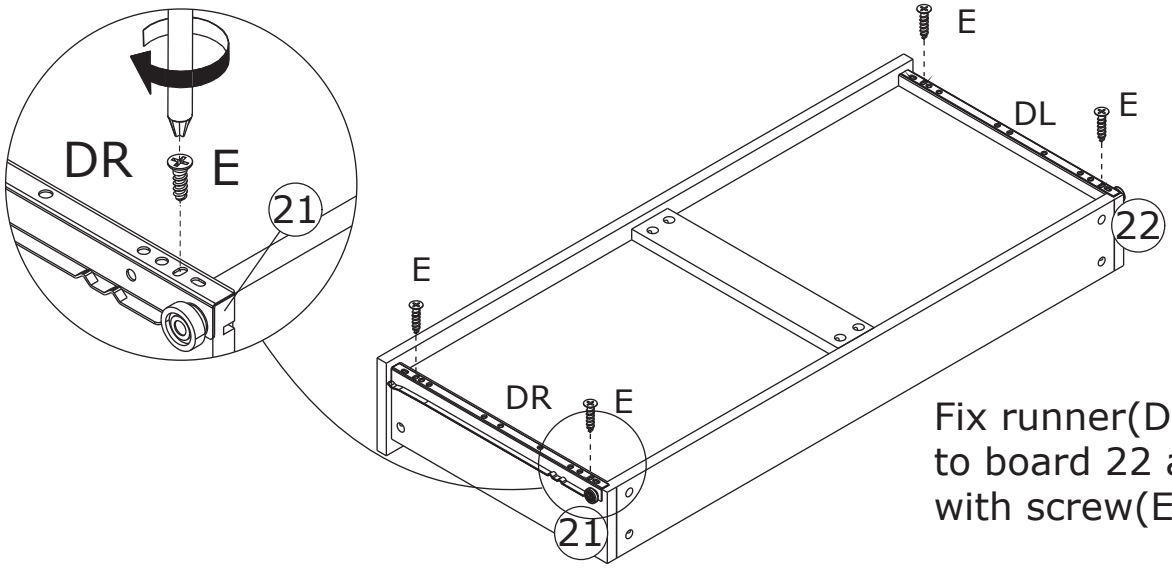

Fix runner(DL) and (DR) to board 22 and 21 with screw(E) as shown.

x 2

43

L x 78

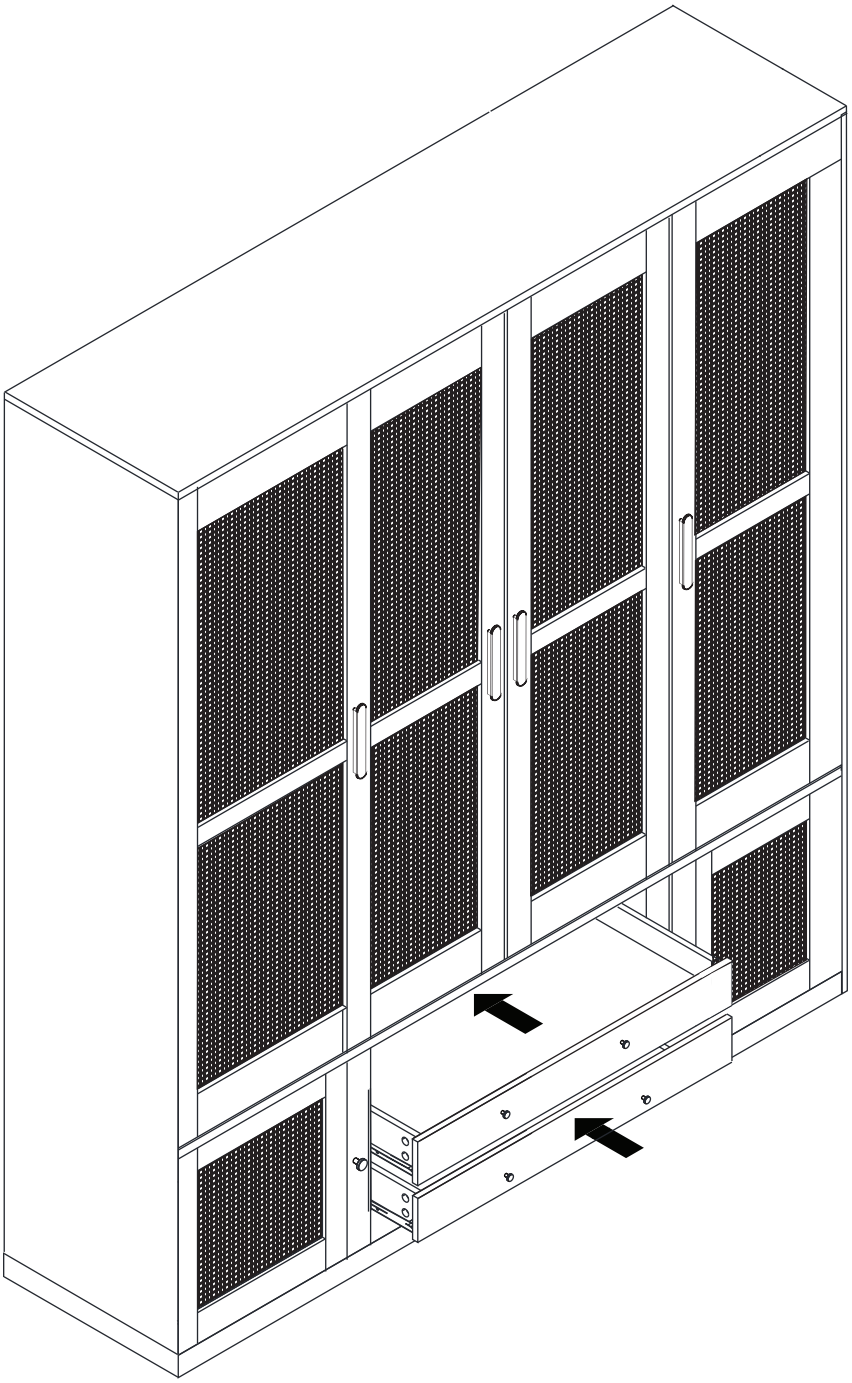

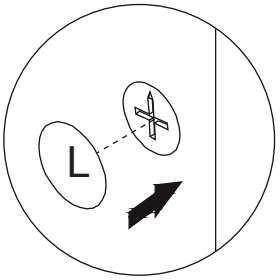

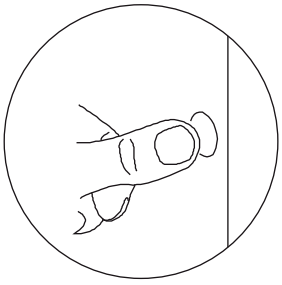

Insert drawers in as shown.

44

M x 1

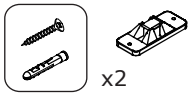

x2

∅4 x 40 mm

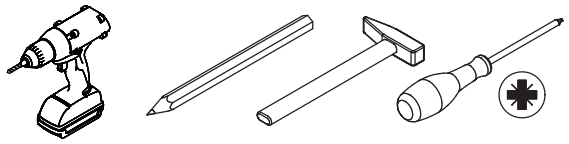

Drill holes on your wall, knock part(M) into.

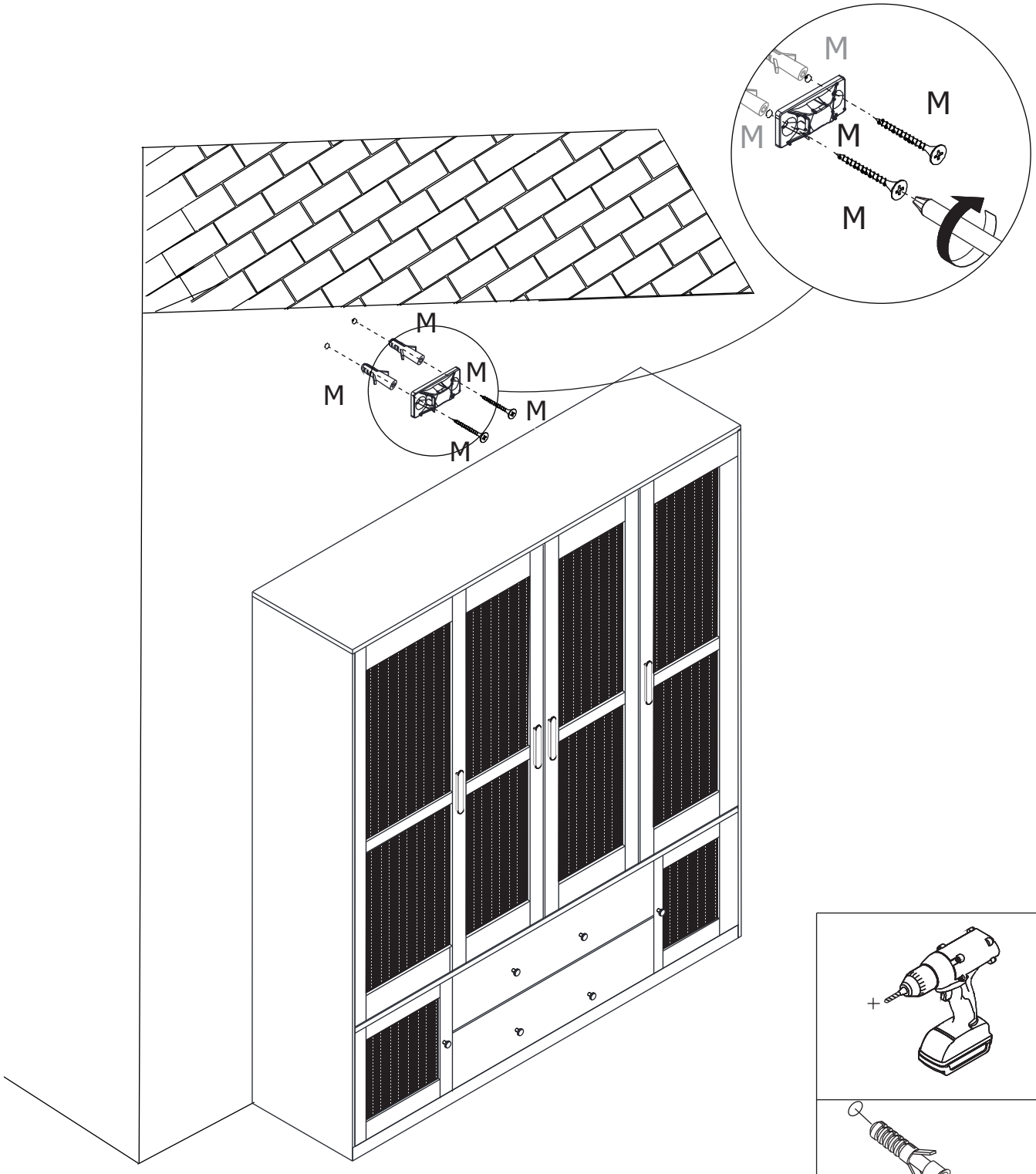

45

M x 1



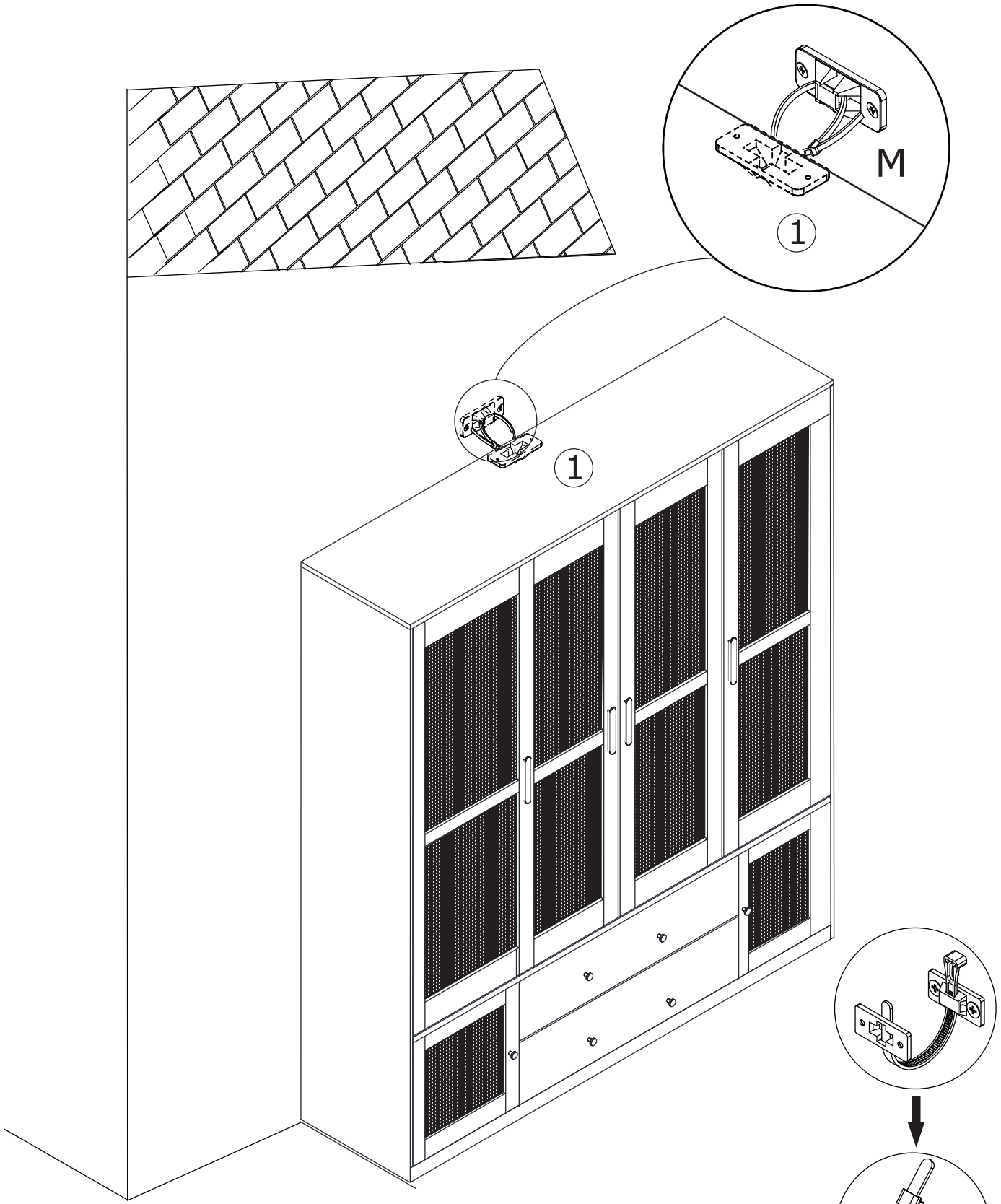

Install anti-tipping device as shown.

46

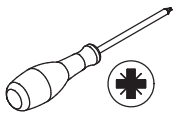

If doors are still not aligned if the hinges are properly correctly, please watch the video.

https://youtu.be/n0Lb36SoODM

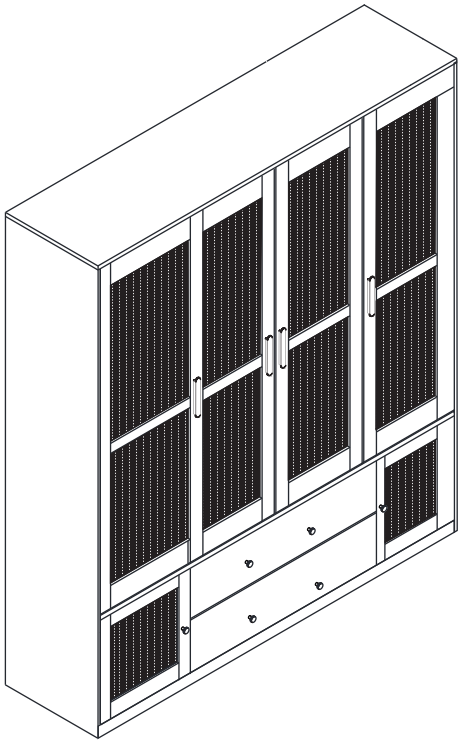

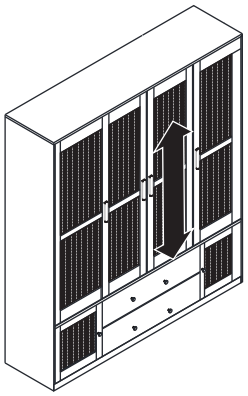

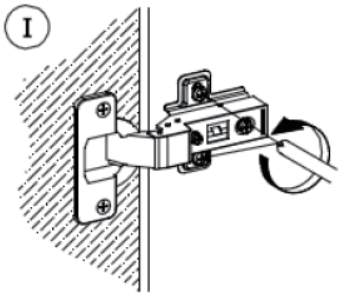

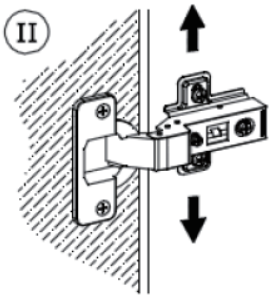

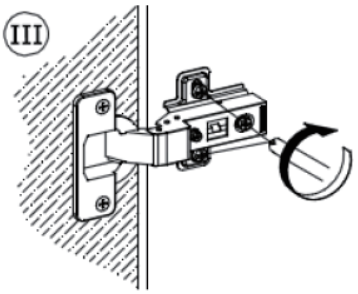

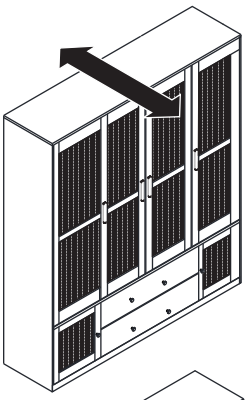

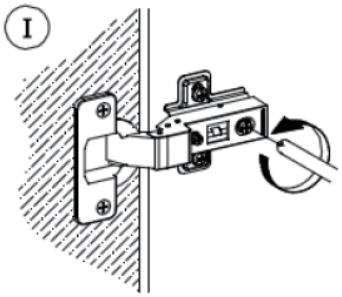

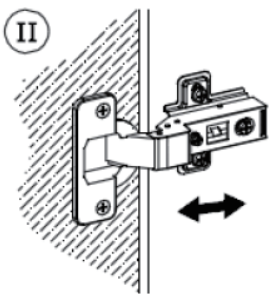

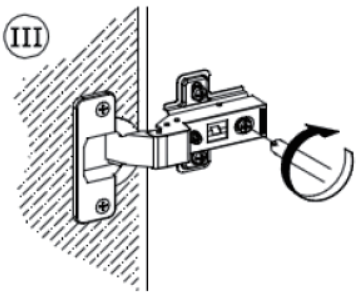

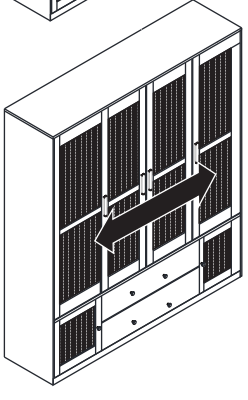

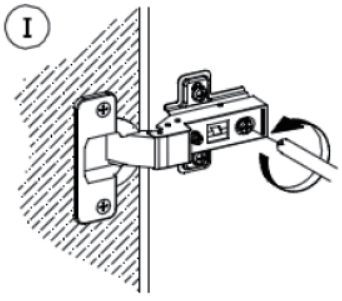

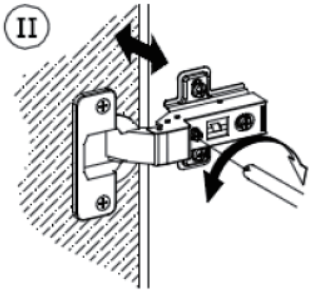

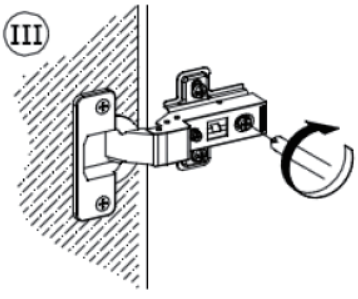

WARRANTY

WARRANTY CLAIMS

- There is a 30-day warranty for broken furniture or any other problems that do not work properly. The warranty will start from the date of purchase which must be verified by proof of purchase.

- Before making a claim, we may be able to answer your query, simply call us. Please leave your purchase order number, along with some details of the problem, if you want a replacement part. We will arrange within 48 hours. If there is out of stock, we will reply with a shipping date.

- The product must be used in accordance with the instructions provided. For health reasons.

- For other reasons, if the furniture needs to be returned, it must be cleaned and dried and operated within 30 days of receipt.

Type of Warranty Claim

- Failure to follow the furniture instructions will invalidate the warranty. Attention please.

- Does not include damage during installation, but includes damage during transportation.

Scope of responsibility

- Shall not bear any responsibility for misuse or user damage and / or loss of parts during the installation of furniture.

- After using, the damage and scratches of the furniture are not covered by the warranty.

The Warranty Relates to All Bought in The Us and Covers The Following Areas

- Sheet parts: 1 month from the date of purchase.

- Electrical parts: 1 month from the date of purchase.

RETURNS

CHANGED YOUR MIND AND NEED TO RETURN YOU ITEM?

PLEASE FOLLOW THE BELOW INSTRUCTIONS:

- If you have purchased and have simply changed your mind, follow the retailer's instructions for returns.

DEFECTIVE ITEMS

- If your item is defective in any way, i.e. it doesn't work but you can't identify why, in the first instance, please call us.

DAMAGED ITEMS

- If you receive an order with obvious shipping damage from the retailer, then we suggest the delivery is refused. If the delivery has been accepted and then shipping damage is found, please follow the specific instructions advised by the retailer.
  In all circumstances please save all packaging material and paperwork for the order. Please be aware that if you dispose of packaging material or attempt to return the merchandise without contacting the fulfiller, you jeopardise your chances of making a claim, and you may not receive a credit for the return.

AFTER-SALES CONTACT

 feedbackstation@163.com

 (303)800-6387