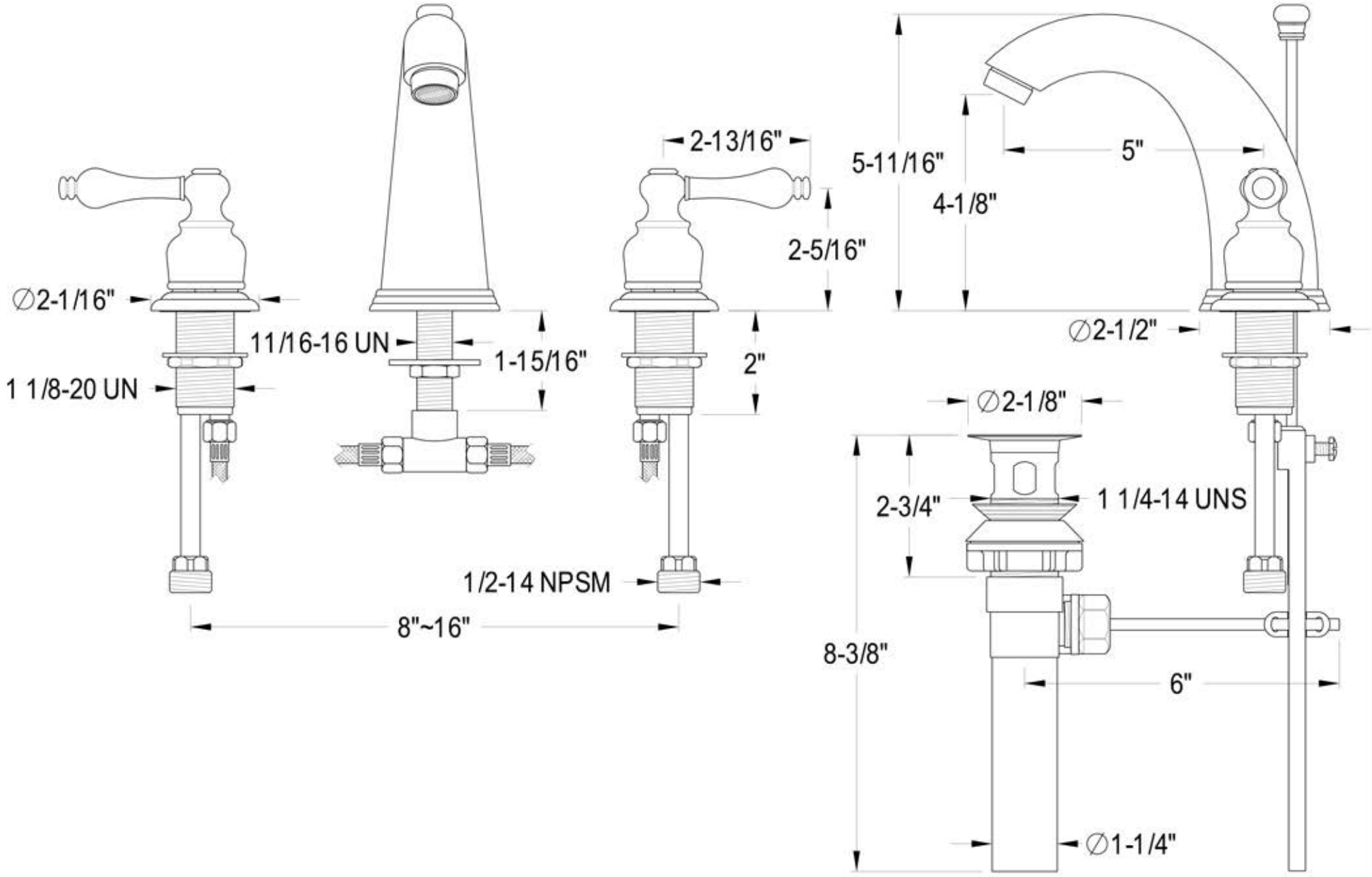Widespread Lavatory Faucet With Retail Pop-Up