BROAN® Elite

Under-Cabinet

SPIRE

Broan Elite brings you Spire, an exciting new shape in a pro-style hood. It's high efficiency ensures energy savings while you enjoy pro-style performance.

SIZE	STAINLESS	GREASE FILTER(S) (replacement)	NON-DUCTED FILTER(S)
30-in.	EPLEC130SS	HPFA424 (Type "B5")	HPF24 (Type "Xb")
36-in.	EPLEC136SS	HPFA430 (Type "C5")	HPF30 (Type "Xc")
42-in.	EPLEC142SS	HPFA436 (Type "D5")	HPF36 (Type "Xd")
48-in.	EPLEC148SS *	HPFA442 (Type "E5")	HPF42 (Type "Xe")

* Not available in Canada.

PERFORMANCE

Duct Orientation	Size	Damper	Sones			CFM @ 0.1 Ps		
			Normal	Medium	High	Normal	Medium	High
Vertical - Rectangular	3¼-in. x 14-in.	Included	0.8	2.5	9.0	180	265	540
Horizontal - Rectangular	3¼-in. x 14-in.	Included	0.8	2.5	10.0	180	275	600
Round - Vertical	7-in.	Sold Separately	0.8	2.5	10.0	175	245	500

FEATURES

Control type	3-speed Capacitive Touch
Delay off	no
Filter Clean Reminder	yes
Heat Sentry™	no
ADA Capable	yes
Lighting	2-level ENERGY STAR® LED (included)
Grease Filter(s)	Hybrid Baffle (Qty. 2)
Installation Hardware	EZ1 Brackets
ENERGY STAR®	yes
Recirculation	Non-ducted filter(s) sold separately
3¼-in x 10-in Damper/Duct Connector	included

AC INPUT

120V, 60 Hz - 1.9 AMPS

OPTIONAL ACCESSORIES

7-in. Round Damper	BP87
ADA Wiring Kit	HAWRK3
Make-up Air Damper	MD6TU, MD8TU or MD10TU

MOUNTING HEIGHT

24-in. to 30-in. from cooktop to bottom of hood

LIMITED WARRANTY

1-year
3-year (LED modules only)
(See installation manual for full warranty text.)

FOR INDOOR USE ONLY

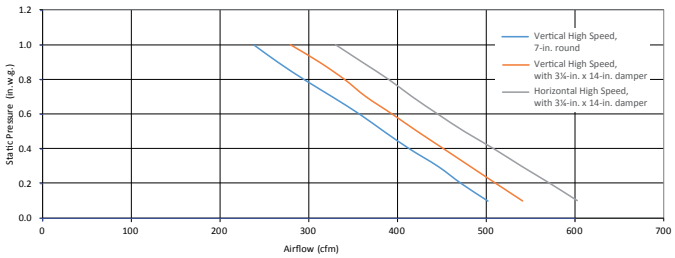

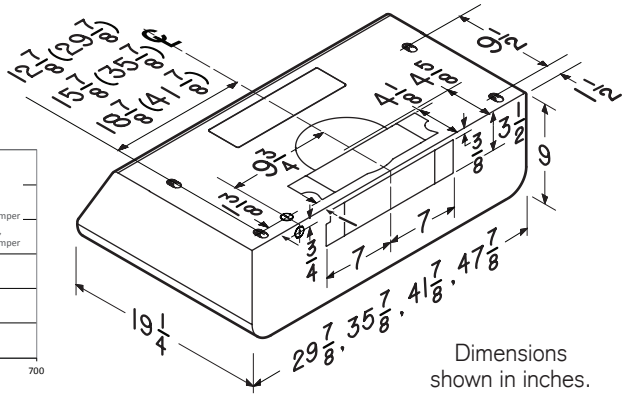

Dimensions shown in inches.

This product was tested by Broan-NuTone for airflow performance using the ANSI/AMCA 210 Standard, which is equivalent to the Home Ventilating Institute HVI 916 - Procedure for Air Flow Testing, and tested for sound performance using the ANSI S12.51 Standard, which is equivalent to the Home Ventilating Institute HVI 915 - Procedure for Loudness Rating of Residential Fan Products.

99045777A

Broan-NuTone LLC | 926 West State Street, Hartford, WI 53027 | 1 800-558-1711 | www.broan.com
Broan-NuTone Canada ULC | 1140 Tristar Drive Mississauga, Ontario Canada L5T 1H9 | 1 888-882-7626 | www.broan.ca

SPECIFICATION SHEET
SPIRE - EPLEC1 SERIES