CAUTION:

To prevent electrical shock, ensure electricity has been turned off at the circuit breaker before beginning.
Read all instructions before installing.
System is intended for installation by a licensed electrician in accordance with the National Electrical Code (NEC) and local regulations.
When handling the fixture, do not apply pressure to the LEDs. Hold the fixture by the base only.
Retain installation instructions for future maintenance reference.

MAINTENANCE NOTE:

Coastal conditions may cause mineral and residue build-up on the fixture. We recommend that customers in coastal areas clean all external surfaces of the fixture once every two weeks with a wet cloth.

MISE EN GARDE:

Pour éviter tout choc électrique, assurez-vous que le disjoncteur soit mis hors tension avant de commencer.
Lisez toutes les instructions avant l'installation.
Le système doit être installé par un électricien licensié conformément au code national de l'électricité (NEC), et également aux règlements locaux.
Lors de la manipulation du luminaire, n'appuyez pas sur les LED.
Tenez-le uniquement par la base.

NOTE D'ENTRETIEN:

Les conditions côtières peut causer une accumulation de minéraux et de résidue sur le luminaire. Nous recommendons aux clients qui resident dans les zones côtières de nettoyer toutes les surfaces externes du luminaire une fois toutes les deux semaines avec un chiffon humide.

PRECAUCIÓN:

Para evitar descargas eléctricas, asegúrese de que la electricidad se haya cortado en el disyuntor antes de comenzar.
Lea todas las instrucciones antes de instalar.
El sistema está diseñado para ser instalado por un electricista autorizado de acuerdo con el Código Eléctrico Nacional (NEC) y las regulaciones locales.
Al manipular el dispositivo, no ejerza presión sobre los LED. Sujete el dispositivo únicamente por la base.
Conserve las instrucciones de instalación para futuras consultas de mantenimiento.

NOTA DE MANTENIMIENTO:

Las condiciones costeras pueden provocar la acumulación de minerales y residuos en el artefacto. Recomendamos que los clientes en áreas costeras limpien todas las superficies externas del artefacto una vez cada dos semanas con un paño húmedo.

MOUNTING THE FIXTURE (Fig.1)

1. Shut off power at the fuse box or circuit breaker. If necessary, remove the old fixture including the mounting hardware.
2. Carefully remove the fixture from the carton and check that all parts are included as show in Figure 1.
3. Unscrew screws (D) separate mounting plate (A) from fixture (C).
4. Attach mounting plate (A) to the junction box (not included) with mounting screws (B). The side of the mounting plate (A) marked “GND” must be face out.

CONNECTING THE WIRES (Fig. 2&Fig. 3)

5. The fixture can switch between three color temperatures(3000K-4000K-5000K),which can be adjusted to you preference with the switch in the backplate(Fig.2).
6. Connect the electrical wires as shown in Fig. 3, making sure that all wire connectors(E) are secured. If your junction box has a ground wire (green or bare copper), connect the fixture’s ground wire to it. Otherwise, connect the fixture’s ground wire directly to the mounting plate (A) using the green screw provided. After the wires are connected, tuck them carefully inside the junction box.

FINISHING THE INSTALLATION (Fig.1)

7. Align fixture (C) onto mounting plate (A) and secure with screws (D) provided.

Your installation is now complete. Return power to the junction box and test the fixture.

Fig. 1

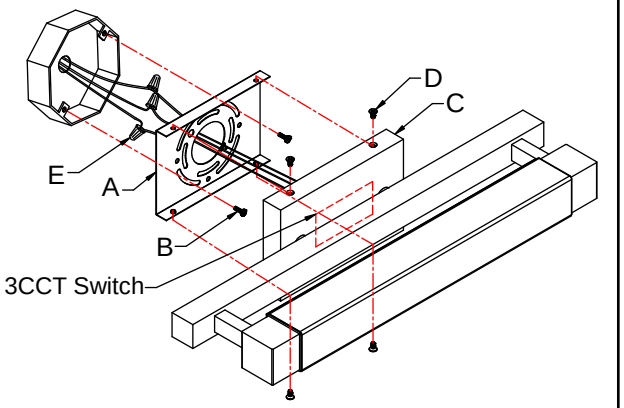

Fig. 2

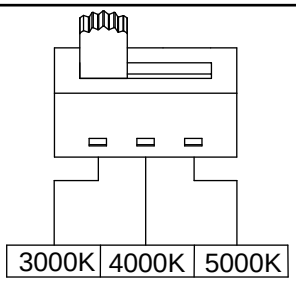

Fig. 3

