Assembly Instructions

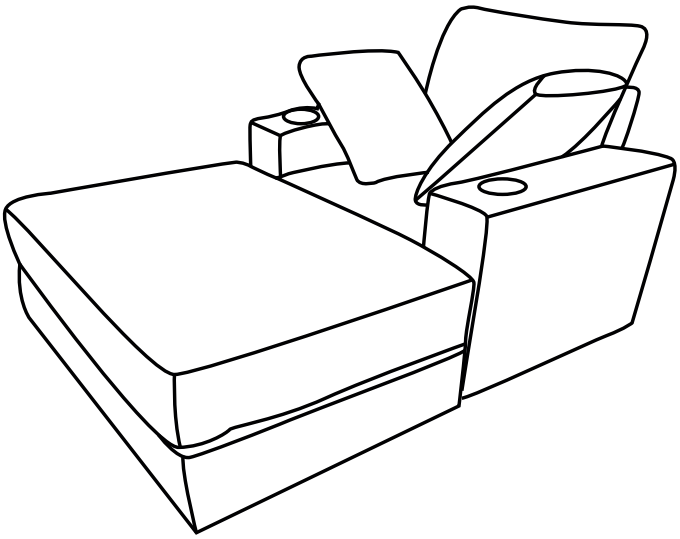

The modular sectional couch will be shipped in multiple boxes.

Box A E044-005-001

The exact number of boxes will be determined by the combination you purchase.

Single person+pedals BoxA

Each package will be dispatched from a different warehouse depending on your shipping address, so they may not arrive at the same time. Each package has its own tracking number, you can check the logistics information through the differrent tracking numbers.

For customers who facing the problem:
You can contact us in several ways.
Way1:Cllick on the seller's name on the order page to contact us.
Way2:Click"Contact Seller”on the product details page to contact us.
Way3: Call Customer Service phone to get assistance.
Way4:Email us:home@homeselecting.com
Way5: Go to the App order page to get further assistance.

MAINTAINANCE
AND WARNING

- Keep furniture away from heat sources.
- Do not clean furniture with harsh cleaner or polishes. Do not use detergents, solvents, abrasives, spray packs or leather cleaner. Use non-color mild soap with warm water to clean spills(Mix 1:10 soap to water).
- Do not place furniture under direct sunlight, material will possibly fade over time.
- Do not use dry cleaning machine.
- Children should not climb or jump on the furniture
- Do not write on furniture that is not protected by a padded barrier.

Weight Capacity

250LBS PER SEAT

PARTS LIST

A

Ax1pc	Bx3pcs	C1x1pc	C2x1pc
Dx1pc	Ex1pc	Fx1pc	Gx1pc

Hx2pcs	Jx8pcs	Ix1pc	Kx2pcs	Lx4pcs

Mx2pcs	Nx2+1pcs M6x16	Ox18+1pcs M6x20	Px9+1pcs M6x35
Qx2+1pcs M6x45	Rx9+1pcs	Sx1pc	Tx8+1pcs

INSTALLATION PROCEDURE

STEP. 1

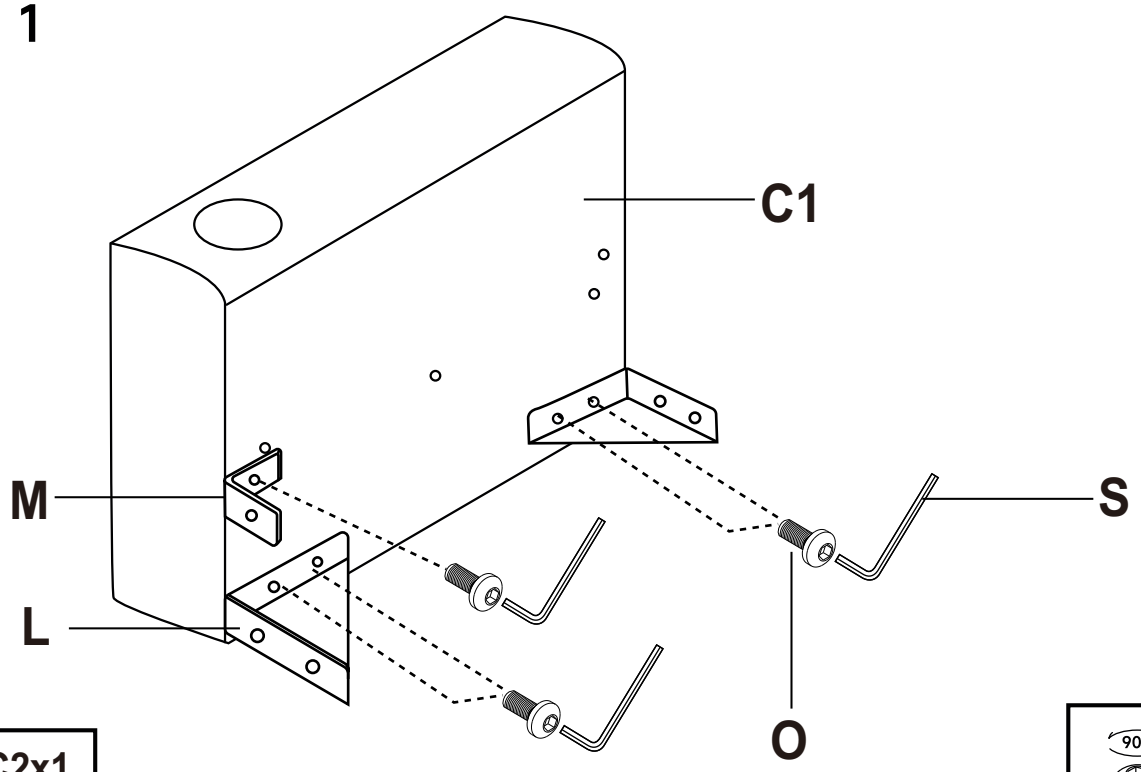

C1x1 C2x1
Lx4 Mx2
Ox10 Sx1

X2 (Left and Right)

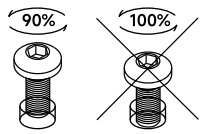

STEP. 2

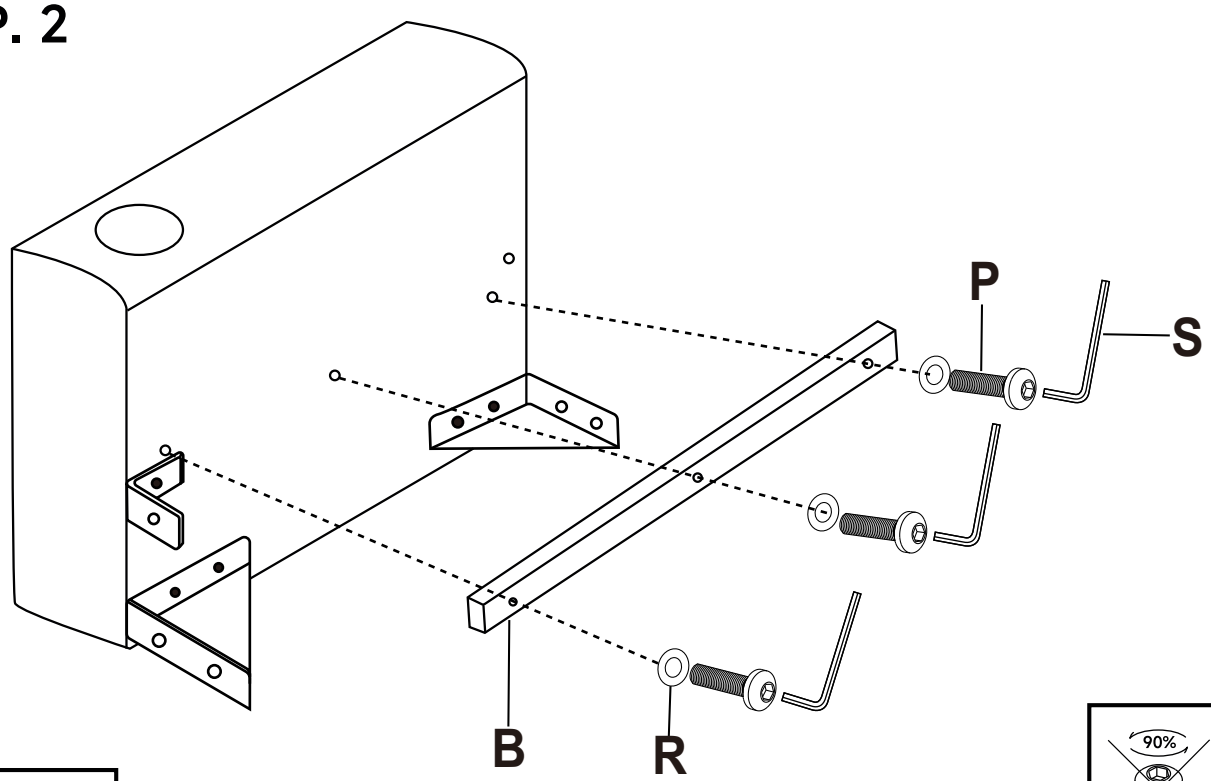

Bx2 Px6
Rx6 Sx1

X2 (Left and Right)

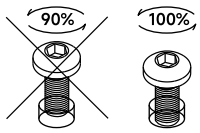

STEP. 3

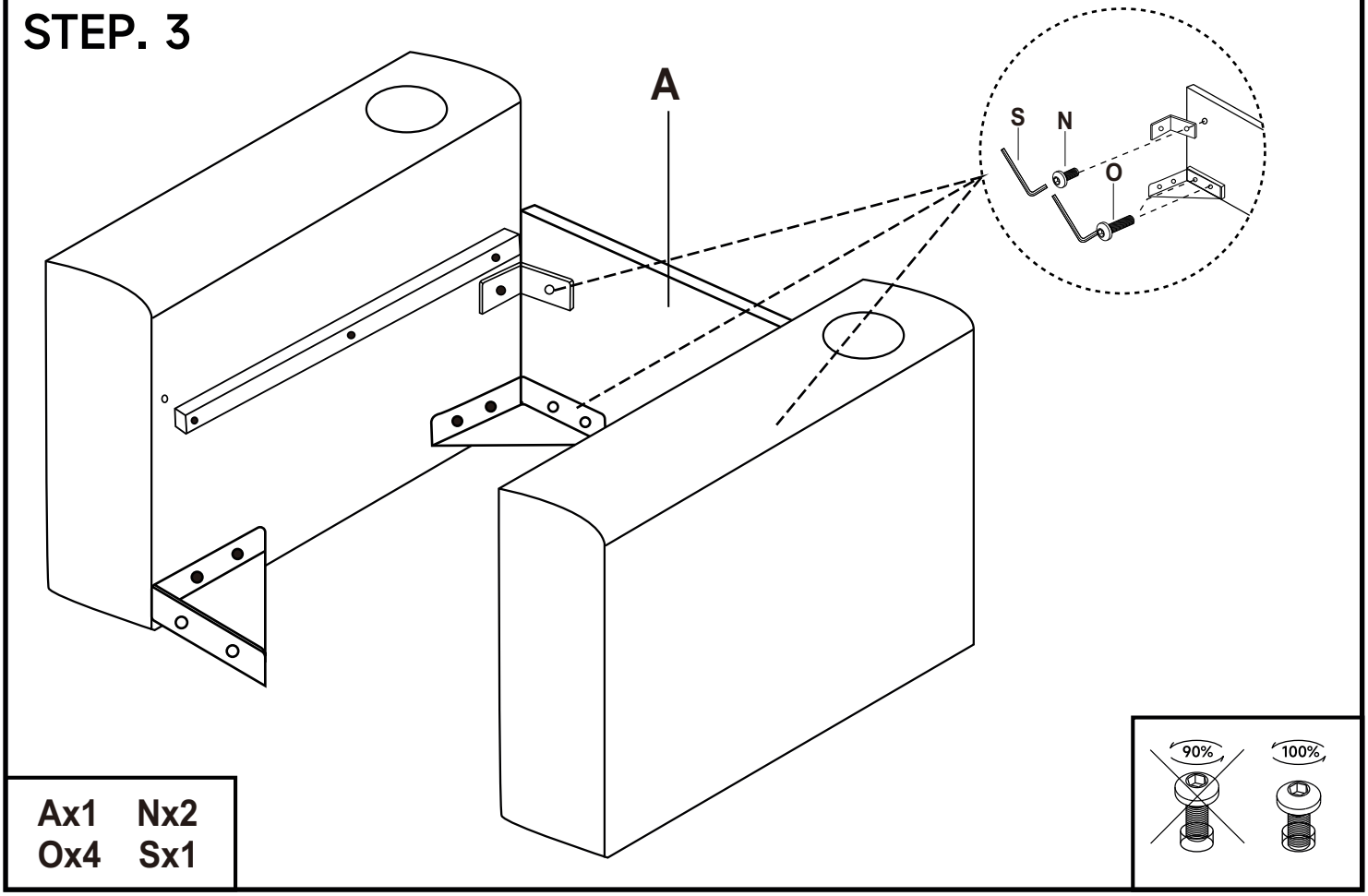

Ax1 Nx2
Ox4 Sx1

STEP. 4

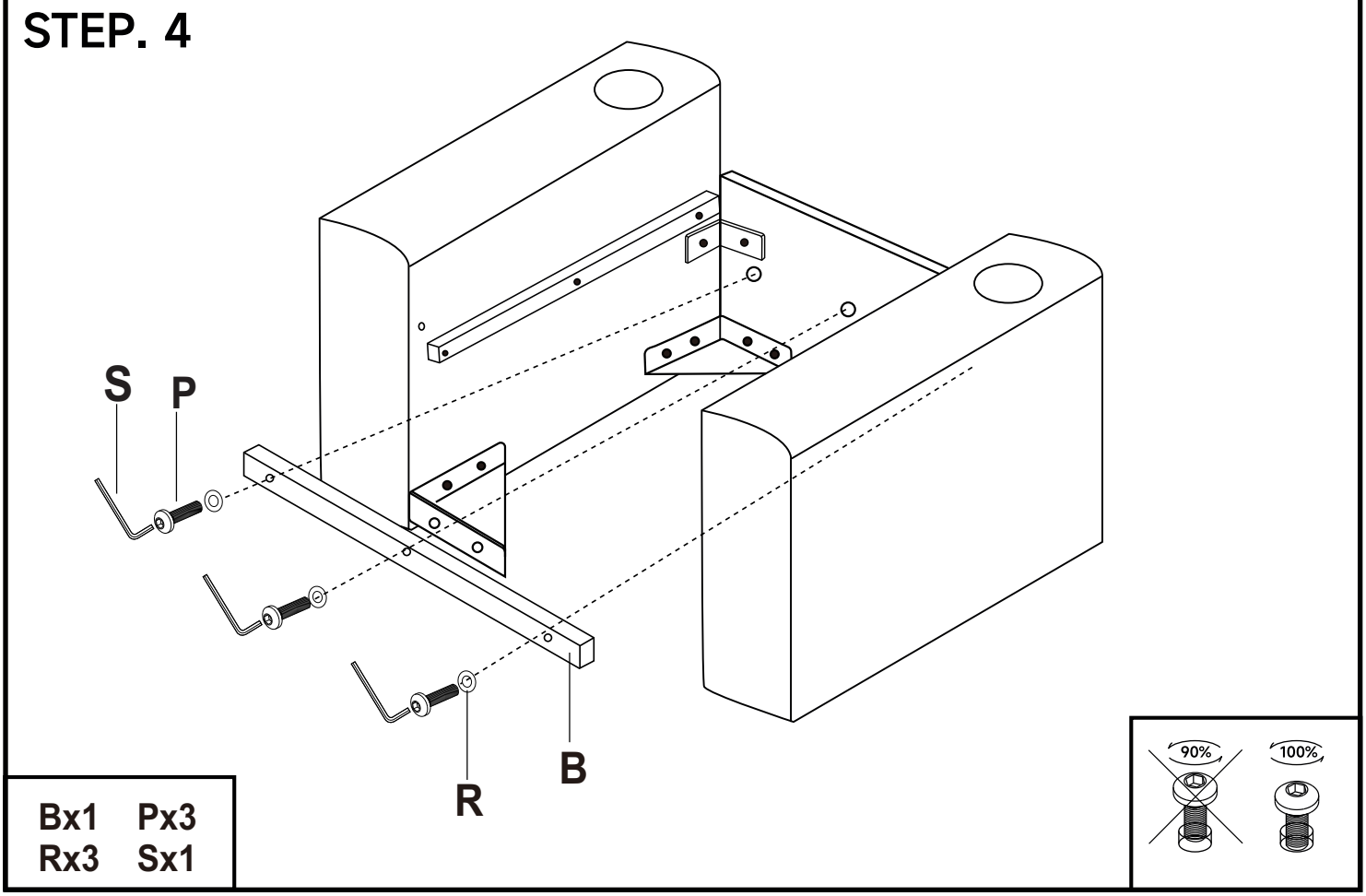

Bx1 Px3
Rx3 Sx1

STEP. 5

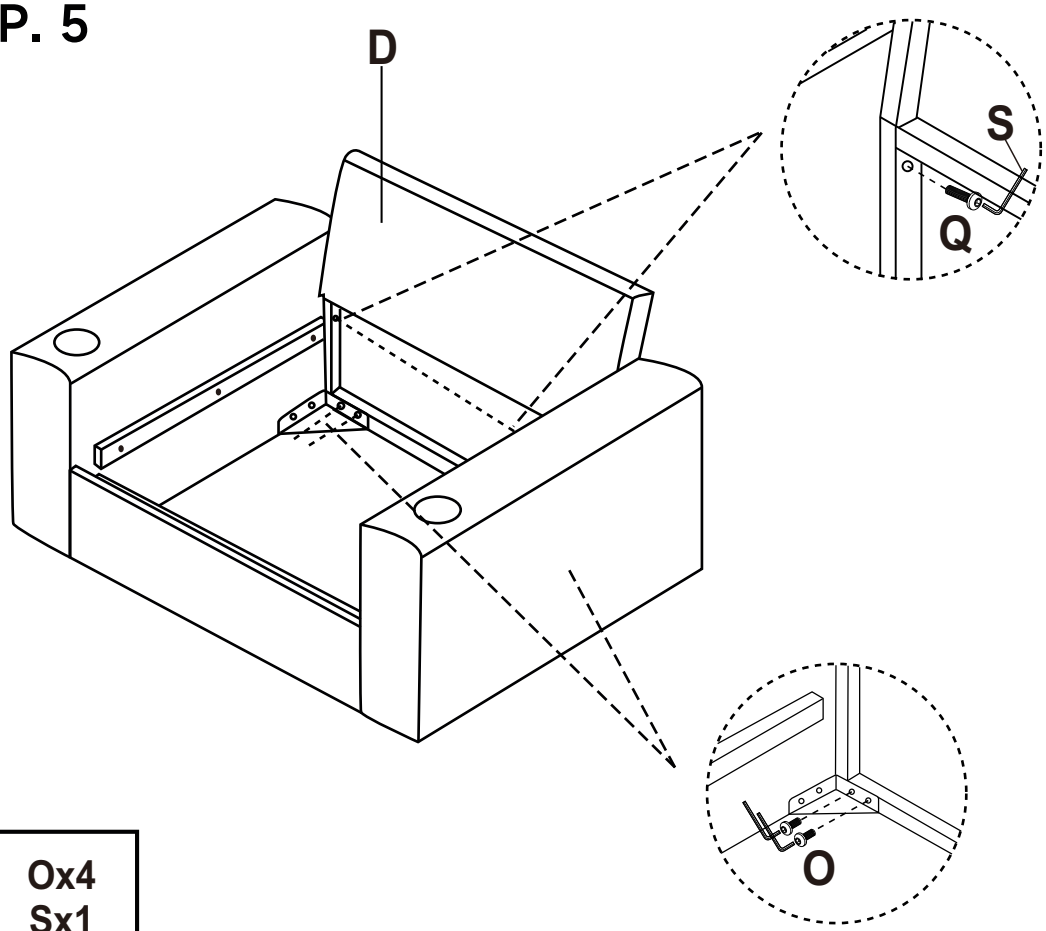

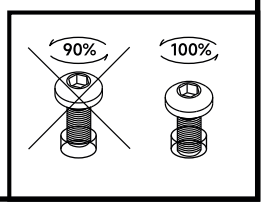

Dx1 Ox4
Qx2 Sx1

STEP. 6

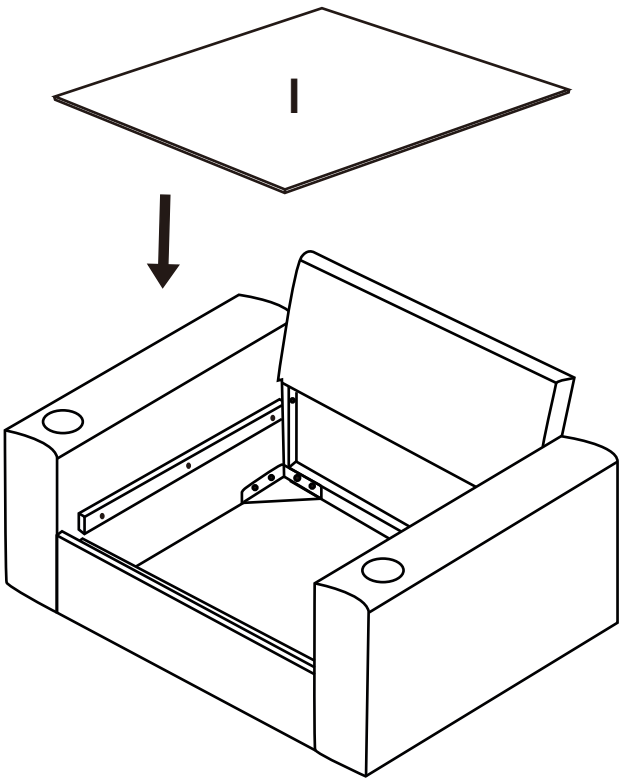

Ix1

STEP. 7

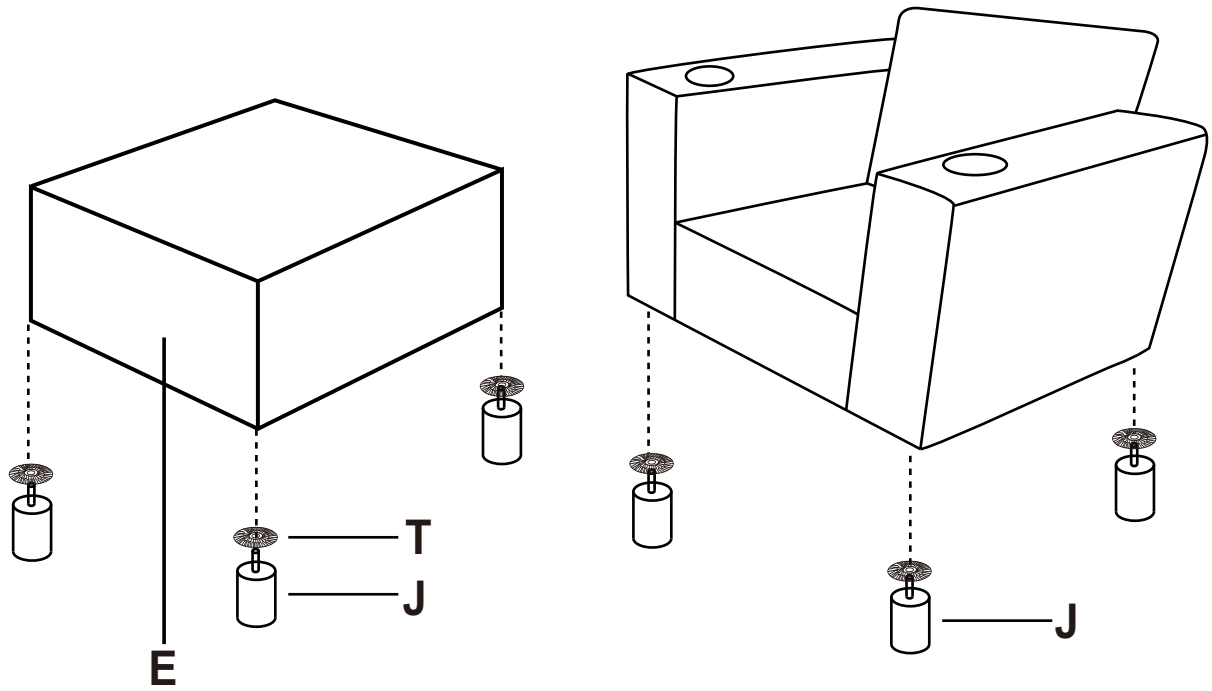

Ex1 Jx8
Tx8

STEP. 8

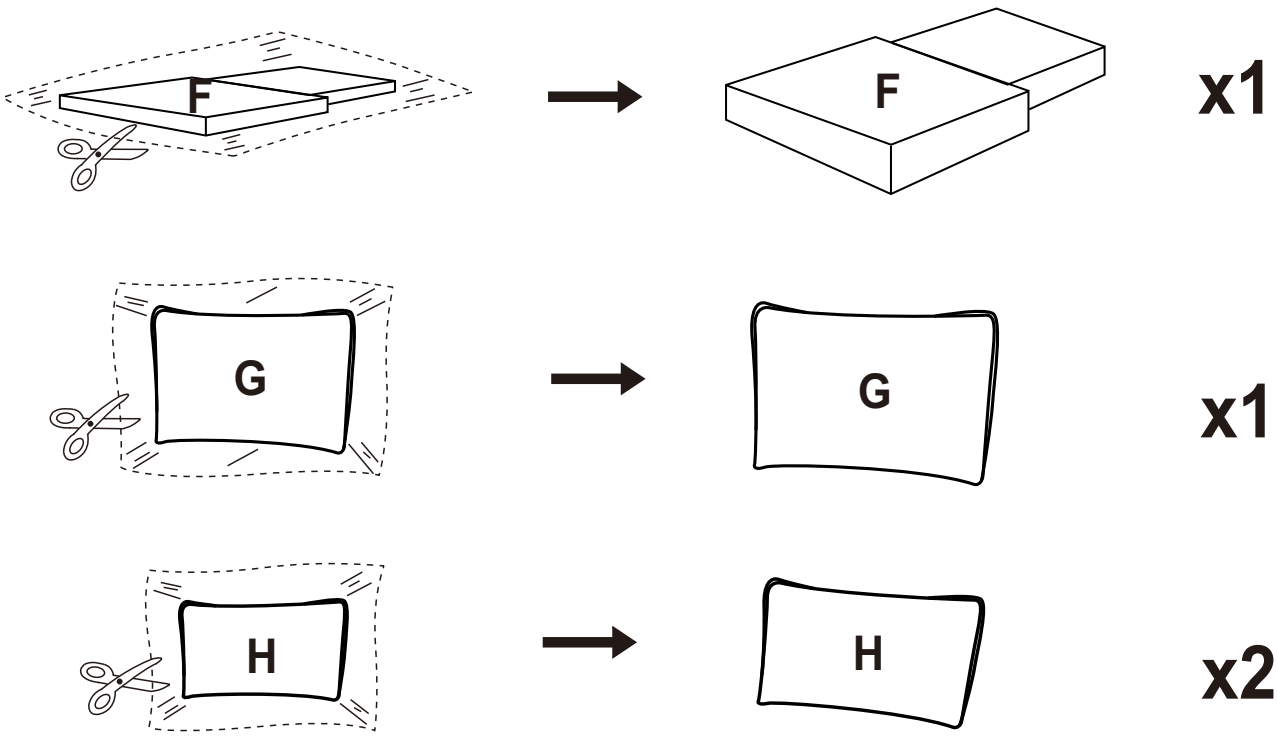

Fx1 Gx1
Hx2

STEP. 9

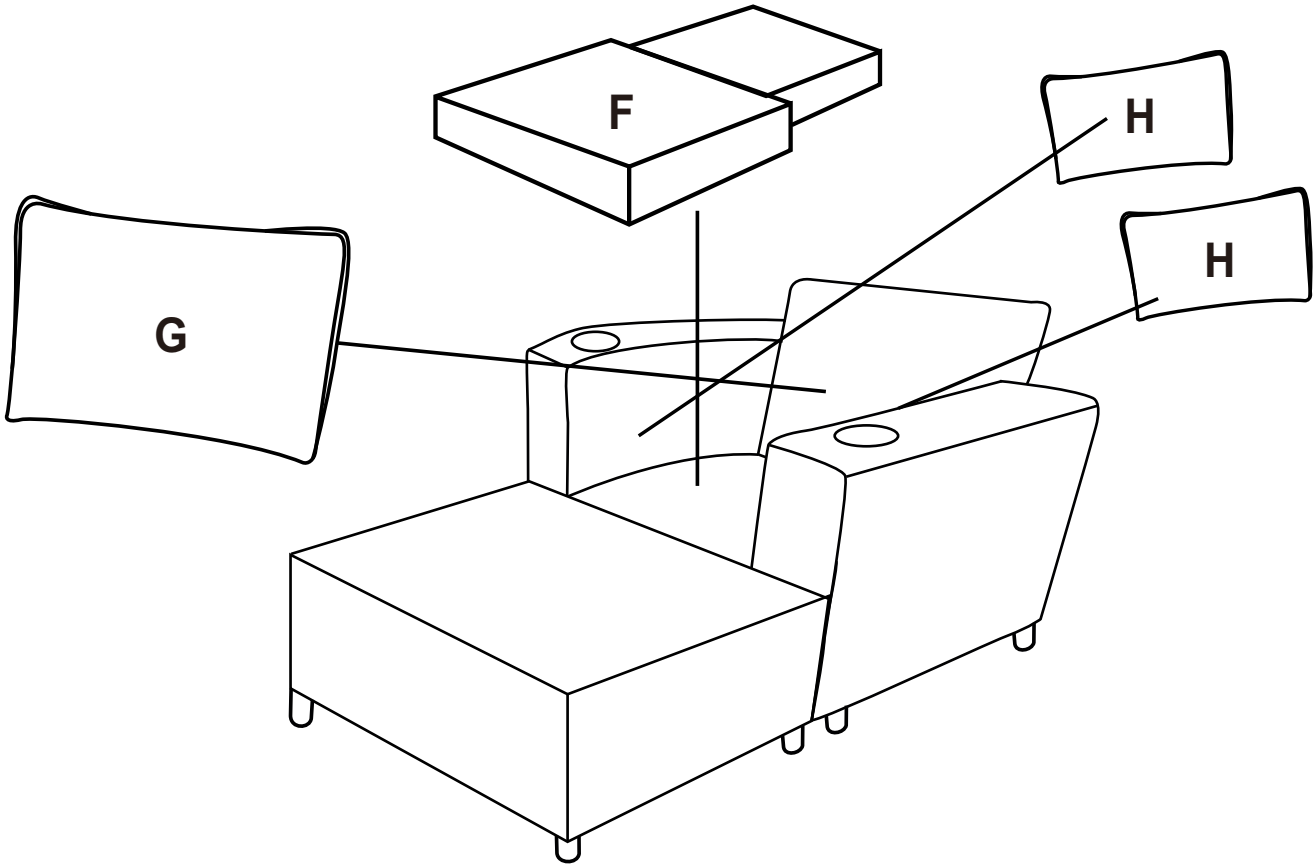

STEP. 10

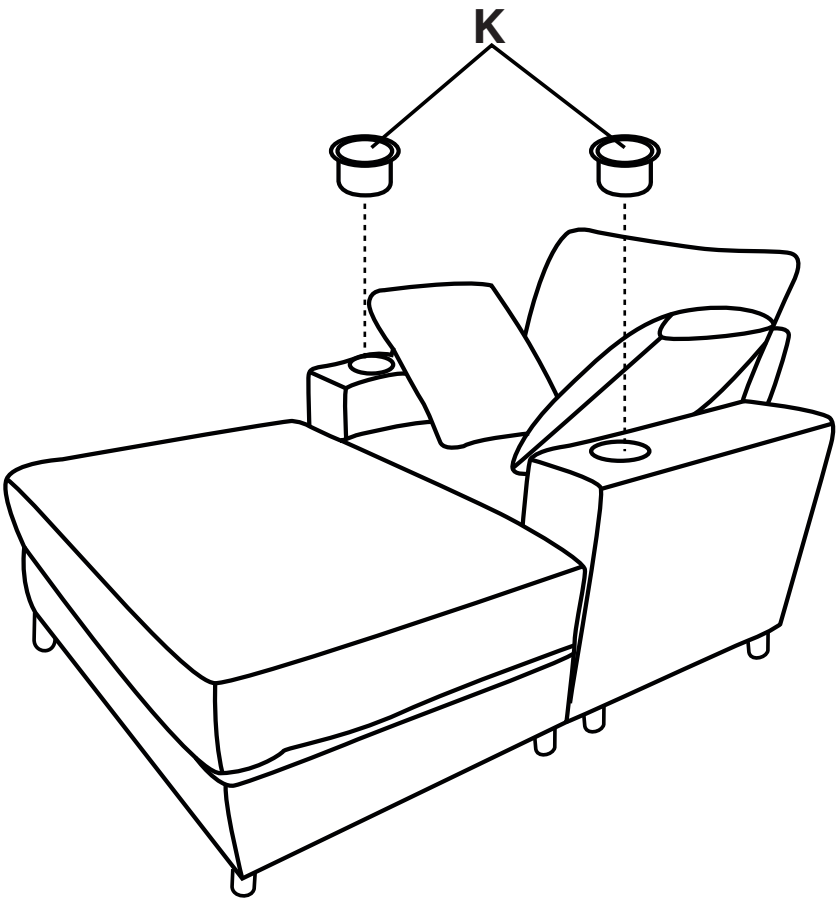

Kx2

WARRANTY

We strive to offer high-quality products and we also try our best to satisfy each customer that orders from us. We provide 1 year warranty starting from the time you receive the item.

Problems you may encounter:

Q: I have only received part of these packages, will I receive any others? Are they still on their way?
A: Please don't worry, as your order is shipped in multiple packages and each package is shipped from different warehouses according to your address, it is normal that you don't receive all packages at the same time. You can contact us to get the tracking numbers of other packages to check the logistics information.
Q: I received all packages but found that a component is missing/broken, can you send me a replacement?
A: Please contact us with clear photos and we will send you the same component.
Q: I used the tracking numbers to check the logistics information, but it has not been updated for a long time, how can I check the latest logistics information?
A: We will contact the courier company to find out the situation and even resend it for you.

.....

No matter what problems you encounter, please feel free to **using the way we listed above** to contact us directly, we will provide you with reasonable solutions.