welcoming • sophisticated • inspiring

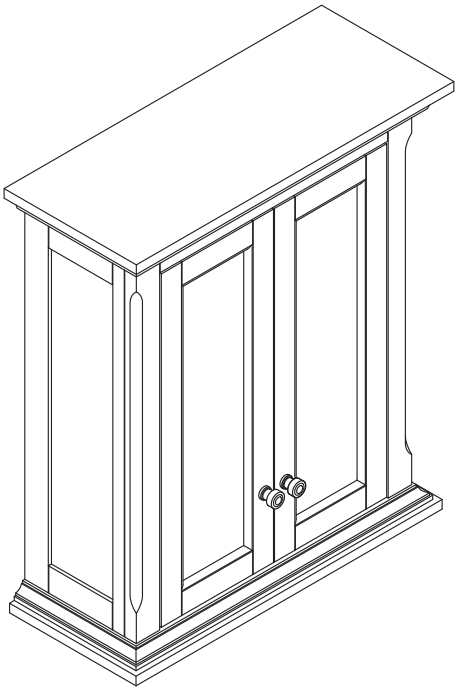

MODEL NUMBER	DESCRIPTION
2026WC-24-242	24" Light Gray Finish Wall Cabinet

WALL CABINET

MODEL #2026WC-24-242

ATTACH YOUR RECEIPT HERE

Serial Number_____ **Purchase Date**_____

Questions, problems or missing parts?
Before returning contact us on:
866-439-9800, 8 a.m. - 8 p.m., EST, Monday - Sunday or ascs@lowes.com.

TABLE OF CONTENTS

Package Contents.....3

Hardware Contents.....3

Safety Information. 3

Preparation 4

Assembly or Installation Instructions 4

Care and Maintenance 7

Warranty 7

Replacement Parts List 8

PACKAGE CONTENTS

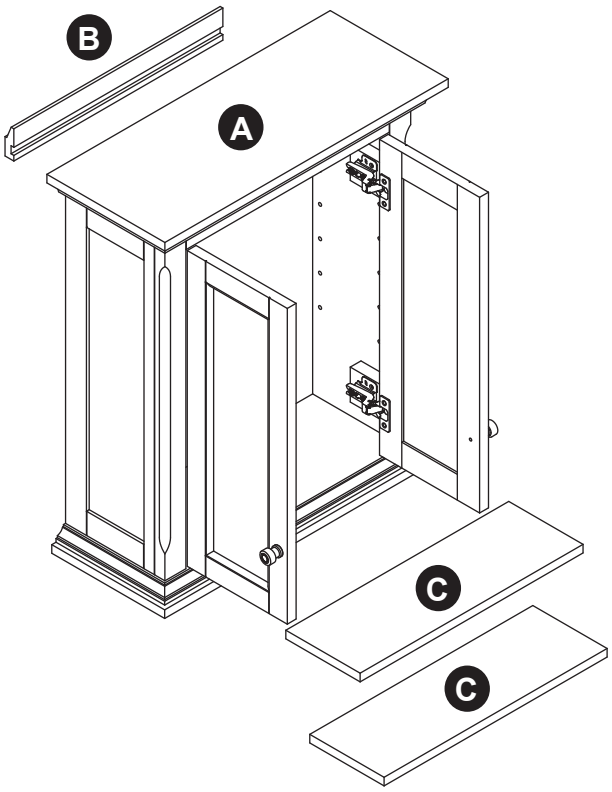

PART	DESCRIPTION	QUANTITY
A	Cabinet	1
B	Wall Bracket	1
C	Shelf	2

HARDWARE CONTENTS (NOT SHOWN ACTUAL SIZE)

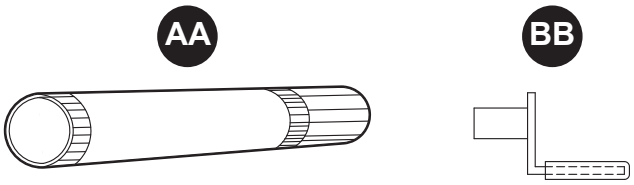

Touch-up Pen
Qty. 1

Shelf Pin
Qty. 8

SAFETY INFORMATION

Please read and understand this entire manual before attempting to assemble, operate or install this product.

WARNING

• Some steps are more easily handled with two adults.

CAUTION

• Before installation, carefully use scissors or utility knife to cut and unwrap all parts. Make sure you DO NOT discard the hardware.
• Use care when installing your new wall cabinet; take your time and follow the installation instructions closely.

KEEP THESE INSTRUCTIONS FOR FUTURE REFERENCE.

PREPARATION

Before beginning assembly of product, make sure all parts are present. Compare parts with package contents list and hardware contents list. If any part is missing or damaged, do not attempt to assemble the product.

Estimated Assembly Time: 20 minutes (24 hours for silicone caulk to dry).

Tools Required for Assembly (not included): Phillips screwdriver, utility knife or scissors, silicone caulk, power drill with drill bit

Helpful Tools (not included): Measuring tape, level

INSTALLATION INSTRUCTIONS

1. Locate Wall Bracket (B) and set aside. Locate and mark wall stud locations where Cabinet (A) will be placed. Center Wall Bracket (B) in desired level location off the floor and mark locations where Wall Bracket (B) meets the location of the wall studs.

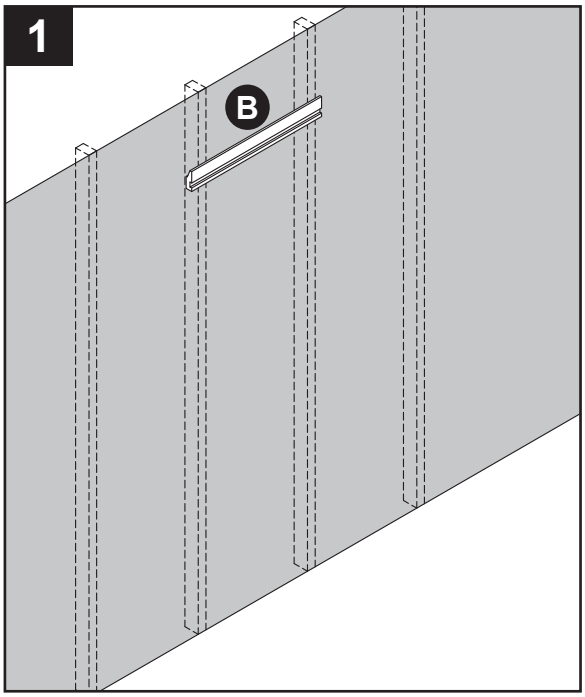

2. Using hardware appropriate for your wall type (not included), secure the Wall Bracket (B) to the wall into preferably 2 wall studs. Use hardware such as cabinet screw or toggle bolt depending on your wall type. Make sure the Wall Bracket (B) is level and centered well to the desired location of the Cabinet (A).
   Be careful not to disturb any electrical or water lines that may be concealed in the wall.
   !IMPORTANT SAFTEY STEP!
   It is critical to have a strong secure connection to the wall before continuing to the next step.

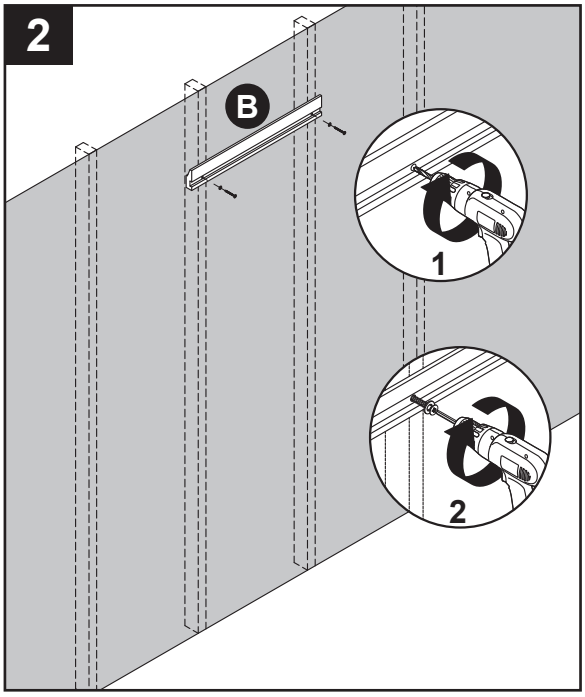

3. With the help of another adult, carefully lower the Cabinet (A) down onto the Wall Bracket (B). Be sure the Cabinet (A) is secure to the wall before letting go.

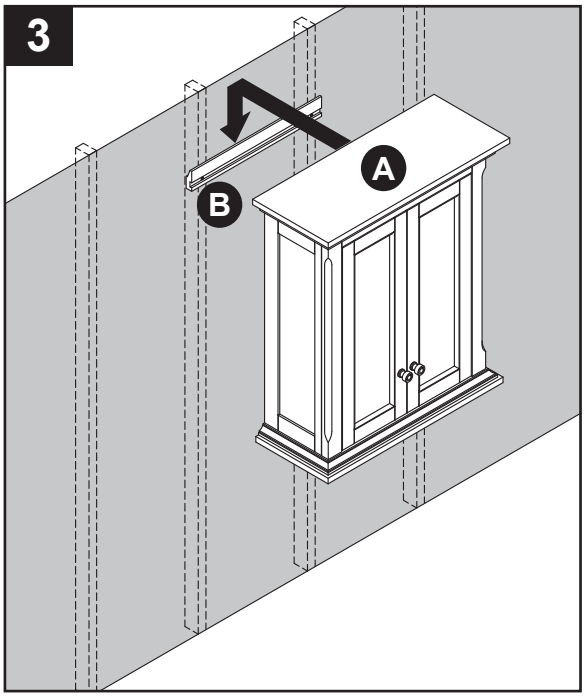

4. Insert shelf pins (BB) at desired height, ensuring they are level. Place shelves (C) on top of shelf pins (BB).

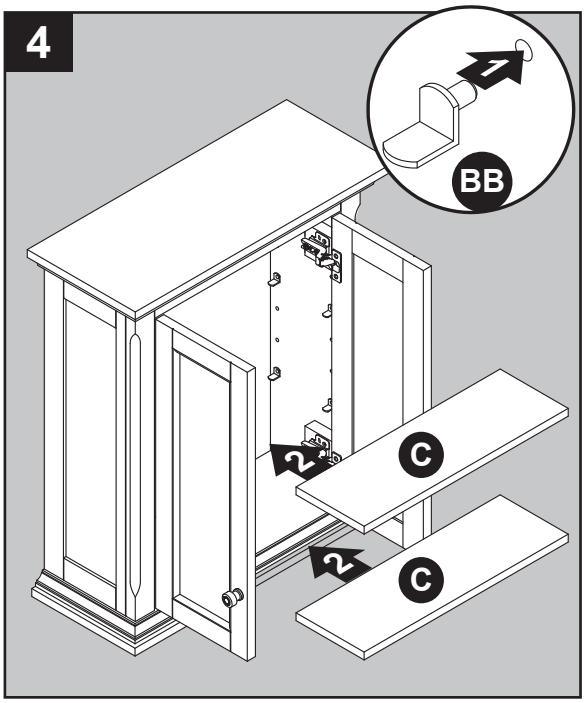

Hardware Used

BB Shelf Pin 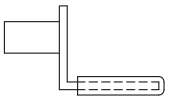 x 8

5. If you need to adjust the doors, do so in the following manner.
   To adjust door up or down, loosen screws (a) on both hinges, adjust door, and retighten screws.
   To adjust door left or right, turn screws (b) on both hinges, in or out.
   To adjust door in or out, loosen screws (c) on both hinges, adjust door, and retighten screws.

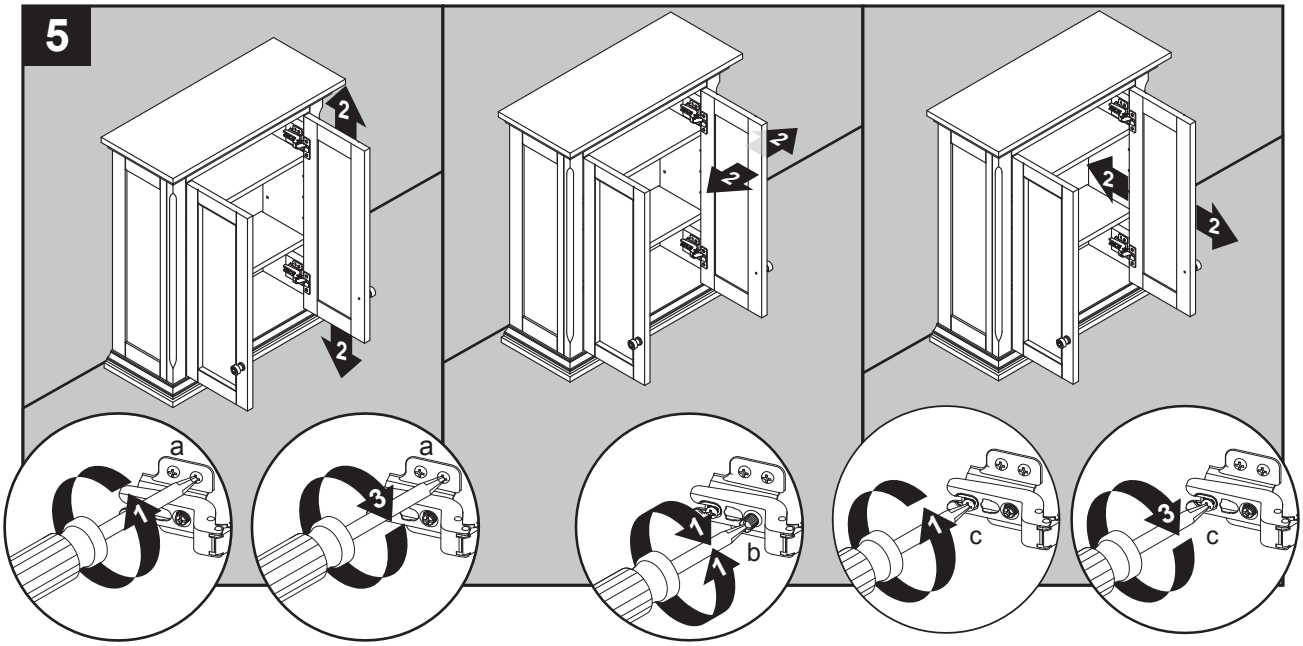

CARE AND MAINTENANCE

- Dust the Wall cabinet regularly with a soft, non-lint producing cloth or household dusting product.
- You can clean the Wall cabinet with a gentle, non-abrasive household cleaner.
- Make sure to dry the wood immediately with a soft cloth or towel.
- Tips for using touch-up pen (AA): For scratches, stroke in direction of scratch. Rub off excess colorant promptly with a soft cloth.

WARRANTY

The manufacturer warrants this item against defects in materials and workmanship for a period of one (1) year from the date of original retail purchase. This warranty applies only to the original purchaser. This warranty does not apply to any damage on the product by accident, misuse, or modified, improper installation or by affixing accessories not produced by the manufacturer. The manufacturer is not accountable whatsoever for product installation during the warranty period. There is no further expressed warranty. The manufacturer shall not be legally responsible for incidental, consequential or special damages arising at or in connection with product use or performance except as may otherwise be accorded by law. The manufacturer disclaims any and all implied warranties.

REPLACEMENT PARTS LIST FOR 2026WC-24-242

For replacement parts, call our customer service department at 866-439-9800, 8 a.m. - 8 p.m., EST, Monday - Sunday.

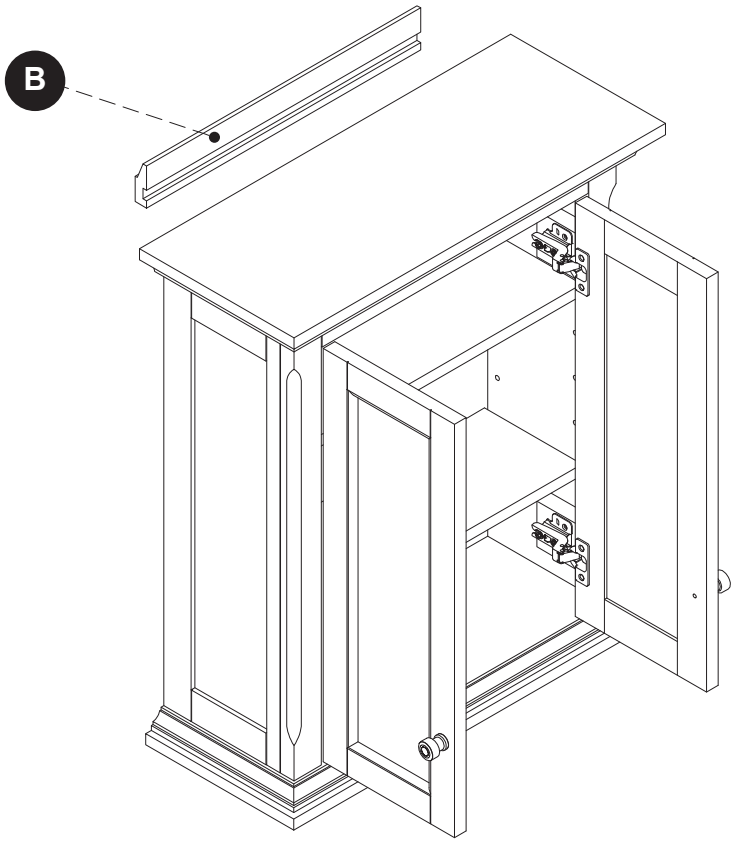

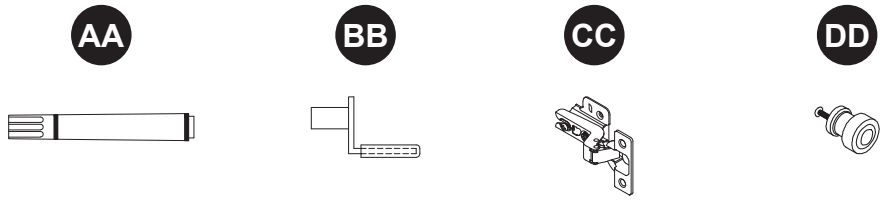

PART	DESCRIPTION	PART#
B	Wall Bracket	2026WC-24-242-001
AA	Touch-up pen	OF-0120R
BB	Shelf pin	B1044
CC	Hinge	C-90-107
DD	Knob (with screw)	CF-D25-005-BN