ITEM #6030895
MODEL #ASH46MBK6LR

ASHBOURNE LED CEILING FAN

Español p. 21

HARBOR BREEZE and logo design are trademarks or registered trademarks of LF, LLC. All rights reserved.

ATTACH YOUR RECEIPT HERE

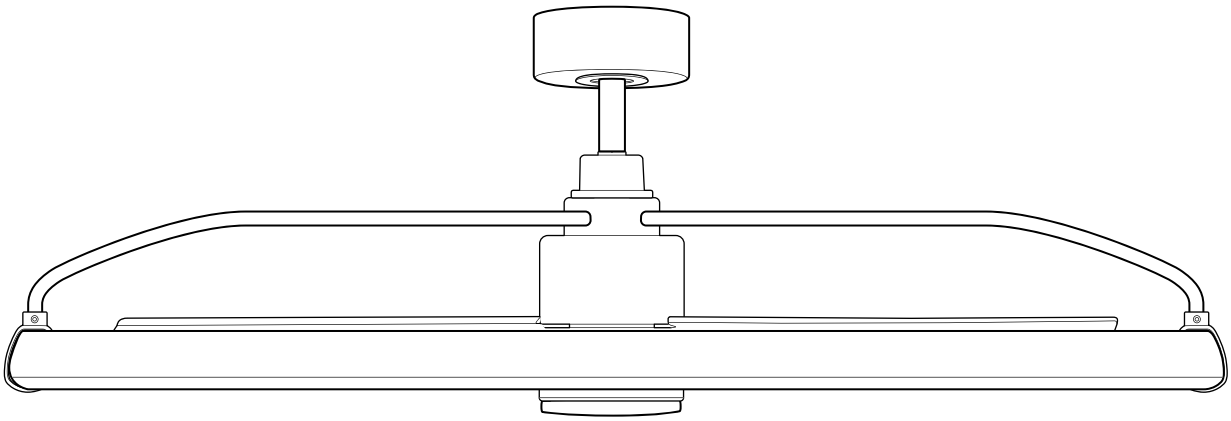

Intertek
4007498

APPROVED FOR USE
IN DAMP LOCATIONS

Purchase Date _____

Thank you for purchasing this HARBOR BREEZE product.
Questions, problems, missing parts?
Before returning, contact us on:
888-251-1003, 8 a.m-8 p.m., EST, Monday-Sunday or **ascs@lowes.com**.

TABLE OF CONTENTS

Safety Information 2

Package Contents 5

Hardware Contents 6

Preparation 6

Initial Installation 6

Wiring 12

Final Installation 14

Operating Instructions 16

Care and Maintenance 18

Troubleshooting 19

Limited Lifetime Warranty 20

Replacement Parts List 20

SAFETY INFORMATION

CAUTION: Changes or modifications not approved by the party responsible for compliance could void the user's authority to operate the equipment.

***NOTE**: This equipment has been tested and found to comply with the limits for a Class B digital device, pursuant to Part 15 of the FCC Rules. These limits are designed to provide reasonable protection against harmful interference in a residential installation. This equipment generates, uses and can radiate radio frequency energy and, if not installed and used in accordance with the instructions, may cause harmful interference to radio communications. However, there is no guarantee that interference will not occur in a particular installation. If this equipment does cause harmful interference to radio or television reception, which can be determined by turning the equipment off and on, the user is encouraged to try to correct the interference by one or more of the following measures:

* Reorient or relocate the receiving antenna.
* Increase the separation between the equipment and receiver.
* Connect the equipment into an outlet on a circuit different from that to which the receiver is connected.

Consult the dealer or an experienced radio/TV technician for help.

The device complies with Part 15 of the FCC Rules. Operation is subject to the following two conditions: (1) this device may not cause harmful interference, (2) this device must accept any interference received, including interference that may cause undesired operation.

Distributed by: Litex Industries Inc., P.O. Box 535639, Grand Prairie, TX, 75050; 800-527-1292

NOTE: Dimmable to 10%.

SAFETY INFORMATION

READ AND SAVE THESE INSTRUCTIONS

Please read and understand this entire manual before attempting to assemble, install or operate the product. Review the accompanying assembly diagrams.

• Do not discard fan carton or inserts. Should this fan need to be returned to the factory for repairs, it must be shipped in its original packaging to ensure proper protection against damage that might exceed the initial cause for return.

• Make sure all electrical connections comply with local codes, ordinances, the National Electrical Code and ANSI/NFPA 70-1999. Hire a qualified electrician or consult a do-it-yourself wiring handbook if you are unfamiliar with installing electrical wiring.

• Make sure the installation site you choose allows a minimum clearance of 7 ft. from the blades to the floor and at least 30 in. from the end of the blades to any obstruction.

• After you install the fan, make sure all connections are secure to prevent the fan from falling.

• The net weight of this fan including the light kit is: 21.38= lbs.

⚠ DANGER

Before installation, be sure to shut off electricity at main switch or circuit breaker in order to avoid electrical shock.

To reduce the risk of serious bodily injury, DO NOT use power tools to assemble any part of the fan, including the blades.

When using an existing outlet box, make sure the outlet box is securely attached to the building structure and can support the full weight of the fan. Failure to do this can result in serious injury or death. The stability of the outlet box is essential in minimizing wobble and noise in the fan after installation is complete.

⚠ WARNING

To reduce the risk of fire, electrical shock or personal injury, mount fan to outlet box marked "ACCEPTABLE FOR FAN SUPPORT OF 35 LBS. (15.87 KG) OR LESS" and use mounting screws provided with the outlet box. Most outlet boxes commonly used for the support of lighting fixtures are not acceptable for fan support and may need to be replaced. Consult a qualified electrician if in doubt.

When mounting fan to a ceiling outlet box, use a METAL octagonal outlet box; do NOT use a plastic outlet box. Secure the outlet box directly to the building structure. The outlet box and its support must be able to support the moving weight of the fan (at least 35 lbs.).

To avoid personal injury, the use of gloves may be necessary while handling fan parts with sharp edges.

To reduce the risk of fire, electrical shock or personal injury, lever wire connectors provided with this fan are designed to accept only one 12-gauge house wire and one lead wire from the fan. If your house wire is larger than 12-gauge or there is more than one house wire to connect to the corresponding fan lead wires, consult an electrician for the proper size lever connectors to use.

SAFETY INFORMATION

⚠ WARNING

To reduce the risk of fire, electrical shock or personal injury, do not bend the blades when installing them, balancing the blades or cleaning the fan. Do not insert objects between the rotating fan blades.

To reduce the risk of personal injury, use ONLY parts provided with this fan. The use of parts OTHER than those provided with this fan will void the warranty.

To reduce the risk of fire or electrical shock, do not use the fan with any solid state speed control device or control fan speed with a full range dimmer switch.

⚠ CAUTION

Ensure the outlet box is properly grounded and that a ground wire (GREEN or BARE) is present.

Do NOT tamper with or attempt to repair LED component. The light source is designed for this specific application and should not be serviced by untrained personnel. If any servicing is required, call our customer service department.

Once installation is complete, carefully check all screws, bolts and nuts on fan motor assembly to ensure that they are secured.

Due to the weight and construction of this fan, it is advisable to seek the help of another person.

The DC Motor will not operate until blades are installed.

PACKAGE CONTENTS

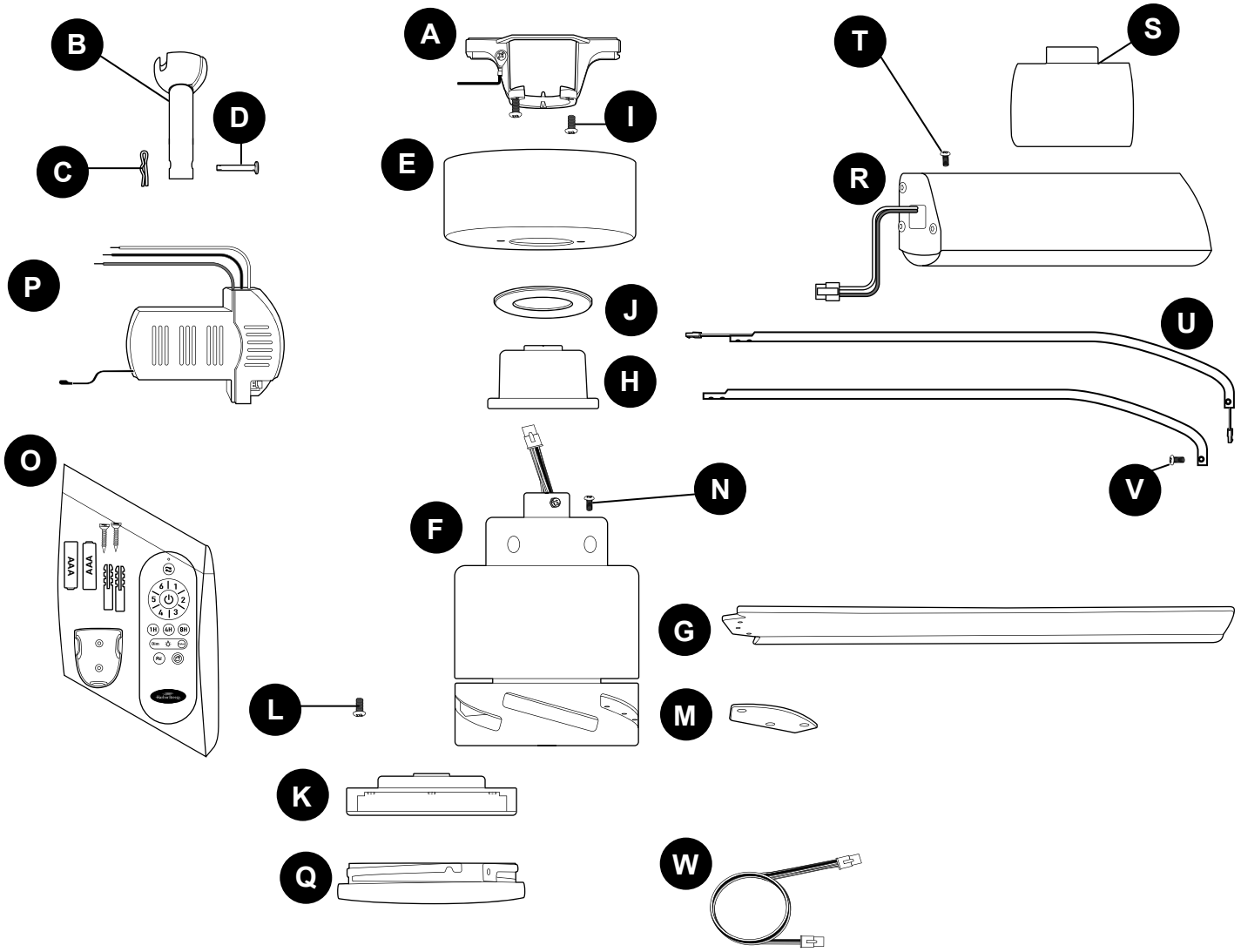

PART	DESCRIPTION	QUANTITY
A	Mounting Bracket	1
B	Downrod	1
C	Clip (preassembled)	1
D	Pin (preassembled)	1
E	Canopy	1
F	Motor Housing	1
G	Blade	6
H	Yoke Cover	1
I	Canopy Mounting Screw (preassembled)	2
J	Canopy Cover	1
K	Fitter Plate	1
L	Motor Plate Screw (preassembled)	3

PART	DESCRIPTION	
M	Blade Plate	6
N	Motor Housing Screw (preassembled)	10
O	Remote Pack	1
P	Remote Control Receiver	1
Q	Metal Cover	1
R	LED Segment	5
S	LED Connector (preassembled)	5
T	LED Connector Screw (preassembled)	10
U	Support Arm	5
V	Support Arm Screw (preassembled)	10
W	Additional Wiring	2

⚠ **IMPORTANT REMINDER:** You must use the parts provided with this fan for proper installation and safety.

HARDWARE CONTENTS (shown actual size)

AA	BB
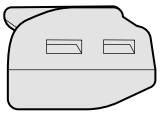	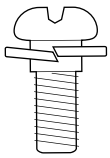
Lever Wire Connector	Blade Screw/ Lock Washer
Qty. 3	Qty. 18 + 1 extra

PREPARATION

Before beginning assembly of product, make sure all parts are present. Place motor on carpet or on foam to avoid damage to finish. Compare parts with package contents list and hardware contents list. If any part is missing or damaged, do not attempt to assemble the product.

Estimated Assembly Time: 120 minutes

Tools Required for Assembly (not included): Electrical Tape, Phillips Screwdriver, Pliers, Safety Glasses, Stepladder, Wire Strippers and Precision Screwdriver (2 in.)

Helpful Tools (not included): AC Tester Light, Tape Measure, Do-It-Yourself Wiring Handbook and Wire Cutters

INITIAL INSTALLATION

1. Turn off circuit breakers and wall switch to the fan supply line leads.

   ⚠ **DANGER:** Failure to disconnect power supply prior to installation may result in serious injury or death.

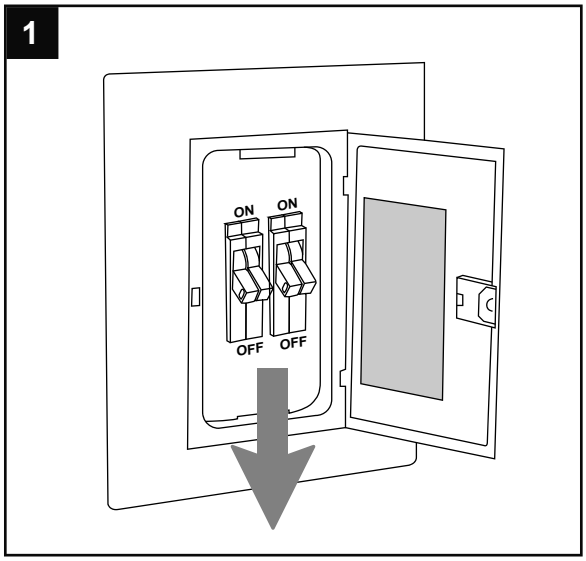

INITIAL INSTALLATION

2. If applicable, remove existing fan and fan parts, including the mounting bracket, from outlet box and disconnect all electrical wiring.

   ⚠ **WARNING:** To reduce the risk of personal injury, use *ONLY* parts provided with your new fan. The use of parts *OTHER* than those provided with this fan will void the warranty.

   Set aside screws, spring washers and flat washers (provided with the outlet box) for fan installation.

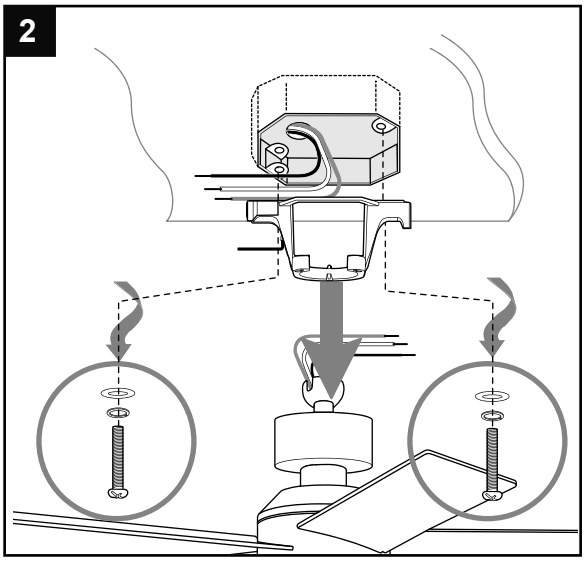

3. Determine mounting method to use for new fan.
   A. Standard mount
   B. Angle mount

   IMPORTANT: If using the angle mount, ensure the ceiling angle is not steeper than 16°.

   NOTE: Closemount option is not available for this fan.

   ***Helpful Hint:** Downrod-style mounting is best suited for ceilings 8 ft. high or higher. For taller ceilings you may want to use a longer downrod (not included). Angle-style mounting is best suited for angled or vaulted ceilings. A longer downrod is sometimes necessary to ensure proper blade clearance.

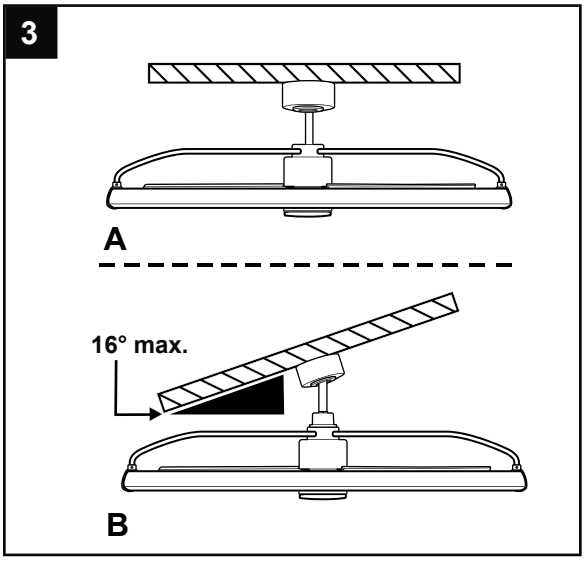

4. Check to make sure fan will be at least 30 inches from any obstruction. Check downrod (B) length to ensure blades (G) will be at least 7 ft. above the floor.

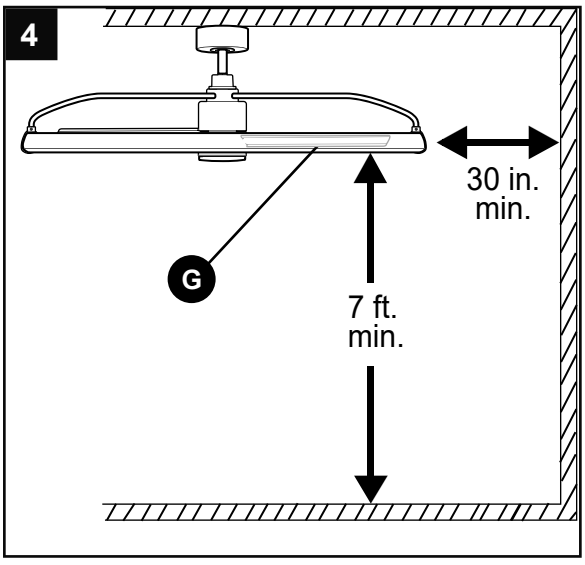

INITIAL INSTALLATION

5. ***If attaching mounting bracket (A) to an existing outlet box (not included) with pre-installed screws***, spring washers and flat washers, slide mounting bracket (A) over the screws. *Then proceed to the following paragraph.* ***If attaching mounting bracket (A) to outlet box where screws/washers were removed***, secure mounting bracket (A) to outlet box using the screws, spring washers and flat washers previously removed in (Step 2, page 7).

   ⚠ **WARNING:** It is very important you use the proper hardware when installing the mounting bracket as this will support the fan.

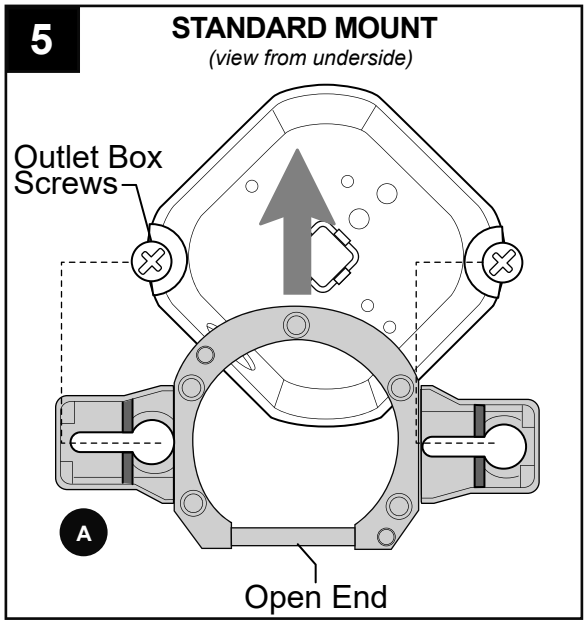

5a. ⚠ **DANGER:** To reduce the risk of serious injury or death, the outlet box screws MUST be installed somewhere within the long slots of the mounting bracket and then TIGHTENED DOWN COMPLETELY. [Refer to Fig. 5a.]

5b. ⚠ **DANGER:** To reduce the risk of fire, electrical shock, serious personal injury or damage to the fan, make sure outlet box screws DO NOT get installed on or near the wall that separates the keyhole and the long, narrow slot on each side of the mounting bracket. [Refer to Fig. 5b.]

   ⚠ **WARNING:** If using the angle mount, make sure open end of mounting bracket (A) is installed facing the higher point of the ceiling, and ensure the ceiling angle is not steeper than 16°.

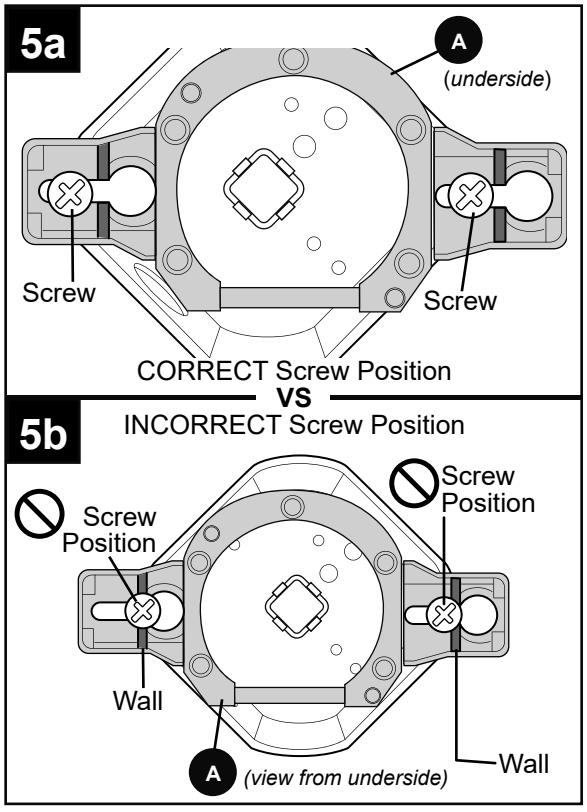

INITIAL INSTALLATION

6a. **IMPORTANT**: Due to the size of this fan, it is recommended to carefully assemble fan on the ground.

Remove 2 LED connector screws (T) from end of LED segment (R). Align the end of LED connector (S) with end of LED segment (R).

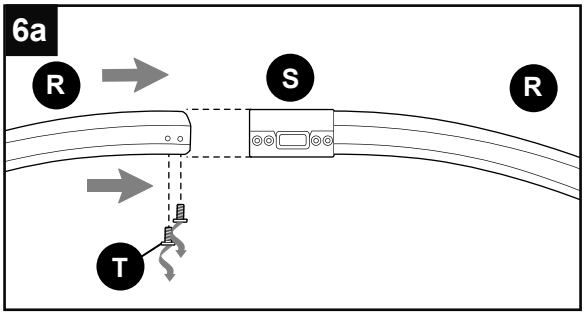

6b. Connect plug from LED segment (R) to the plug from LED connector (S). Slide the end of the LED segment (R) into the LED connector (S), aligning screw holes. Re-insert the 2 LED connector screws (T) into LED connector (S) and partially tighten screws with a Phillips screwdriver to attach LED segment (R) to LED connector (S). Make sure that the wires are not caught between the LED segments (R) and LED connector (S), Repeat this step until LED ring is complete.

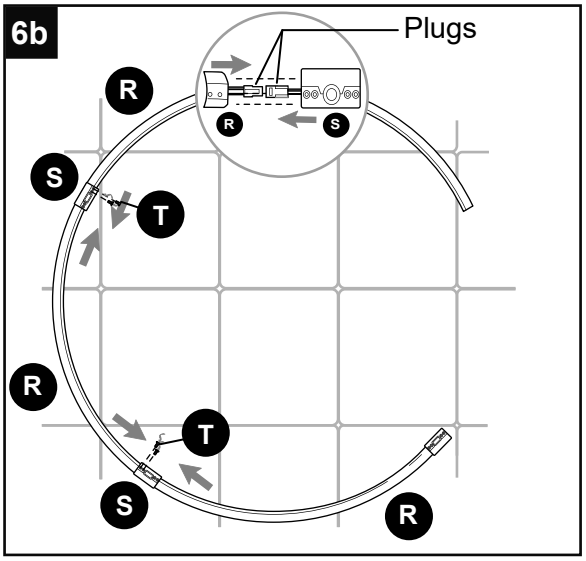

7. Remove preassembled motor housing screws (N) located on top side of motor housing (F). Save for later use.

Locate support arm hole on top of motor housing (F) nearest to opening on the yoke.

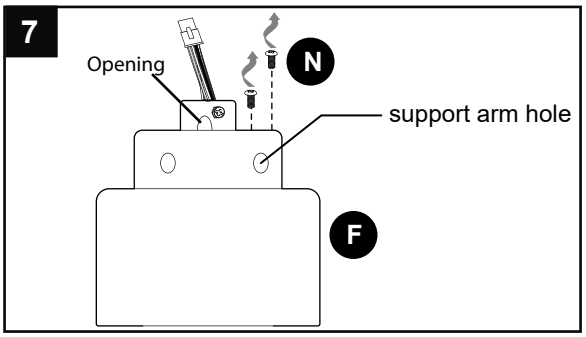

8. Locate support arm (U) with wiring. Thread wiring through support arm hole identified in previous step. Then, insert the support arm (U), aligning motor housing screw (N) holes as shown. Secure support arm (U) to top of motor housing (F) by replacing 2 motor housing screws (N) with a Phillips screwdriver (not included).

Thread wiring in support arm (U) with wires through the opening on the yoke.

Repeat for remaining support arms (U). making sure motor housing screws (N) are securely tightened.

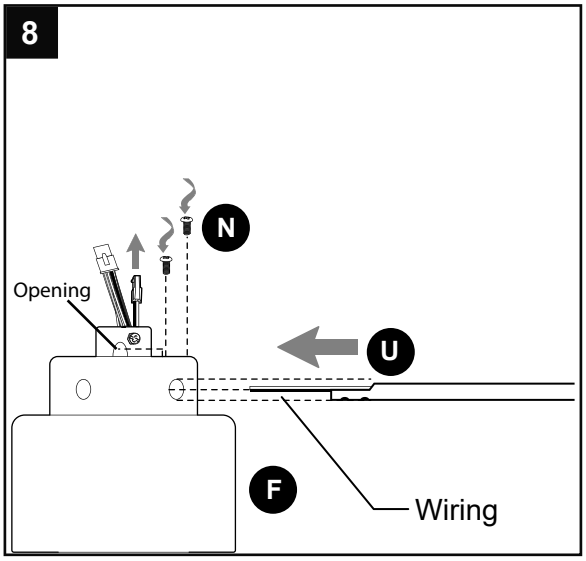

INITIAL INSTALLATION

9. Remove preassembled support arm screws (V) from curved end of support arms (U), and save for later use.

   Locate LED connector (S) with wiring on LED ring.

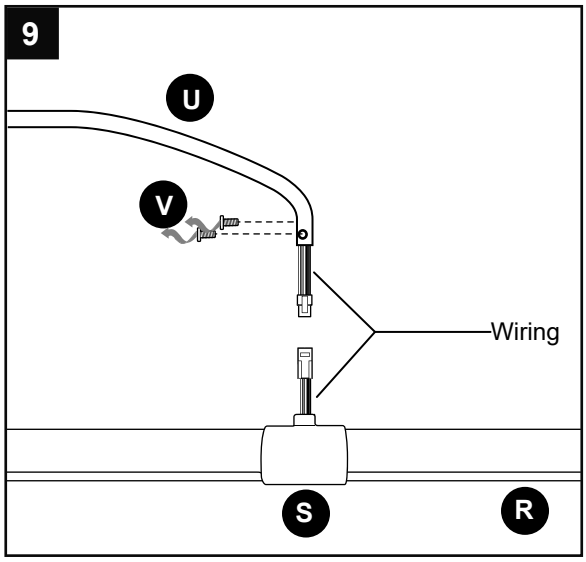

10. Align curved end of support arm (U) with wiring, with hole on LED connector (S) with wiring identified in previous step. Connect plug from support arm (U) to plug from LED connector (S). Make sure connections are secure. Carefully insert wiring into LED connector (S). Insert curved end of support arm (U) into the LED connector (S) aligning screw holes on curved end with screw holes in neck of LED connector (S). Insert 2 support arm screws (V) previously removed and partially secure the screws to attach support arm (U). **NOTE**: Do NOT completely tighten support arm screws (V), as this will be done on the following step.

    Repeat procedure for remaining support arms (U).

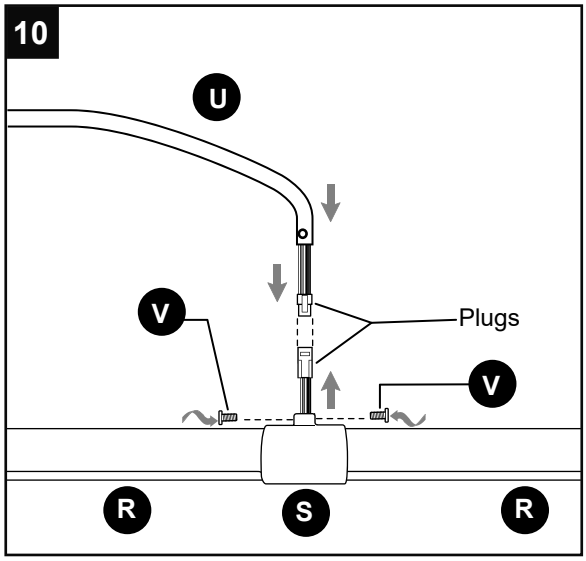

11. Once each support arm (U) is attached to an LED connector (S) completely tighten all support arm screws (V) securely with a Phillips screwdriver.

    IMPORTANT: Once the LED ring assembly is complete, make sure all screws are securely tightened with a Phillips screwdriver.

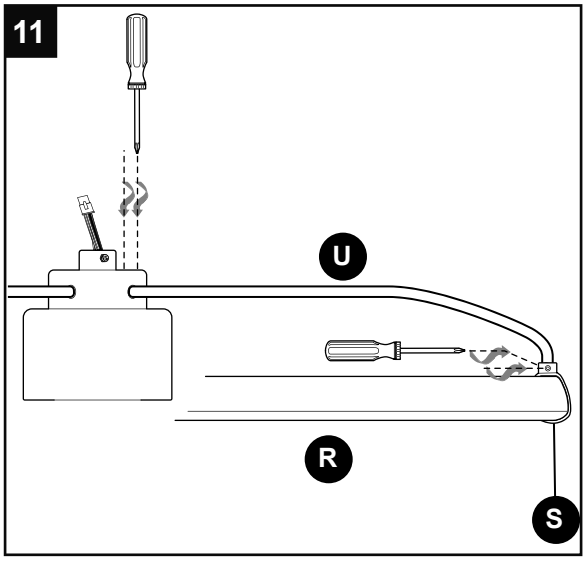

INITIAL INSTALLATION

12a. Remove pin (D) and clip (C) from downrod (B).

12b. Partially loosen preassembled set screws and nut in yoke at top of motor housing (F).

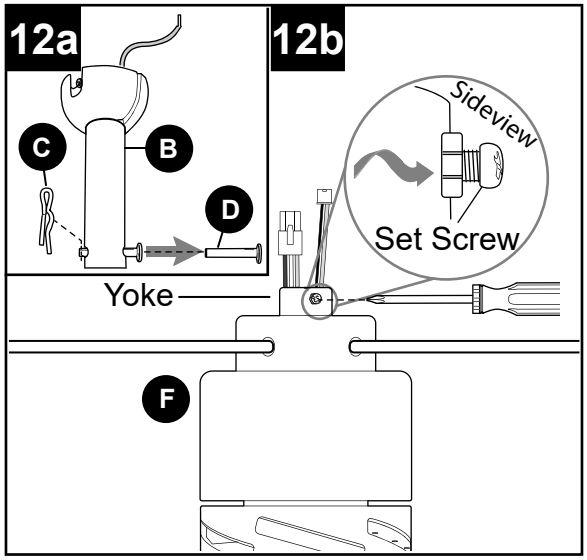

13a. Remove stop pin from downrod (B) by loosening set screw on hanging ball. Lower hanging ball and remove stop pin.

13b. Insert downrod (B) through canopy (E), canopy cover (J) and yoke cover (H).

Thread wires from motor housing (F) through downrod (B). Raise hanging ball, replace stop pin and tighten set screw.

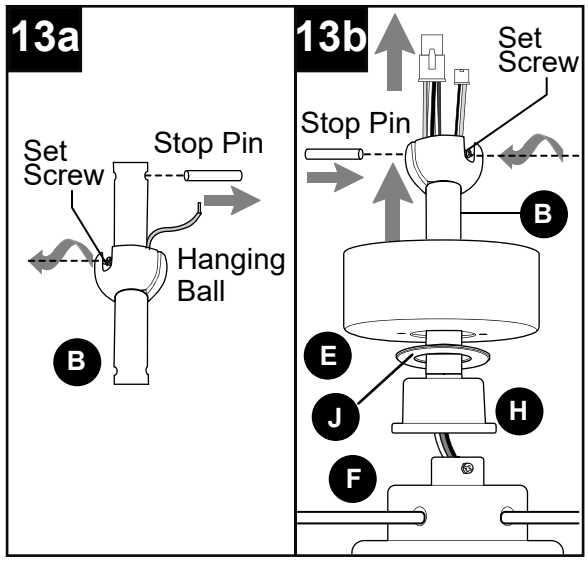

14. Slip downrod (B) into motor housing yoke, align holes and re-install pin (D) and clip (C). Tighten set screws in motor housing yoke and then tighten preassembled nut on one of the set screws. Then, slide yoke cover (H) down until it rests on top of motor housing (F).

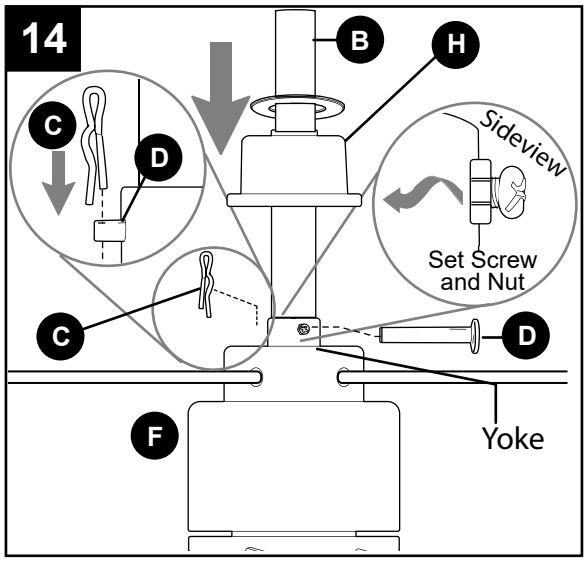

INITIAL INSTALLATION

15. Depending on the length of downrod you use, you may need to use the additional wiring (W).

    Connect male plugs from motor housing (F) to the ends of additional wiring (W) with female plugs matching up the colors on the plugs for correct fit. Make sure plugs connect tightly.

    NOTE: If you do ***not*** use additional wiring (W), ***Step 15 is not necessary and you may proceed to Step 16 instead***.

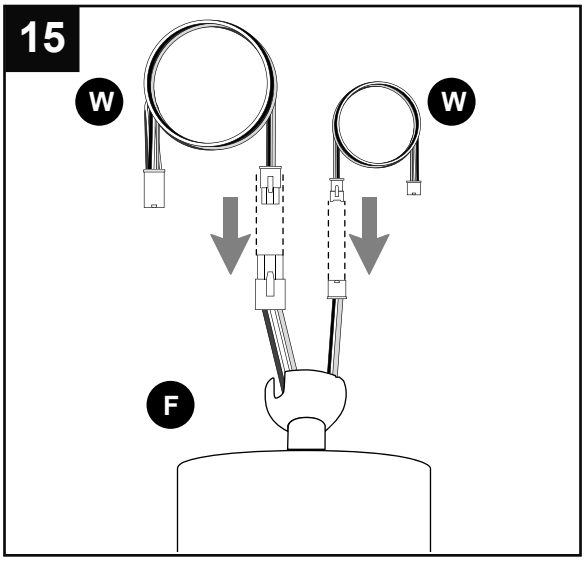

16. ⚠ **CAUTION**: Due to the weight and construction of this fan, it is advisable to seek the help of another person to hang the fan.

    Install hanging ball of downrod (B) into opening of mounting bracket (A). Align one of the slots in hanging ball with tab in mounting bracket (A).

    ⚠ **DANGER:** Failure to align one of the slots in the ball with the tab may result in serious injury or death.

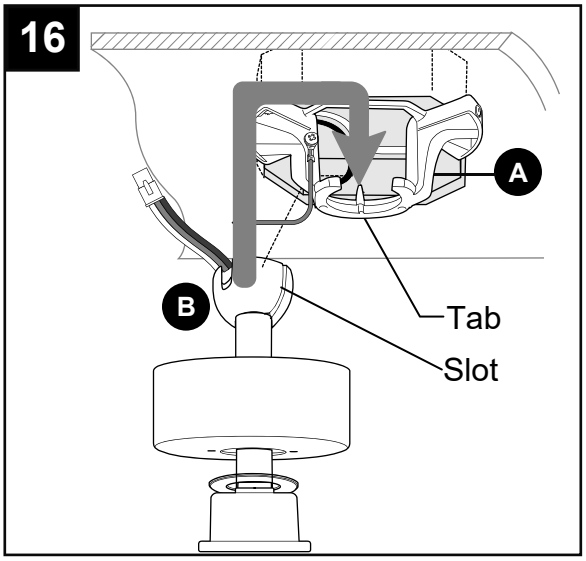

WIRING

⚠ **WARNING:** To reduce the risk of fire, electrical shock or personal injury, lever wire connectors provided with this fan are designed to accept only one 12-gauge house wire and one lead wire from the fan. If your house wire is larger than 12-gauge or there is more than one house wire to connect to the corresponding fan lead wires, consult an electrician for the proper size lever wire connectors to use.

⚠ **CAUTION:** Be sure outlet box is properly grounded and that a ground (GREEN or BARE) wire is present.

⚠ **WARNING:** If house wires are different colors than referred to in the following steps, stop immediately. A professional electrician is recommended to determine wiring.

⚠ **WARNING:** Using a full range dimmer switch (not included) to control fan speed will cause a loud humming noise from fan. To reduce the risk of fire or electrical shock, do NOT use a full range dimmer switch to control fan speed.

WIRING

1. **IMPORTANT:** Make the necessary wiring connections for remote control operation as detailed in Step 2 below. Each wire connection is made by firmly raising the levers on each lever wire connector (AA), as shown. Then, ONE wire is inserted into each opening.

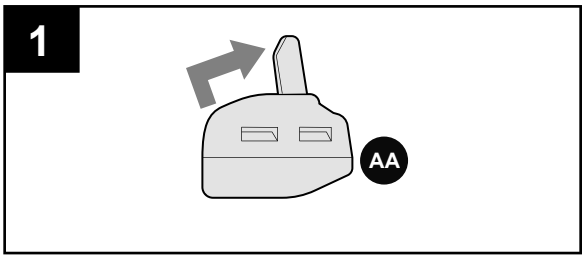

2. Insert each GROUND (GREEN) wire from fan (on downrod (B), and mounting bracket (A)), remote control receiver (P) and the BARE/GREEN supply wire from ceiling into openings in lever wire connector (AA) with five levers.

   Insert BLACK wire (labeled AC IN L) from remote control receiver (P) and BLACK supply wire from ceiling into openings in lever wire connector (AA).

   Insert WHITE wire (labeled AC IN N) from remote control receiver (P) and WHITE supply wire from ceiling into openings in lever wire connector (AA).

   Connect male plugs from motor housing (F) into corresponding female plugs on remote control receiver (P). Make sure plugs connect tightly.

   NOTE: BLACK wire is hot power for fan. WHITE wire is neutral for fan. GREEN or BARE wire is the ground.

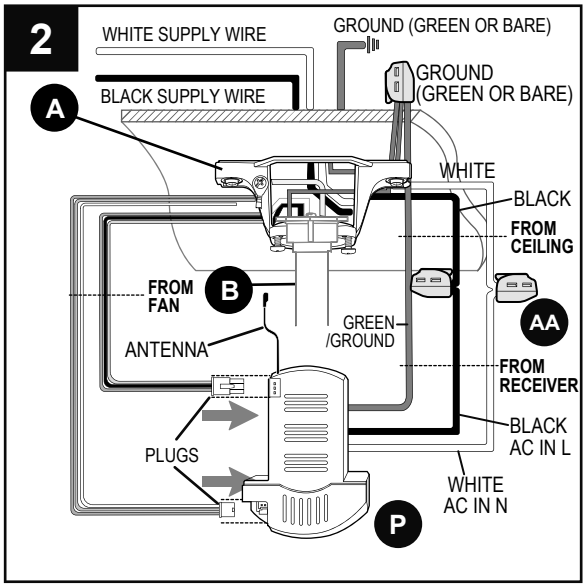

3. Wrap electrical tape around each individual lever wire connector (AA) down to the wire.

   ⚠ **WARNING:** Make sure no bare wire or wire strands are visible after making connections. Place GREEN and WHITE connections on opposite side of box from the BLACK and BLUE (if applicable) connections.

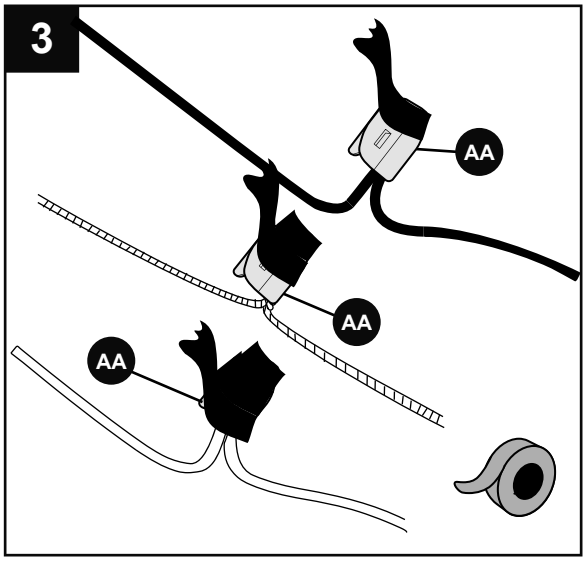

Hardware Used

AA	Lever Wire Connector	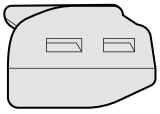	x 3

WIRING

4. Gently slide remote control receiver (P) flat-side up into mounting bracket (A). Turn spliced/taped wires upward and gently push wires and wire connectors into outlet box. Let antenna from remote control receiver (P) hang to the side.

   NOTE: The remote control included with this fan meets the following requirements:

   a. Not for use with solid state fans.

   b. Electrical rating: 120V / 60 Hz;
   Motor and LED wattage: 60W MAX.

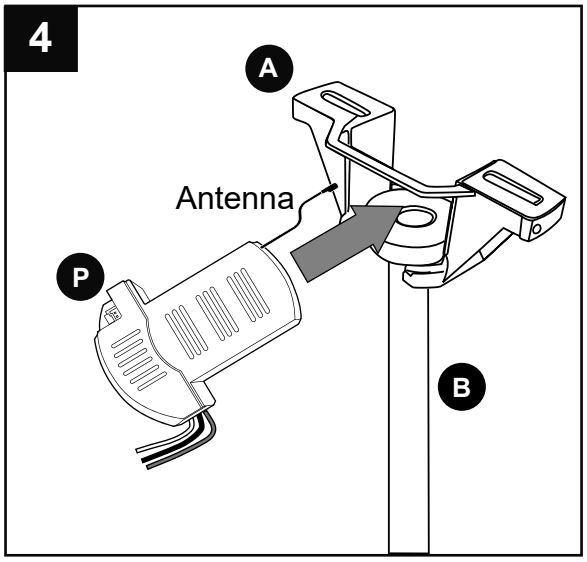

FINAL INSTALLATION

1. Locate two canopy mounting screws (I) on underside of mounting bracket (A) and remove canopy mounting screw (I) closest to the open end of the mounting bracket (A). Partially loosen the other canopy mounting screw (I). Lift canopy (E) to mounting bracket (A). Place rounded part of slotted hole in canopy (E) over loosened canopy mounting screw (I) and push up. Twist canopy (E) to lock. Re-insert canopy mounting screw (I) that was removed, then tighten both canopy mounting screws (I).

   Slide canopy cover (J) up to canopy (E), aligning knobs on canopy cover (J) with openings in bottom of canopy (E). Press up gently but firmly on canopy cover (J) until it fits into the bottom of the canopy (E) and then turn canopy cover (J) about 1/2 in.

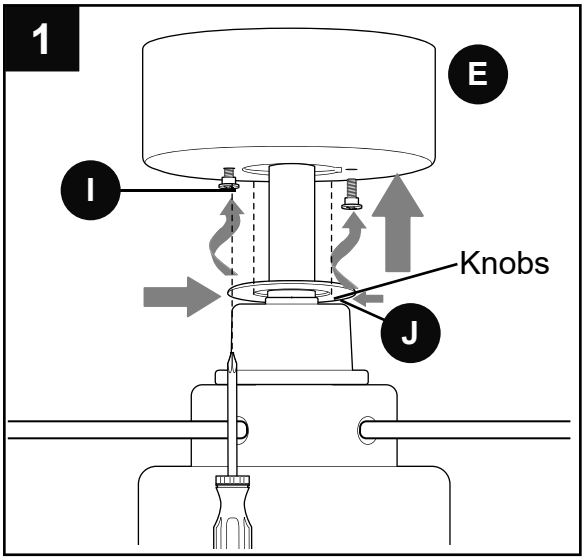

FINAL INSTALLATION

2. ⚠ **DANGER**: To reduce the risk of serious bodily injury, DO NOT use power tools to assemble the blades (G). If screws are overtightened, blades (G) may crack and break.

   Noting the THIS SIDE UP label on blade (G), align holes in blade (G) and blade plate (M) with holes on the bottom of motor housing (F) *as shown*. Partially insert three blade screws/lock washers (BB) to attach blade (G) and blade plate (M) to motor housing (F). Tighten blade screws/lock washers (BB) securely. Repeat Step 2 for remaining blades (G).

   NOTE: Make sure to completely secure each blade (G) before proceeding to the next.

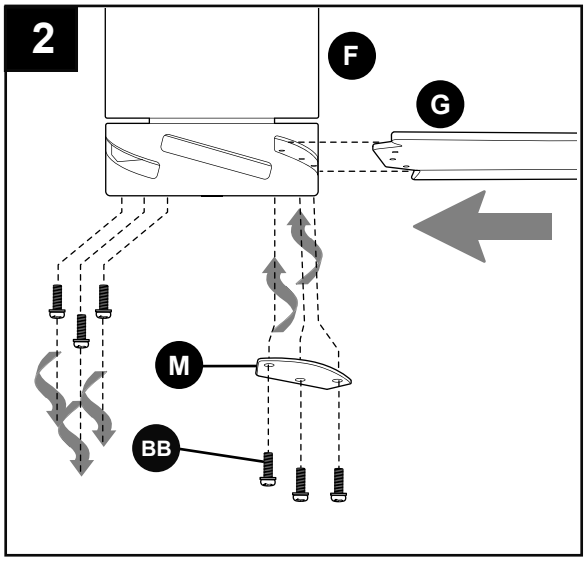

Hardware Used

BB Blade Screw/Lock washer 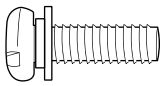 x 18

3. Remove one motor plate screw (L) from motor plate on underside of motor housing (F) and partially loosen the other two motor plate screws (L). Align slotted holes in fitter plate (K) with loosened motor plate screws (L). Twist fitter plate (K) to lock. Re-insert the motor plate screw (L) that was removed and securely tighten all three motor plate screws (L).

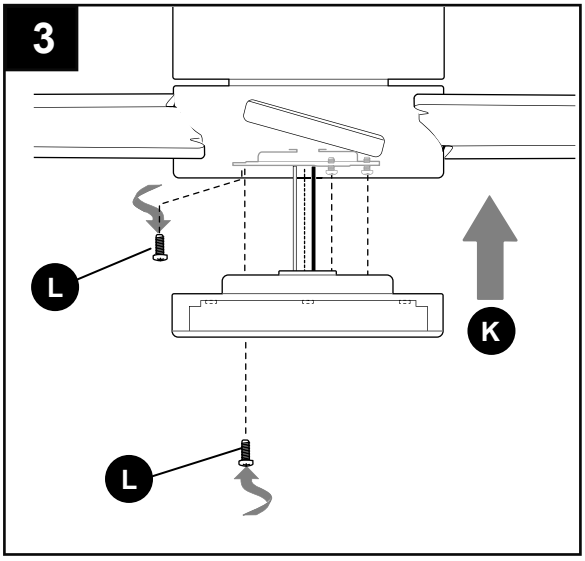

FINAL INSTALLATION

4. Align slots on metal cover (Q) with protrusions on inside of fitter plate (K). Turn metal cover (Q) clockwise until it no longer turns.
   NOTE: Pull down gently on metal cover (Q) to make sure it is secured completely.

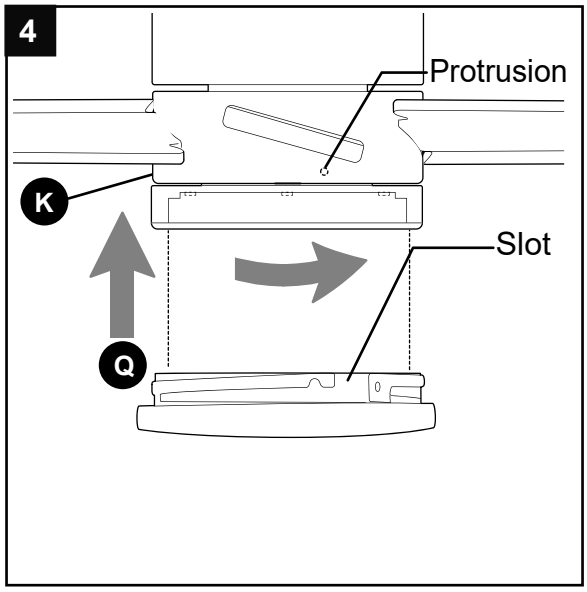

OPERATING INSTRUCTIONS

⚠ **CAUTION:** The remote control transmitter can be programmed to multiple receivers or fans. If this is not desired, turn wall switch off to any other programmable receiver or fan.

FCC Compliance Notice for Remote Control and LED Light Kit

⚠ **CAUTION:** Changes or modifications not approved by the party responsible for compliance could void the user's authority to operate the equipment.

This device complies with Part 15 of the FCC Rules. Operation is subject to the following two conditions: (1) this device may not cause harmful interference, (2) this device must accept any interference received, including interference that may cause undesired operation.

NOTE: This equipment has been tested and found to comply with the limits for a Class B digital device, pursuant to Part 15 of the FCC Rules. These limits are designed to provide reasonable protection against harmful interference in a residential installation. This equipment generates, uses and can radiate radio frequency energy and, if not installed and used in accordance with the instructions, may cause harmful interference to radio communications. However, there is no guarantee that interference will not occur in a particular installation. If this equipment does cause harmful interference to radio or television reception, which can be determined by turning the equipment off and on, the user is encouraged to try to correct the interference by one or more of the following measures:

* Reorient or relocate the receiving antenna.
* Increase the separation between the equipment and receiver.
* Connect the equipment into an outlet on a circuit different from that to which the receiver is connected.

Consult the dealer or an experienced radio/TV technician for help.

Distributed by: Litex Industries Inc., P.O. Box 535639, Grand Prairie, TX, 75053; 800-527-1292

OPERATING INSTRUCTIONS

1. Locate remote control transmitter in remote pack (O). Remove battery cover. Install two AAA batteries from remote pack (O). Observe diagram inside battery compartment to install batteries correctly.

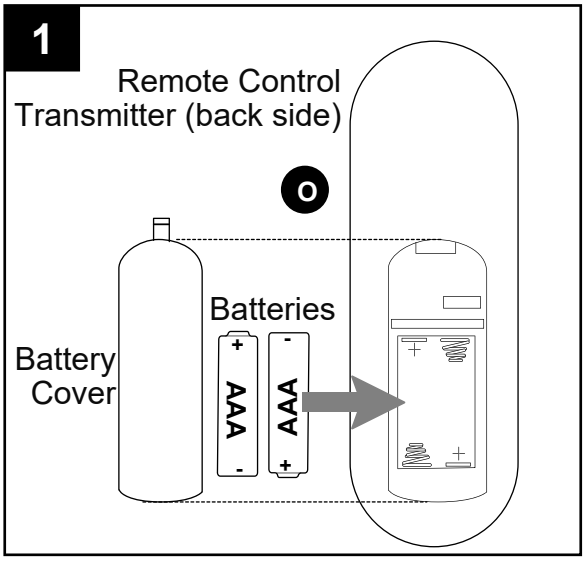

⚠ WARNING: Batteries are to be inserted with correct polarity.

⚠ WARNING: ***Choking/Ingestion Hazard*** - Small parts. Keep batteries away from children.

NOTE: DO NOT mix old and new batteries; DO NOT mix alkaline, standard (carbon - zinc) or rechargeable (nickel - cadmium) batteries or equivalent.

NOTE: Batteries are NOT rechargeable. Remove batteries with low or no charge and dispose of them properly.

⚠ CAUTION: "DO NOT DISPOSE OF BATTERIES IN FIRE, BATTERIES MAY EXPLODE OR LEAK." - When disposing of household alkaline batteries, it is best to check with your local and state recycling or household hazardous waste coordinators concerning the specifics of the program in your area. You may also locate a recycling center by calling 1-800-8-BATTERY or 1-877-2-RECYCLE or visit www.epa.gov/epawaste/index.htm or www.earth911.org for more information.

2. Replace battery cover on remote control transmitter.

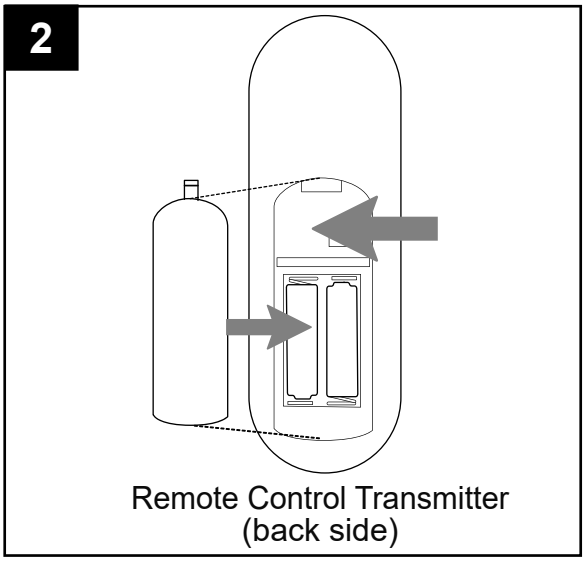

Restore electrical power.
IMPORTANT: To prevent damage to remote control transmitter, remove the batteries if not used for long periods. Store the remote control transmitter away from excess heat or humidity.

NOTE: If fan and/or remote control fail(s) to operate or you have purchased a new remote control transmitter, make sure to turn the power off first. Restore electrical power. Within 30 seconds of restoring electrical power, press and hold the OFF button (⏻) on the remote control transmitter (refer to Step 3 on the following page) for 5 seconds or until fan beeps. Use the remote control transmitter to test the light and fan functions to confirm the learning process is complete.

OPERATING INSTRUCTIONS

3. Operation buttons on the front panel of the remote control transmitter:
   - 1 - Reverse function ─ fan must be set on low before reversing blade direction
   - 2 - Fan speeds: **1** (lowest) to **6** (highest) and to turn fan ON
   - 3 - **OFF** power button for fan and learning function
   - 4 - Timer mode: fan may be set to run for
     – 1 hour / 4 hours / 8 hours
   - 5 - Dimmer mode: press and hold to dim light
   - 6 - **ON** / **OFF**, power button for light
   - 7 - Color mode: change/select light color
     – soft white
     – warm white
     – cool white
     – daylight
     – cool daylight
   - 8 - Breeze mode: fan automatically cycles between all 6 different speeds
   - 9 - Vacation mode: light kit switches on for 5 minutes every 2 hours

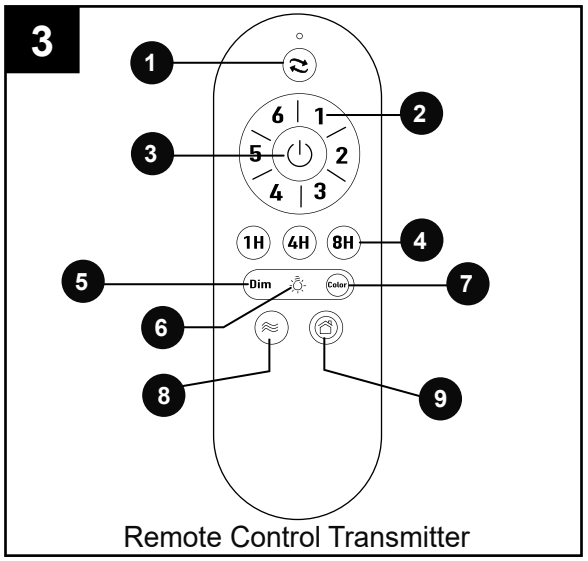

Remote Control Transmitter

CARE AND MAINTENANCE

At least twice each year, lower canopy to check downrod assembly, and then tighten all screws on fan. Clean motor housing with only a soft brush or lint-free cloth to avoid scratching the finish. Clean blades with a lint-free cloth. You may occasionally apply a light coat of furniture polish to wood blades for added protection.

IMPORTANT: Shut off main power supply before beginning any maintenance. Do not use water or a damp cloth to clean the ceiling fan.

Total wattage for this LED is 30 watts; do not attempt to replace the LEDs.

TROUBLESHOOTING

⚠ **WARNING:** Before beginning work, shut off the power supply to avoid electrical shock.

PROBLEM	POSSIBLE CAUSE	CORRECTIVE ACTION
Fan does not move.	1. Power is off or fuse is blown. 2. Faulty wire connection. 3. Blades are not installed.	1. Turn power on or check fuse. 2. Turn power off. Loosen canopy and check all connections. 3. Install all blades (see page 15).
Noisy operation.	1. Blades are loose. 2. Cracked blade. 3. Fan is new.	1. Tighten all blade screws. 2. Replace blade. 3. Allow fan a “break in” period of a few days, especially when running the fan at Medium and High speeds.
Excessive wobbling.	1. Blades are loose. 2. Blade plates incorrectly attached. 3. Unbalanced blades. 4. Fan not securely mounted. 5. Fan too close to vaulted ceiling. 6. Set screw(s) on motor housing yoke is (are) not tightened properly. 7. Set screw on hanging ball is not tightened properly.	1. Tighten all blade screws. 2. Re-install blade plates. 3. Switch one blade with a blade from the opposite side. 4. Turn power off. Carefully loosen canopy and verify that mounting bracket is secure. 5. Use a longer downrod or move fan to another location. 6. Tighten yoke set screw(s) securely. 7. Carefully loosen and lower canopy and verify that set screw on hanging ball is tightened securely.
Fan operates but light fails.	1. Wires in canopy not wired properly. 2. Wall switch to fan is off.	1. Check wires in canopy and, if necessary, re-wire according to instructions on page 13. 2. Make sure wall switch to fan is on.
Remote control fails to operate.	1. Remote control transmitter not synced with fan. 2. Batteries not installed correctly. 3. Battery/Batteries no longer working.	1. Refer to instructions in Step 2 on page 17. 2. Check that batteries have been installed with correct polarity. 3. Replace both batteries according to instructions on page 17.

NOTE: A small amount of "wobble" is normal and should not be considered a defect.

LIMITED LIFETIME WARRANTY

Set forth below, the manufacturer warrants the fan motor for this ceiling fan to be free from defects in workmanship and material for the life of the product. Also, subject to the limitations below, the manufacturer warrants all ceiling fan parts (“ceiling fan parts” excludes the motor and parts made in whole or in part with glass) to be free from defects in workmanship and material for a period of one year after the date of purchase by the original purchaser at retail.

All claims must be made by the original purchaser, whether such purchaser purchased the product through a store or contractor. Ceiling fan part defects must be reported within the first year from the date of purchase. Parts made in whole or in part with glass and the finishes of metal and other surfaces are not warranted.

Purchasers are responsible for all costs of removing and reinstalling the product. Any damage to any part caused by ordinary wear and tear, accident, misuse, or improper installation, is not covered by this warranty. The manufacturer assumes no responsibility whatsoever for fan installation. Any service performed by a non-licensed electrician will render the warranty invalid.

The manufacturer’s sole responsibility shall be to repair or replace the motor, parts, or product within the terms stated above. The manufacturer shall not be liable for any loss or damage of any kind, including any incidental or consequential damages resulting directly or indirectly, from any breach of warranty, express or implied, or any other failure of this product. Some states do not allow the exclusion or limitation of incidental or consequential damages so this limitation may not apply to you.
If the original purchaser ceases to own the fan, this warranty is voided.

Should the purchaser encounter a problem with your fan related to defects in workmanship or materials within the warranty period associated with the defective part, the manufacturer agrees to replace the defective part without charge, or at its option, to replace the ceiling fan with a comparable or superior model.

The manufacturer’s warranties are limited to the written warranties set out in this ceiling fan limited lifetime warranty. All other express and implied warranties, including, without limitation, the implied warranty of fitness for a particular purpose and the implied warranty of merchantability are disclaimed. Some states do not allow the disclaimer of implied warranties, so this disclaimer may not apply to you.

REPLACEMENT PARTS LIST

All parts are replaceable (see parts list in “Package Contents” on Page 5), however, only the parts listed below are under warranty. For replacement parts, call our customer service department at **888-251-1003**, 8 a.m. - 8 p.m., EST, Monday - Sunday. You could also contact us at **ascs@lowes.com**.

PART	DESCRIPTION	PART #
A	Mounting Bracket	6030895-A
B	Downrod	6030895-B
E	Canopy	6030895-E
G	Blade	6030895-G

