ASSEMBLY INSTRUCTIONS

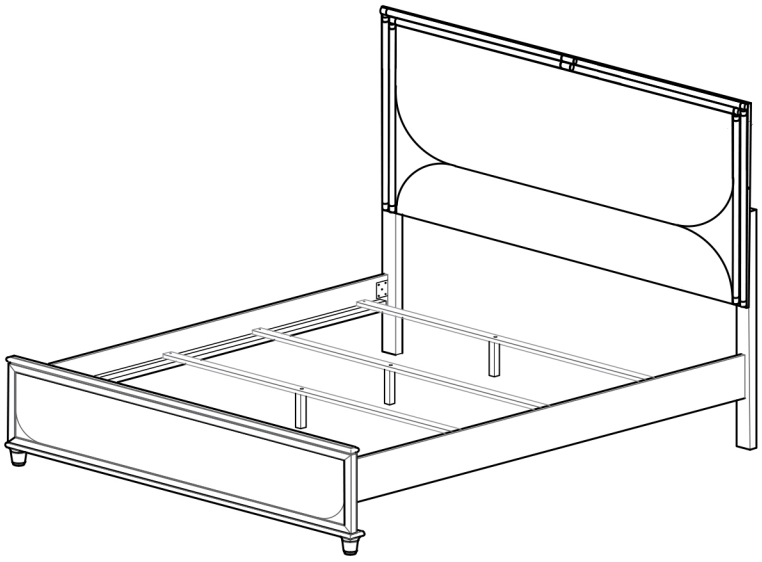

TOOLS REQUIRED



Allen Wrench

(Included)



Screwdriver

(Not Included)



2 - Persons Recommended

ASSEMBLY RATING

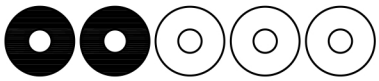

EASY ——→ DIFFICULT

The Assembly Rating is a 5-point system showing the level of effort needed to assemble a specific product.

VERSION # 24-07-17

CHECK BEFORE STARTING

- [ ] **Are you missing anything?**

  Double-check all parts, hardware and accessories listed are all acccounted for.

- [ ] **Should we send any replacements?**

  Are there any irregularities or flaws in the parts? We can send replacements!

- [ ] **Check out our Quick Tips!**

  We recommend reviewing the pre-assembly handouts. Even experts need a refresher now and then!

- [ ] **Prep Time!**

  Please review the assembly instructions and all diagrams prior to assembling.

PRE ASSEMBLY INTRODUCTION

We understand building ready-to-assemble furniture can be a challenging experience for some. To help avoid confusion, we have provided some helpful tips that may speed up the process.



Teamwork

ALWAYS have at least two people to help with transporting and assembling the product to avoid potential injury and/or damage.



Suitable Location

Assembling near the area of the intended location is highly recommended.



Sufficient Space

Make sure you have enough space to move around during the assembly.



Avoid Scratches

Use cardboard, blankets or a carpeted area while assembling furniture to prevent scratches and damages.

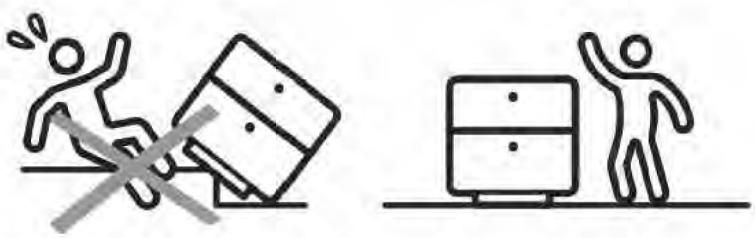

Flat Surface

Make sure the furniture rests on a flat and level surface with each leg evenly touching the floor.

ASSEMBLY AND CARE ADVICE

FAILURE TO FOLLOW THE GUIDELINES BELOW MAY RESULT IN INJURY AND/OR PROPERTY DAMAGE.



Position each part correctly and insert screws or bolts into their respective holes.



Turn clockwise to tighten and only tighten when step is completed or when instructed to do so.



Use the appropriate hand tools or power tools for assembly. Select steps, such as tightening screws and/or bolts, may require hand tools to avoid causing damage during assembly.



Save the instructions and store any supplied tools for later maintenance.



After two weeks, check and tighten any loose hardware and repeat again every six months thereafter.

IT IS THE USER'S RESPONSIBILITY TO MAINTAIN THE FURNITURE. THE HARDWARE MAY LOOSEN OVER TIME AND MAY CAUSE THE FURNITURE TO BE WOBBLY AND UNABLE TO SUPPORT ITS INTENDED WEIGHT CAPACITY. THIS MAY LEAD TO COLLAPSE AND MAY CAUSE SERIOUS INJURY.

QUEEN BED

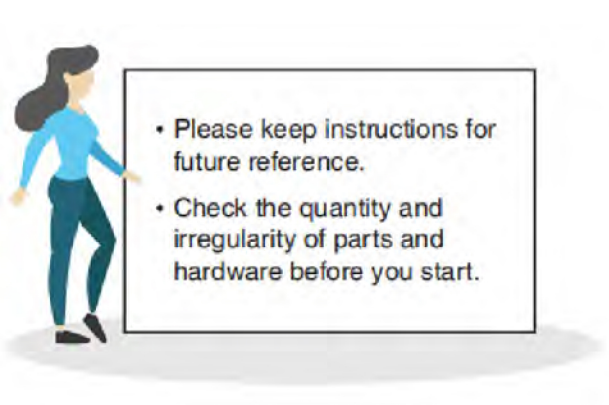

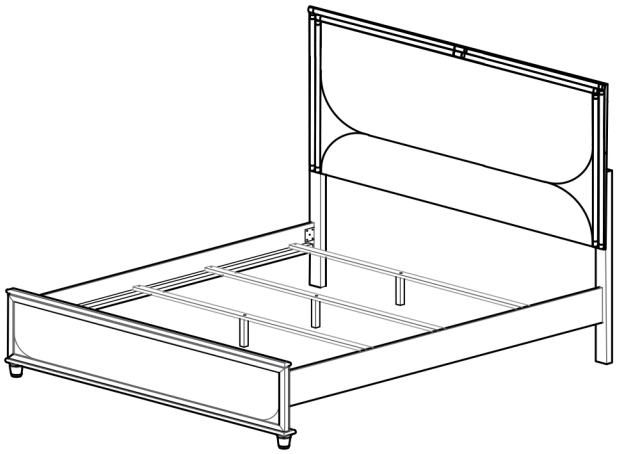

PARTS

PART LIST OF HEADBOARD

(1) 1pc

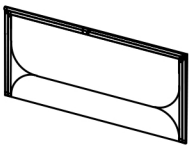

Headboard

(2) 1pc

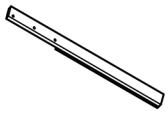

Headboard Leg - (R)

(3) 1pc

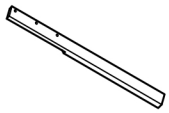

Headboard Leg - (L)

PART LIST OF FOOTBOARD

(4) 1pc

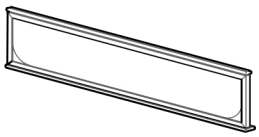

Footboard

(5) 2pcs



Acrylic Leg

(6) 4pcs

Slat

(7) 4pcs



Slat Support Leg
190mm x 30mm x 30mm

PART LIST OF SIDE RAIL

(8) 2pcs



Side Rail

HARDWARE

HARDWARE PACK IN HEADBOARD

A 1pc	B 6pcs	C 6pcs	D 6pcs	E 1pc
				
Allen Key	JCBC M6 x 35mm	M6 Spring Washer	M6 Flat Washer	AC Adapter

HARDWARE PACK IN FOOTBOARD

F 1pc	G 4pcs	H 4pcs	I 8pcs	J 4pcs
			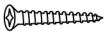	
Allen Key	JCBC M6 x 35mm	M6 Spring Washer	Screw 32mm	Adjustable Leveller

POINT 3 CARTONS

Carton	Designation	Part		Hardware
	Headboard (1pc)	1	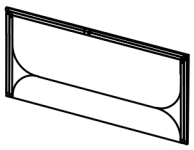	 A x 1pc  B x 6pcs  C x 6pcs  D x 6pcs  E x 1pc
	Headboard Leg - (R) (1pc)	2	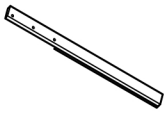	
	Headboard Leg - (L) (1pc)	3	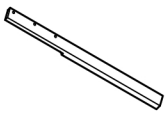	
	Footboard (1pc)	4	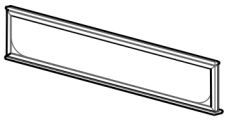	 F x 1pc  G x 4pcs  H x 4pcs 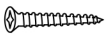 I x 8pcs  J x 4pcs
	Acrylic Leg (2pcs)	5		
	Slat (4pcs)	6	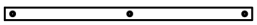	
	Slat Support Leg (4pcs)	7		
	Side Rail (2pcs)	8		

ASSEMBLY INSTRUCTIONS

1

Part (1) x 1pc

Part (2) x 1pc

Part (3) x 1pc

Hardware (A) x 1pc

Hardware (B) x 6pcs

Hardware (C) x 6pcs

Hardware (D) x 6pcs

Hardware (E) x 1pc

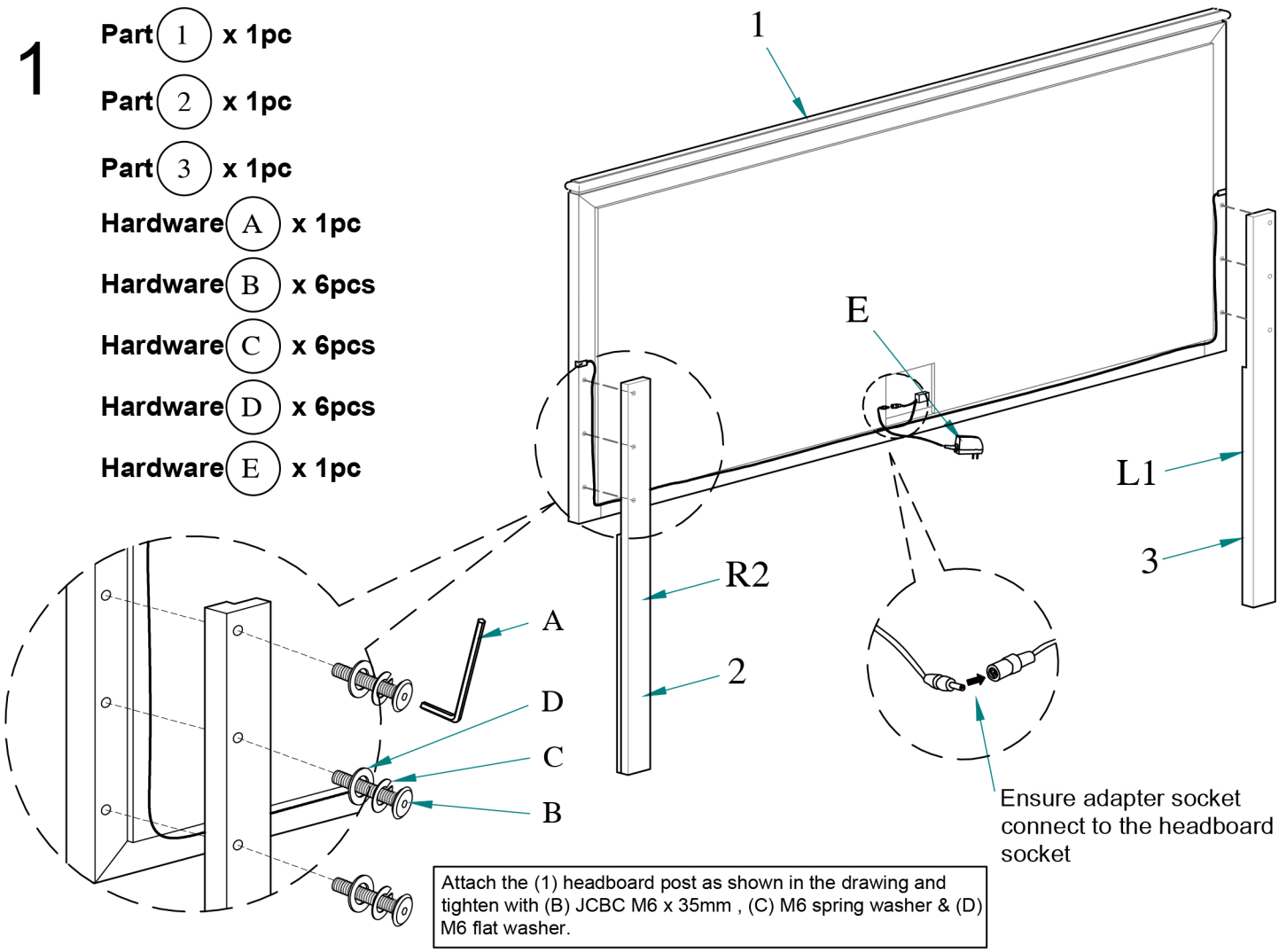

Ensure adapter socket connect to the headboard socket

Attach the (1) headboard post as shown in the drawing and tighten with (B) JCBC M6 x 35mm , (C) M6 spring washer & (D) M6 flat washer.

2

Part (1) x 1pc

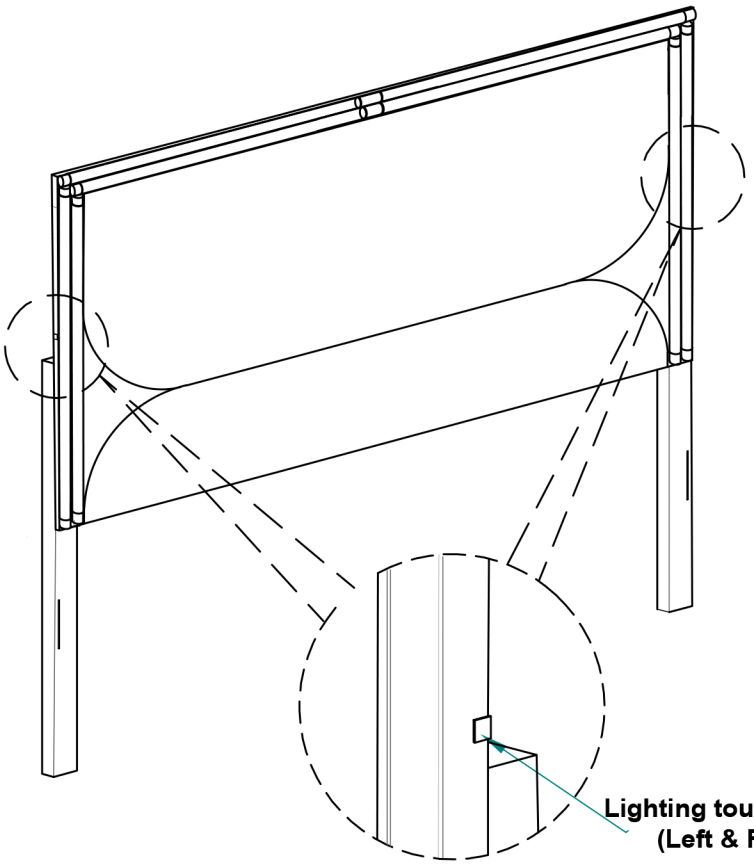

Lighting touch switch (Left & Right)

3

Part (4) **x 1pc**

Part (5) **x 2pcs**

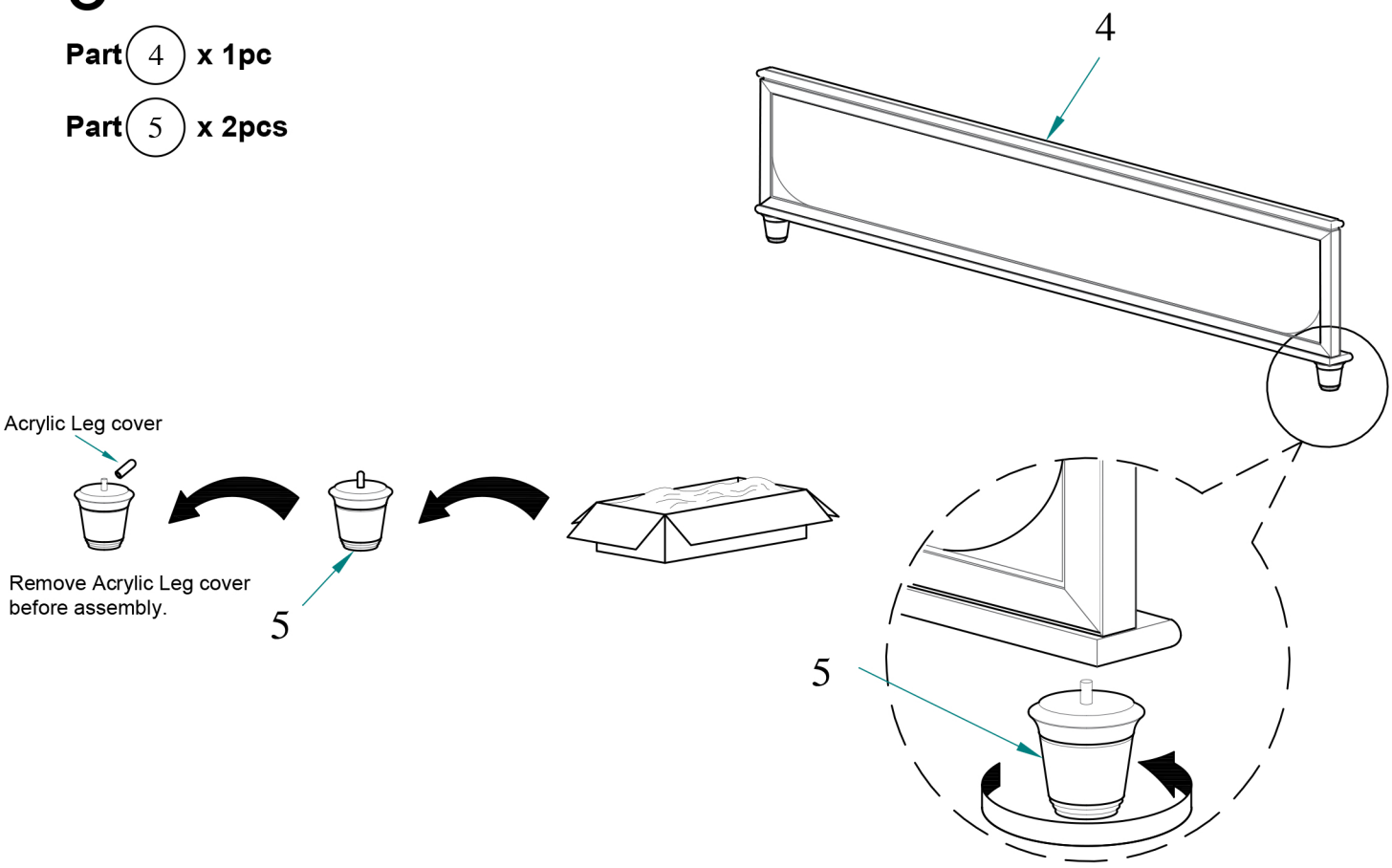

4

Attach the (8) Side Rail to the (1) Headboard & (4) Footboard.

Part (1) **x 1pc**

Part (4) **x 1pc**

Part (8) **x 2pcs**

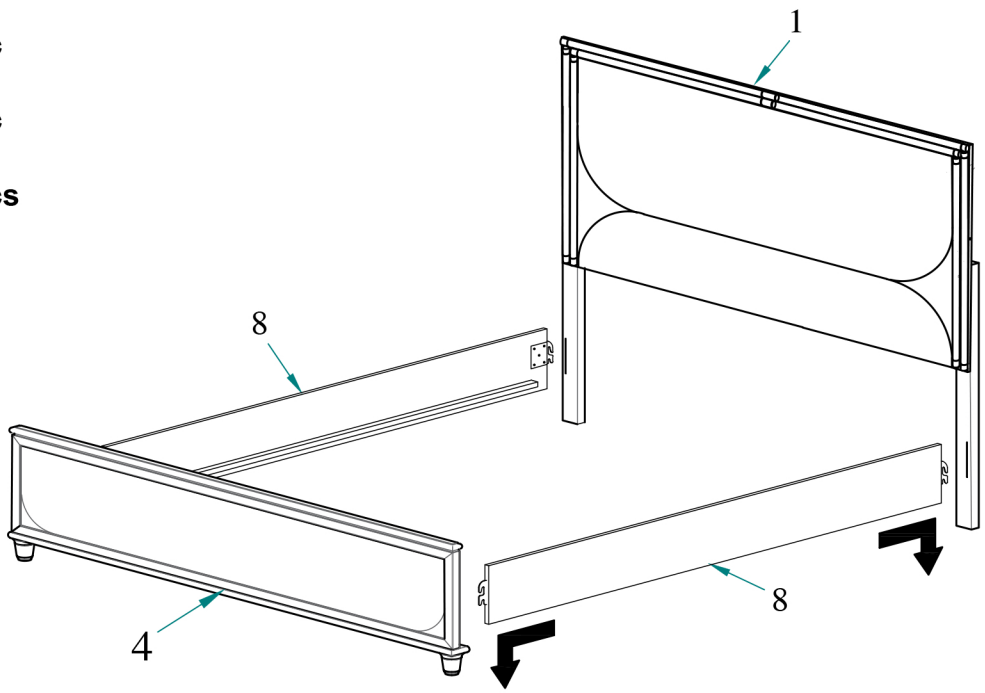

5

Part (6) **x 4pcs**
Part (7) **x 4pcs**
Part (8) **x 2pcs**

Hardware (F) **x 1pc**
Hardware (G) **x 8pcs**
Hardware (H) **x 8pcs**
Hardware (I) **x 8pcs**
Hardware (J) **x 8pcs**

Attach (7) Slat Support Leg to the bottom of (6) Slat using (G) JCBC M6 x 35mm & (H) M6 Spring Washer. Attach the (J) Adjustable Leveler and adjust it to level the bed with the floor.

Secure the (6) Slat using the (I) screw 32mm provided.

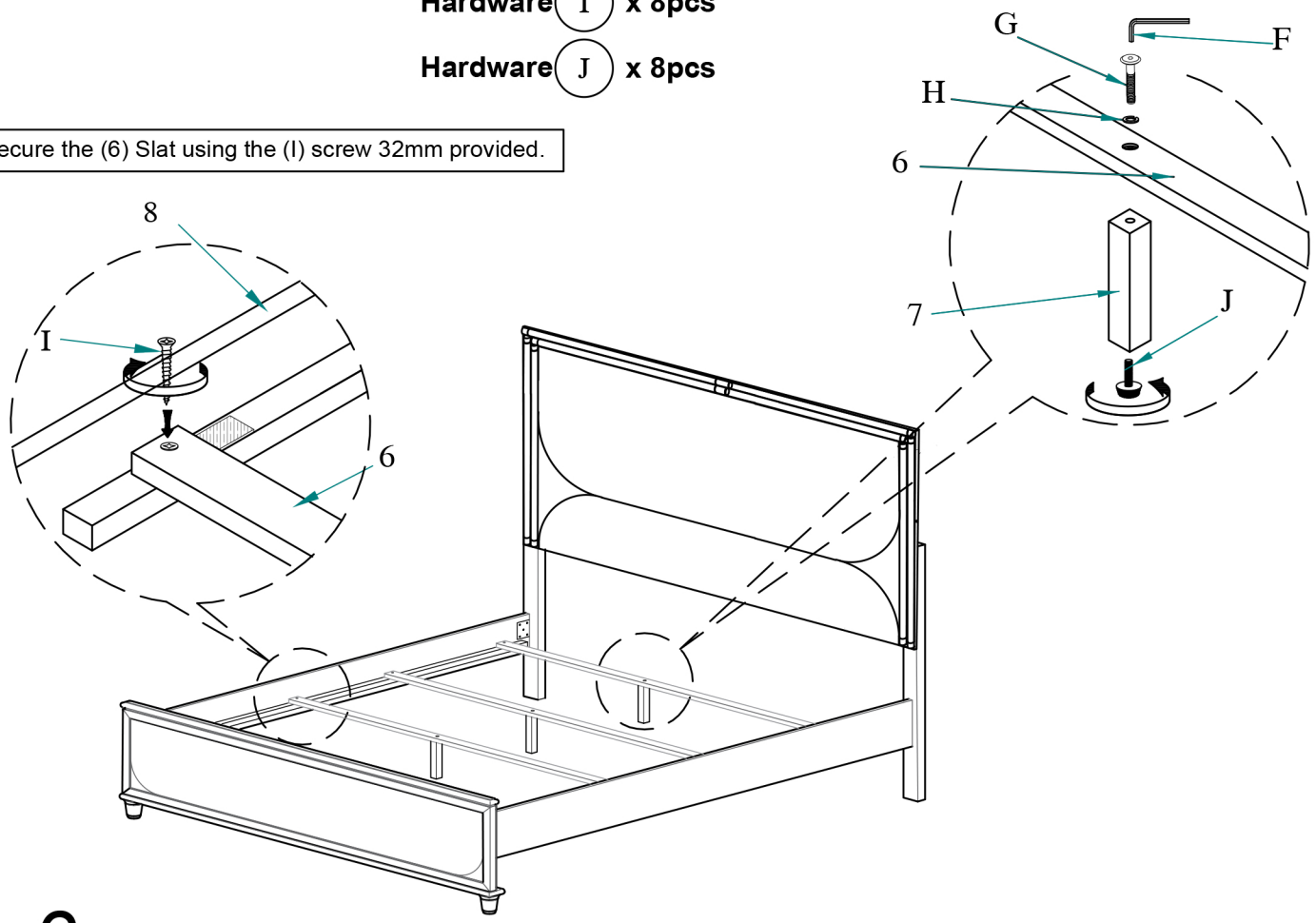

6

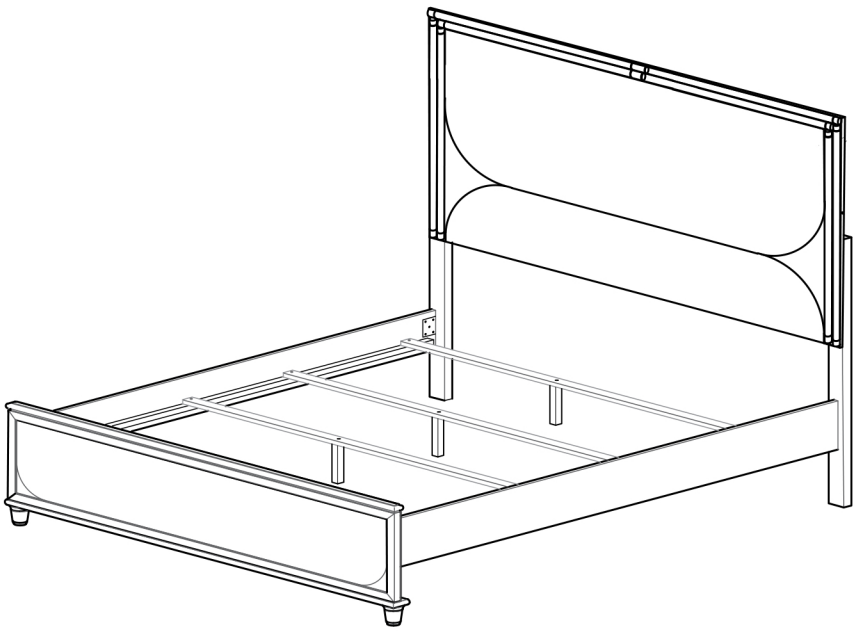

ASSEMBLY COMPLETED

Please ensure the furniture rests on an even and flat surface. If the product wobbles or feels loose, double-check all bolts and/or screws are properly tightened and secured.

Keep this handy!
Please relain this instruction manual and any order-related information for future reference.

Lift,don't drag!
To avoid damage to product please always LIFT the product when transporting of adjusting the placement.

This product is intended for RESIDENTIAL USE ONLY and not for commercial use.

ASSEMBLY INSTRUCTIONS

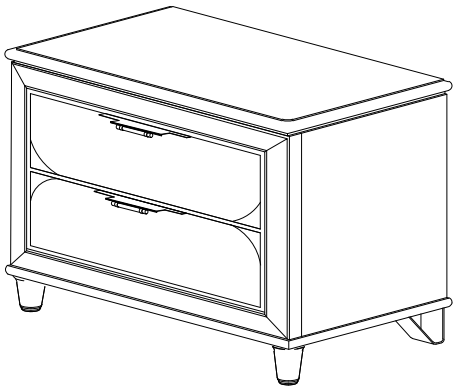

TOOLS REQUIRED



Allen Wrench

(Included)



Screwdriver

(Not Included)



2 - Persons Recommended

ASSEMBLY RATING

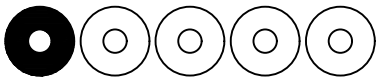

EASY ——→ DIFFICULT

The Assembly Rating is a 5-point system showing the level of effort needed to assemble a specific product.

VERSION # 24-07-17

CHECK BEFORE STARTING

- [ ] **Are you missing anything?**

  Double-check all parts, hardware and accessories listed are all acccounted for.

- [ ] **Should we send any replacements?**

  Are there any irregularities or flaws in the parts? We can send replacements!

- [ ] **Check out our Quick Tips!**

  We recommend reviewing the pre-assembly handouts. Even experts need a refresher now and then!

- [ ] **Prep Time!**

  Please review the assembly instructions and all diagrams prior to assembling.

PRE ASSEMBLY INTRODUCTION

We understand building ready-to-assemble furniture can be a challenging experience for some. To help avoid confusion, we have provided some helpful tips that may speed up the process.



Teamwork

ALWAYS have at least two people to help with transporting and assembling the product to avoid potential injury and/or damage.



Suitable Location

Assembling near the area of the intended location is highly recommended.



Sufficient Space

Make sure you have enough space to move around during the assembly.



Avoid Scratches

Use cardboard, blankets or a carpeted area while assembling furniture to prevent scratches and damages.

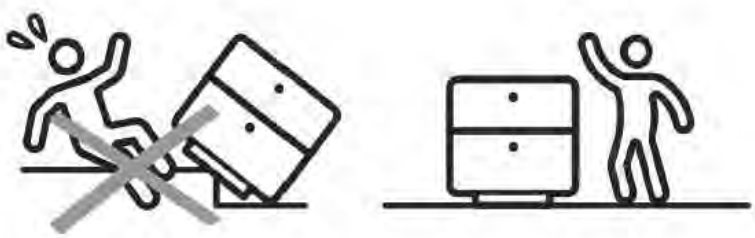

Flat Surface

Make sure the furniture rests on a flat and level surface with each leg evenly touching the floor.

ASSEMBLY AND CARE ADVICE

FAILURE TO FOLLOW THE GUIDELINES BELOW MAY RESULT IN INJURY AND/OR PROPERTY DAMAGE.



Position each part correctly and insert screws or bolts into their respective holes.



Turn clockwise to tighten and only tighten when step is completed or when instructed to do so.



Use the appropriate hand tools or power tools for assembly. Select steps, such as tightening screws and/or bolts, may require hand tools to avoid causing damage during assembly.



Save the instructions and store any supplied tools for later maintenance.



After two weeks, check and tighten any loose hardware and repeat again every six months thereafter.

IT IS THE USER'S RESPONSIBILITY TO MAINTAIN THE FURNITURE. THE HARDWARE MAY LOOSEN OVER TIME AND MAY CAUSE THE FURNITURE TO BE WOBBLY AND UNABLE TO SUPPORT ITS INTENDED WEIGHT CAPACITY. THIS MAY LEAD TO COLLAPSE AND MAY CAUSE SERIOUS INJURY.

NIGHTSTAND

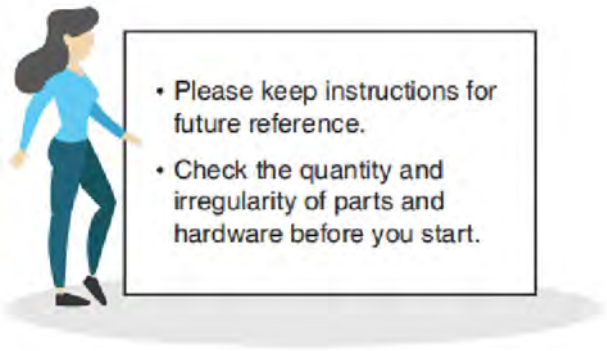

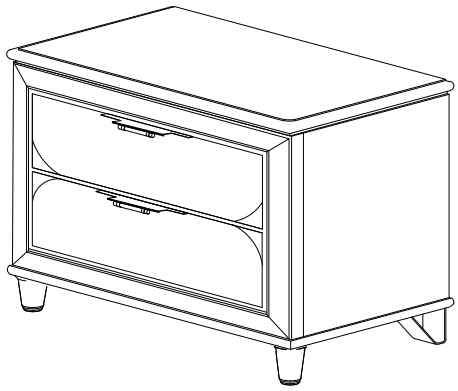

PARTS

1 1pc

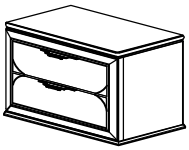

NightStand

2 2pcs



Acrylic Leg

3 2pcs



Metal Leg

HARDWARE

A 1pc



Allen Key

B 4pcs



JCBC M6 x 20mm

C 4pcs



M6 Spring Washer

D 4pcs



M6 Flat Washer

E 1pc



Anti-tipping Restraint Kit

ASSEMBLY INSTRUCTIONS

1

Part (1) x 1pc

Part (2) x 2pcs

Part (3) x 2pcs

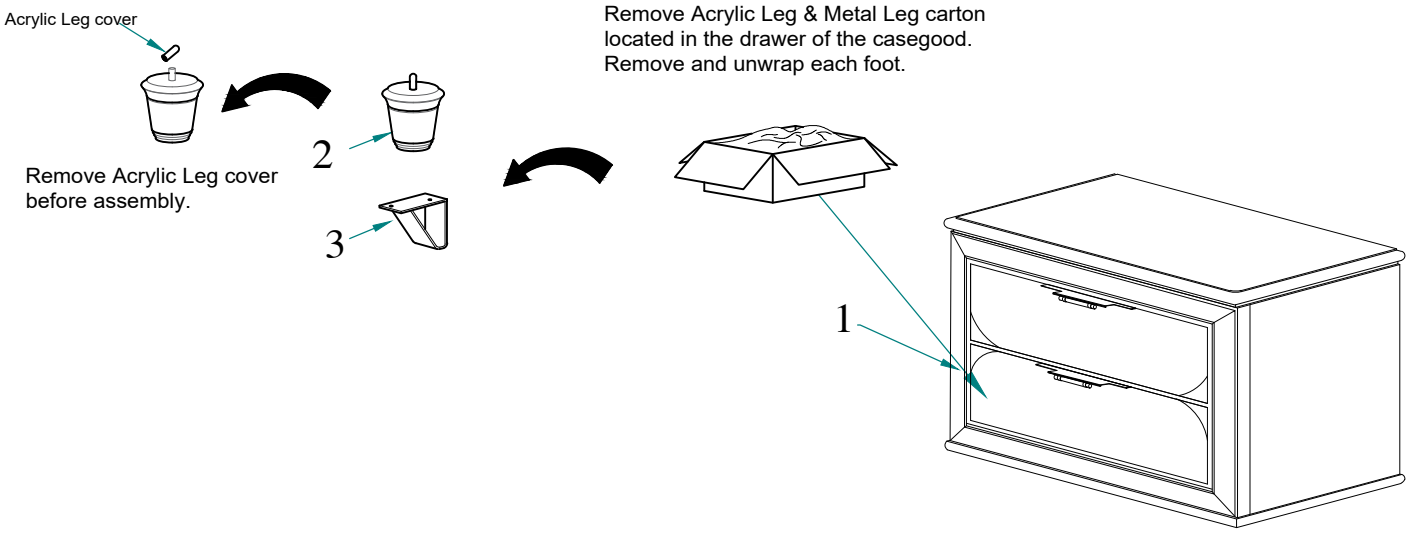

2

Secure the (2) Acrylic Leg to the bottom of (1) Nightstand as a diagram shown.

Part (1) x 1pc

Part (2) x 2pcs

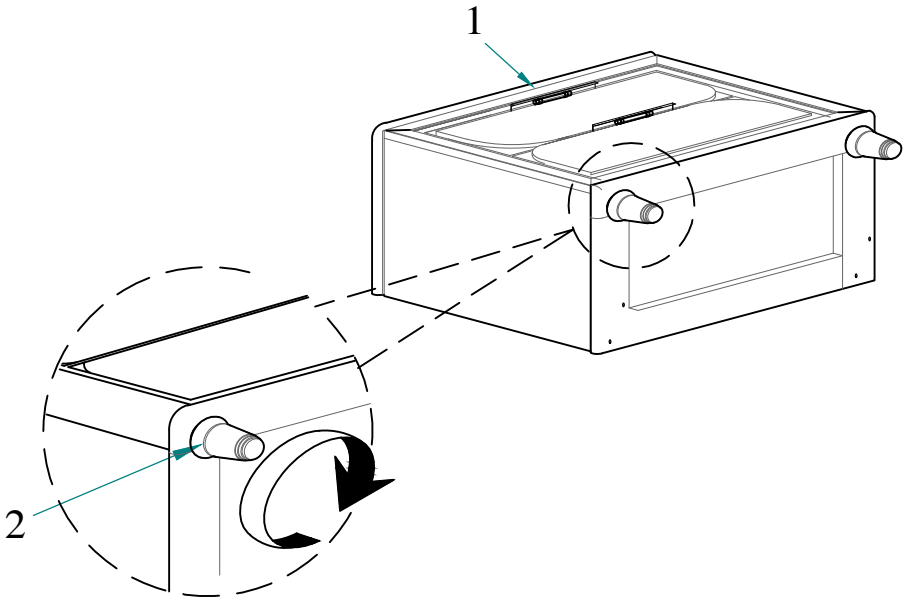

3

Secure the (3) Metal Leg to the bottom of (1)Nightstand tighten using (B) JCBC M6 x 20mm,(C) M6 Spring Washer &(D) M6 Flat Washer as a diagram shown.

Part (1) **x 1pc**

Part (3) **x 2pcs**

Hardware (A) **x 1pc**

Hardware (B) **x 4pcs**

Hardware (C) **x 4pcs**

Hardware (D) **x 4pcs**

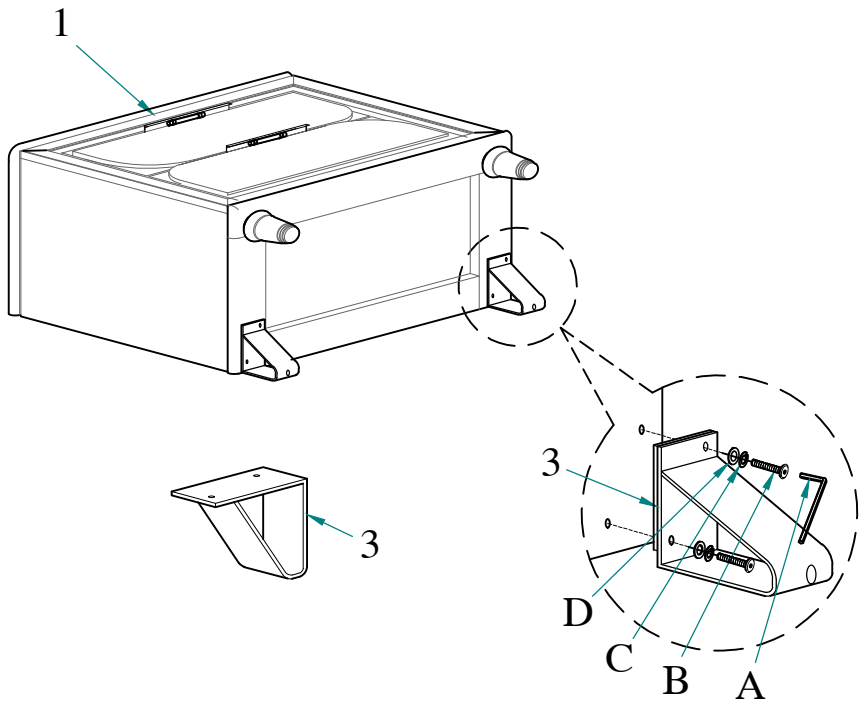

4

Part (1) **x 1pc**

Hardware (F) **x 1pc**

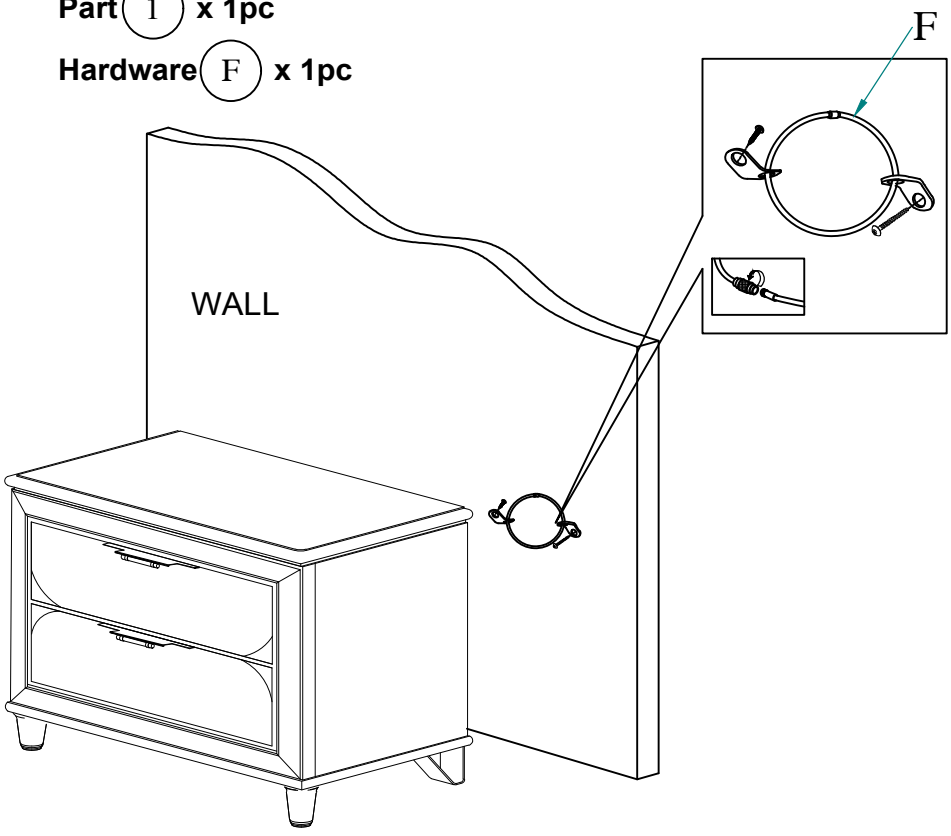

ASSEMBLY COMPLETED

Please ensure the furniture rests on an even and flat surface. If the product wobbles or feels loose, double-check all bolts and/or screws are properly tightened and secured.

Keep this handy!
Please relain this instruction manual and any order-related information for future reference.

Lift,don't drag!
To avoid damage to product please always LIFT the product when transporting of adjusting the placement.

This product is intended for RESIDENTIAL USE ONLY and not for commercial use.