OD26005KD-55

INSTALLATION GUIDE

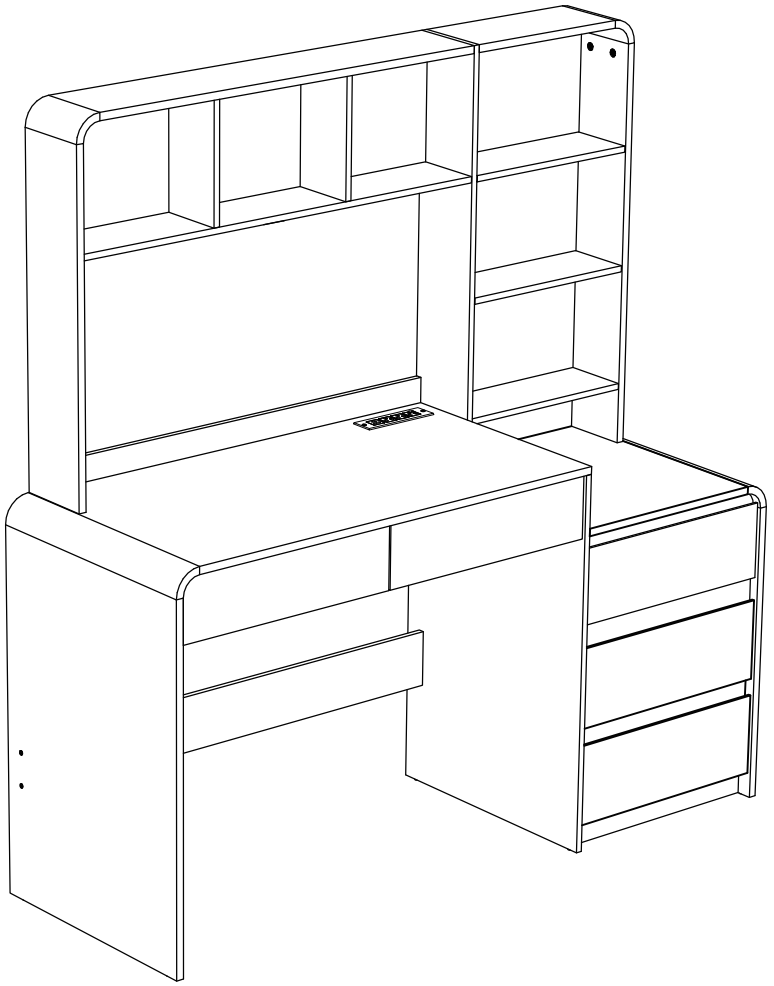

Computer Desk With Hutch

Note:Before installation,please spread a soft mat or the foam inside the package on the ground to prevent damage

1 PRECAUTIONS

READ BEFORE BEGINNING ASSEMBYLY

1.Assemble the unit in a roomy workspace,ideally near the intended location of use,and on carpeting or a cardboard mat to pr event damage to your flooring and the product.Ensure that all included parts are accounted for.

2.Carefully review each step of the assembly process.It is imperative that the instructions are followed in the precise order provided.Deviation from the sequence may lead to assembly challenges.

3.Be advised that this product includes small parts.Please keep them out of the reach of young children to prevent any potential hazards.

4.This product is intended for residential use only and is not suitable for commercial applications.

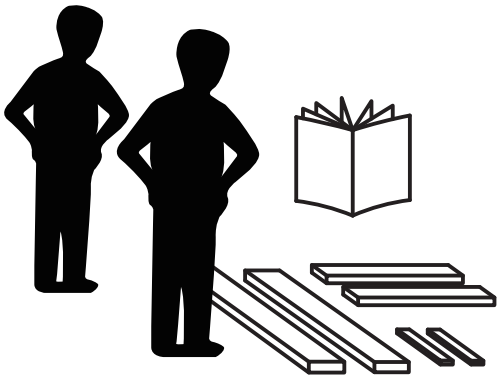

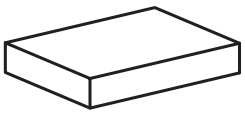

This product is packaged in
1 Carton

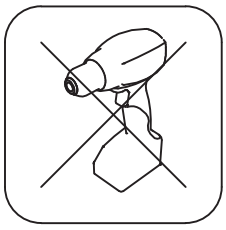

Do Not use Power tools

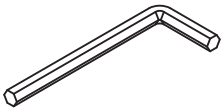

Allen key-Included

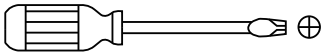

Phillips screwdriver-not include

2 PACKAGE CONTENTS

Part Nr.	Qty	Part Nr.	Qty	Part Nr.	Qty	Part Nr.	Qty	Part Nr.	Qty
1	1pc	2	1pc	3	1pc	4	1pc	5	1pc
6	2pcs	7	1pc	8	1pc	9	1pc	10	1pc
11	1pc	12	1pc	13	1pc	14	2pcs	15	1pc
16	1pc	17	1pc	18	1pc	19	1pc	20	1pc
21	1pc	22	1pc	23	1pc	24	1pc	25	2pcs
26	1pc	27	2pcs	28	1pc	29	2pcs	30	1pc
31	1pc	32	1pc	33	1pc	34	1pc	35	1pc
36	3pcs	37	3pcs	38	2pcs	39	1pc	40	1pc
41	1pc	42	1pc	43	1pc	44	1pc	45	1pc
46	2pcs	47	1pc	48	1pc	49	2pcs		

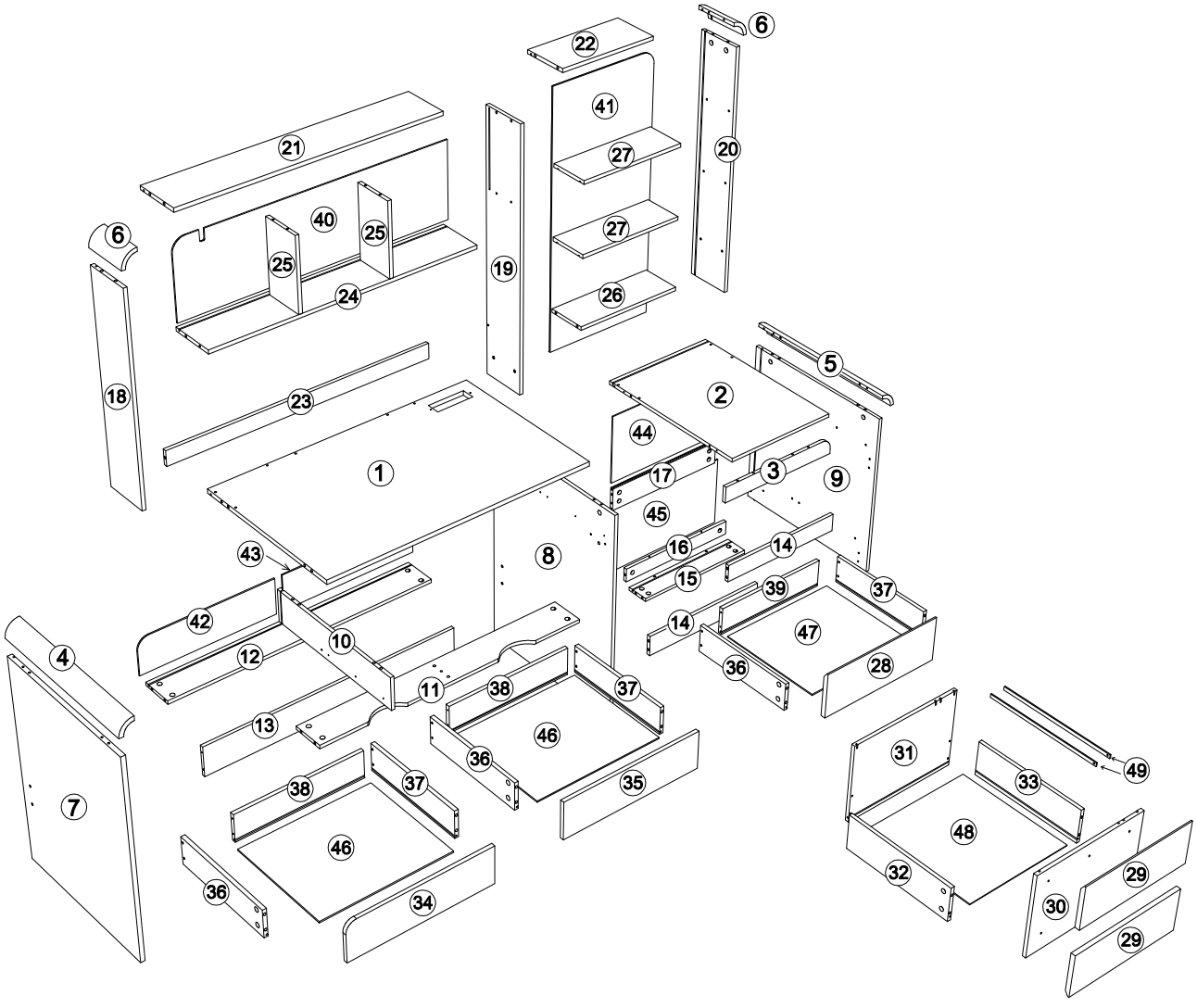

3 HARDWARE CONTENTS

A x 76+3 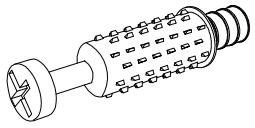 Ø6 x34mm	**B x 76+3** 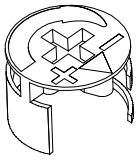 Ø15 x10mm	**C x 23+2**  **Ø6 x30mm**	**D x 42+3** 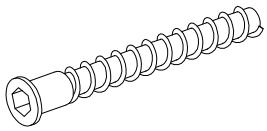 M5 x38mm
E x 50+3 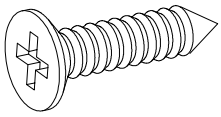 M3.5 x12mm	**F x 4** 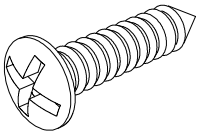 M3.5 x14mm	**G x 8** 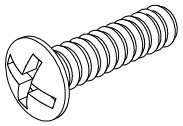 5/32" x20mm	**H x 1**  M4
I x 8 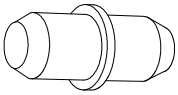	**J x 12** 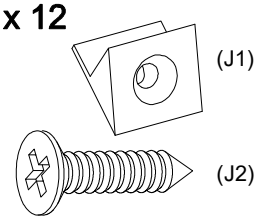 (J1) (J2) M3.5 x14mm	**K x 2** 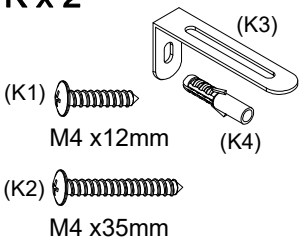 (K3) (K1) M4 x12mm (K4) (K2) M4 x35mm	**L x 1** 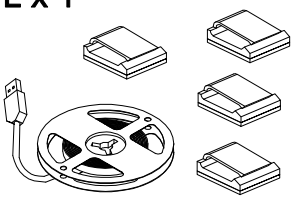 (L1) (L2)
M x 4 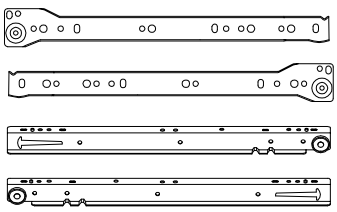 CL CR DL DR **14" Drawer slide**		**N x 1** 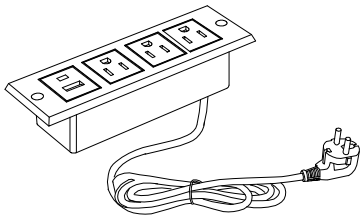	

4 INSTALLATION / INSTALACIÓN

1 Parts needed
Piezas necesarias

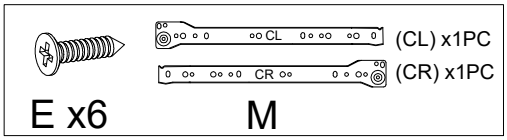

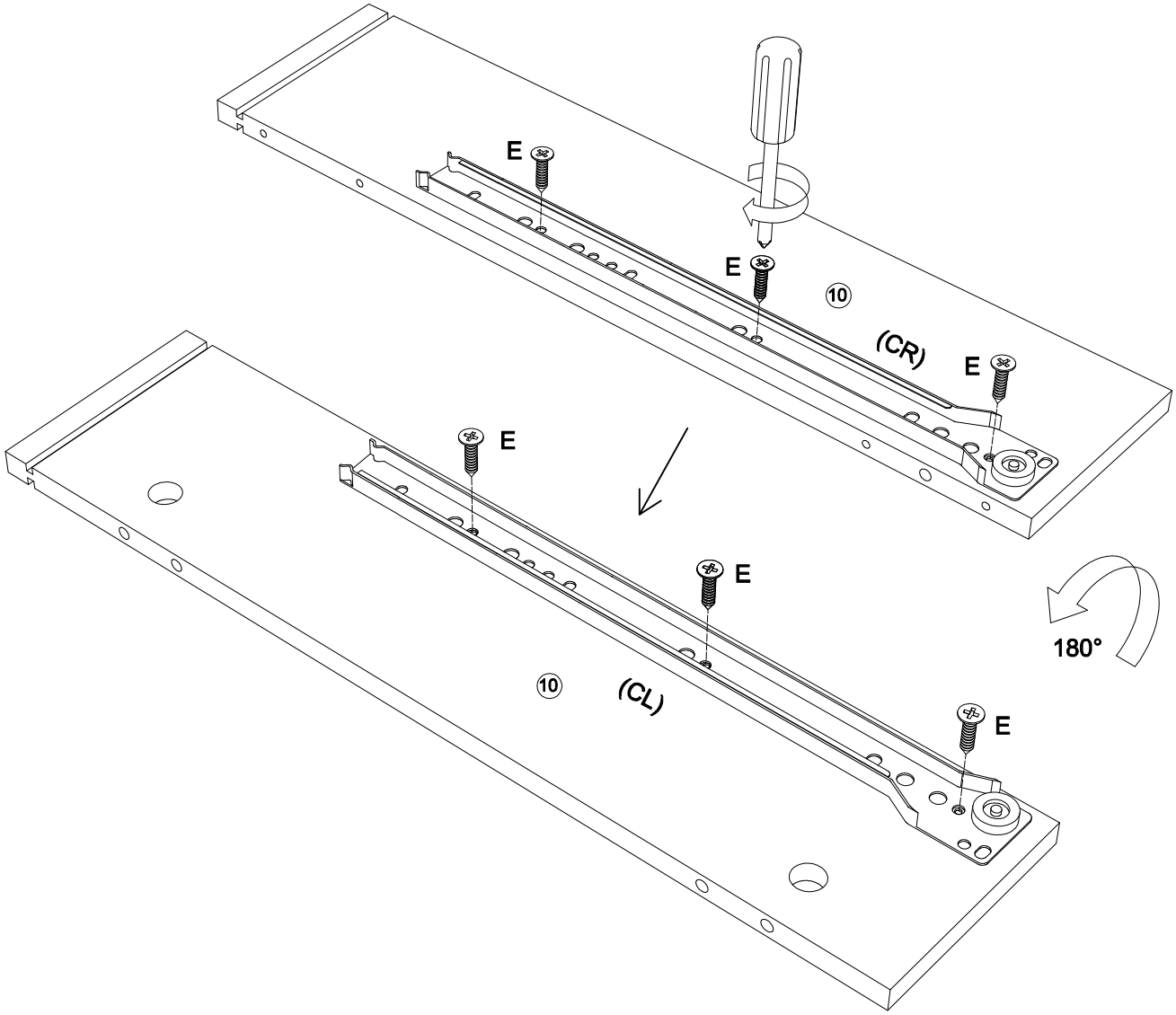

4 INSTALLATION / INSTALACIÓN

2 Parts needed
Piezas necesarias

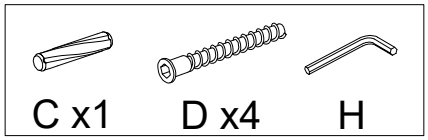

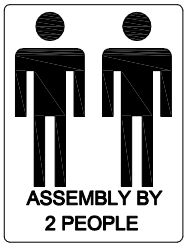

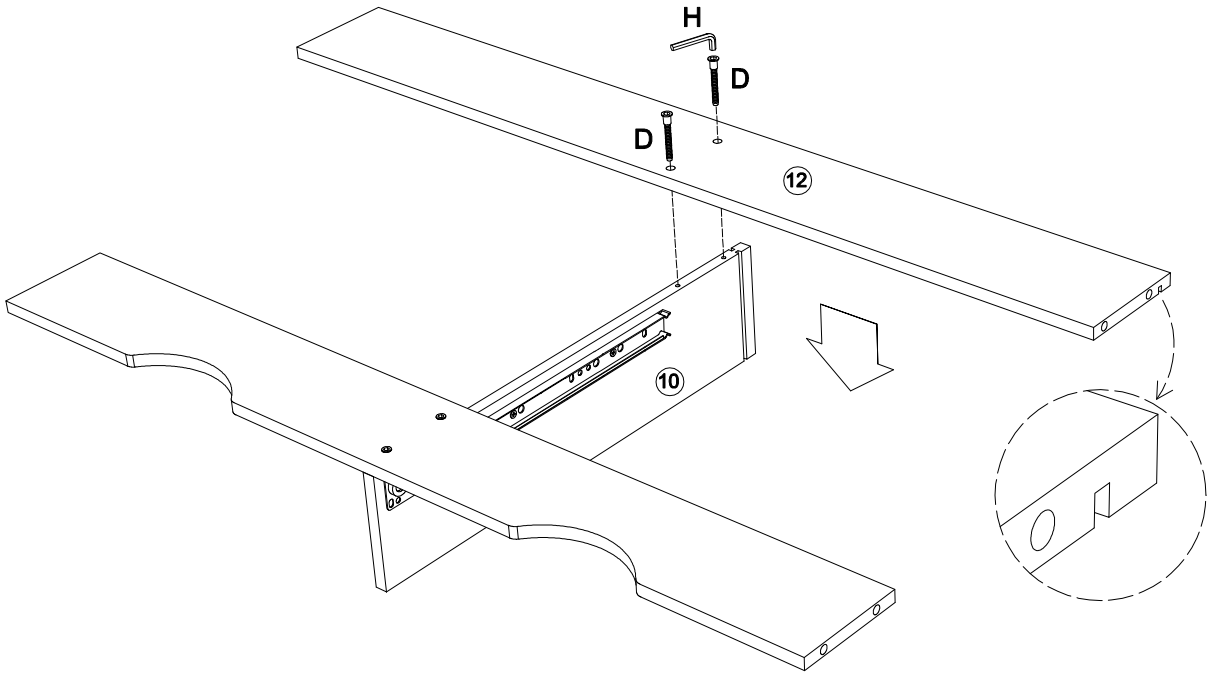

4 INSTALLATION / INSTALACIÓN

3 Parts needed
Piezas necesarias

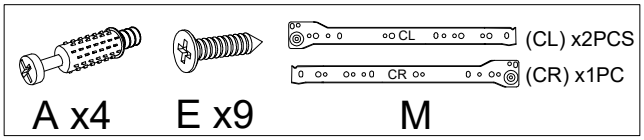

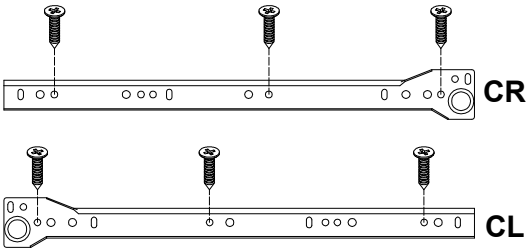

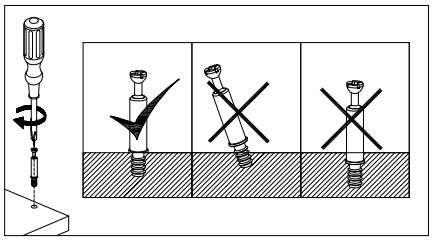

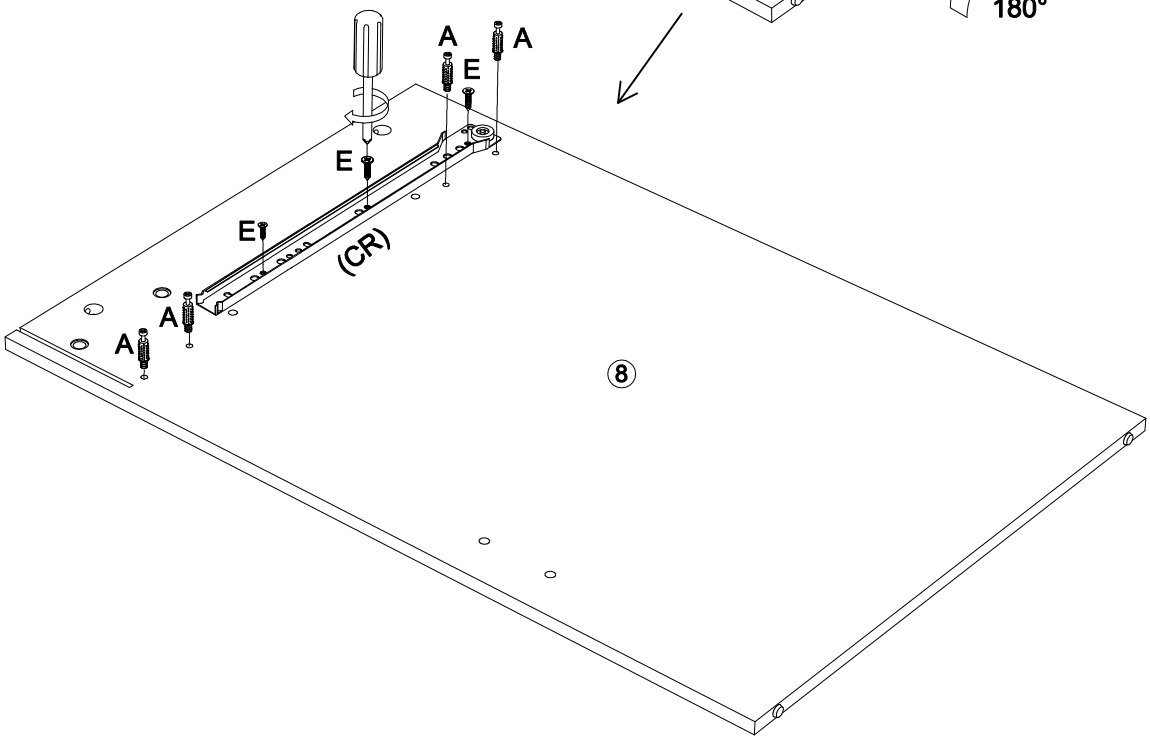

4 INSTALLATION / INSTALACIÓN

4 Parts needed
Piezas necesarias

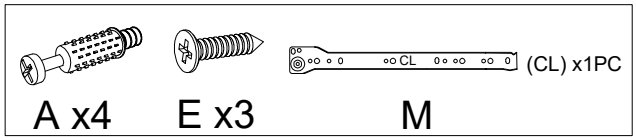

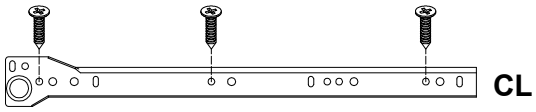

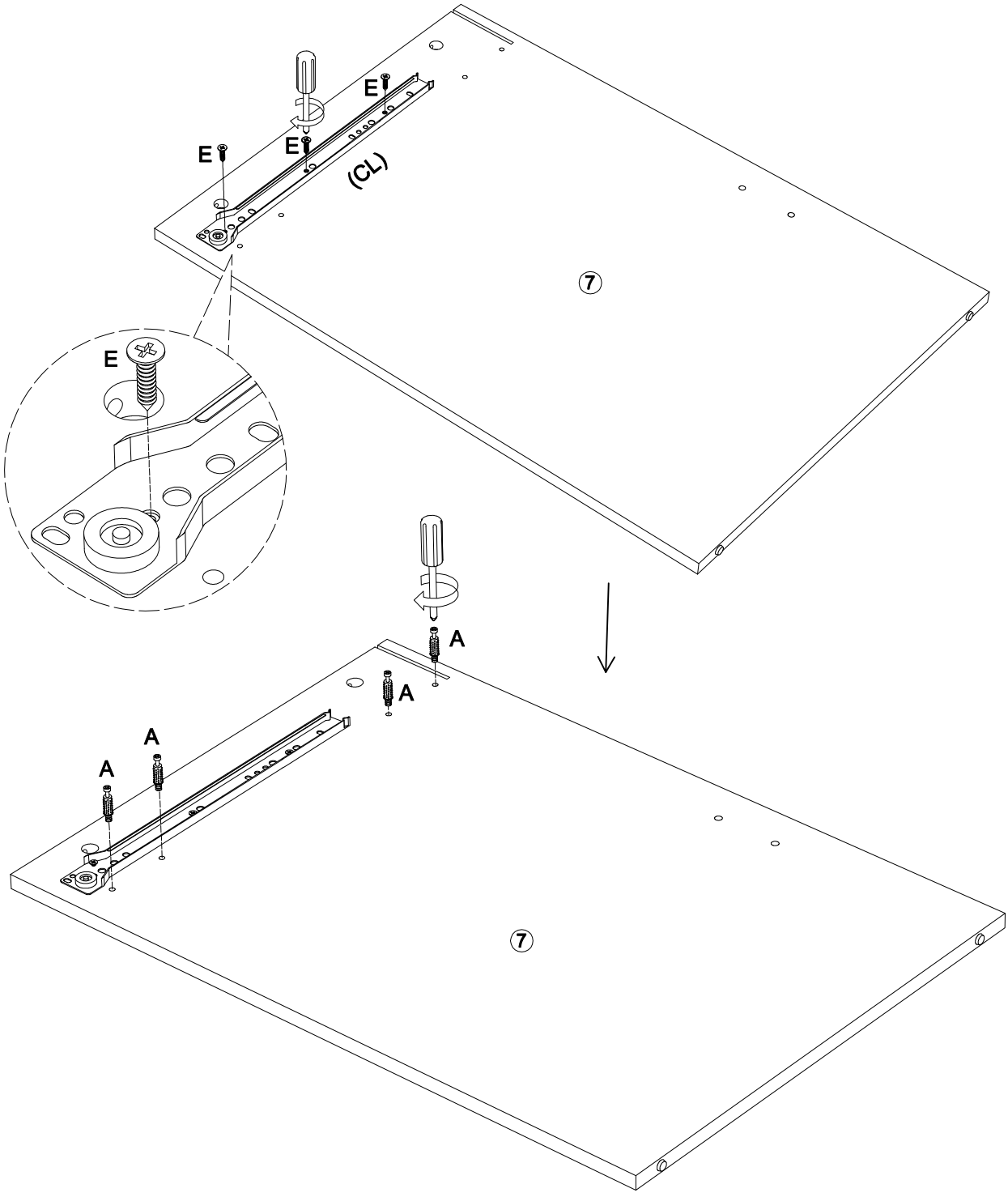

4 INSTALLATION / INSTALACIÓN

5 Parts needed
Piezas necesarias

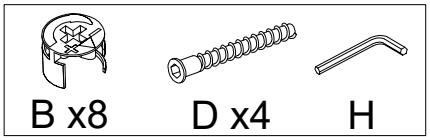

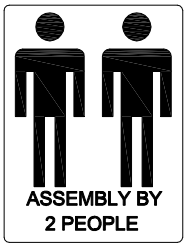

4 INSTALLATION / INSTALACIÓN

6 Parts needed
Piezas necesarias

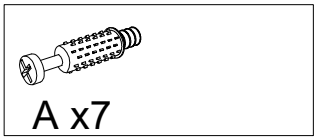

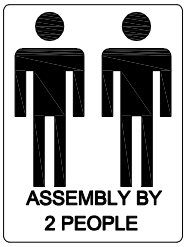

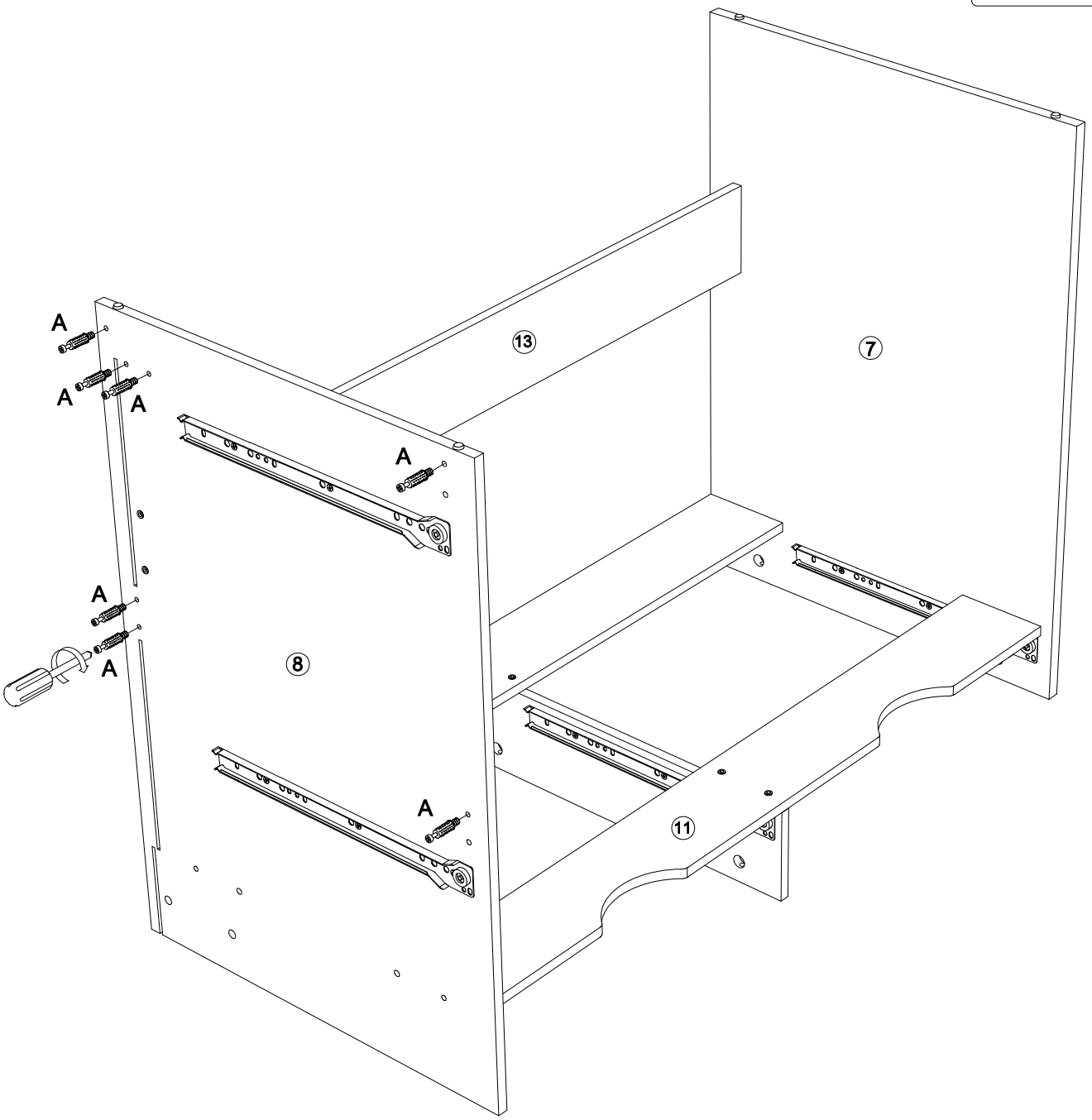

4 INSTALLATION / INSTALACIÓN

7 Parts needed
Piezas necesarias

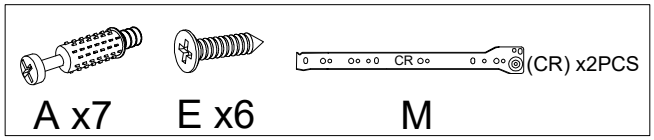

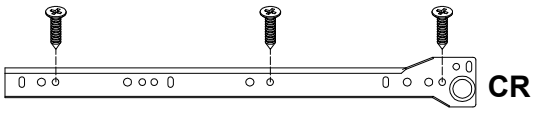

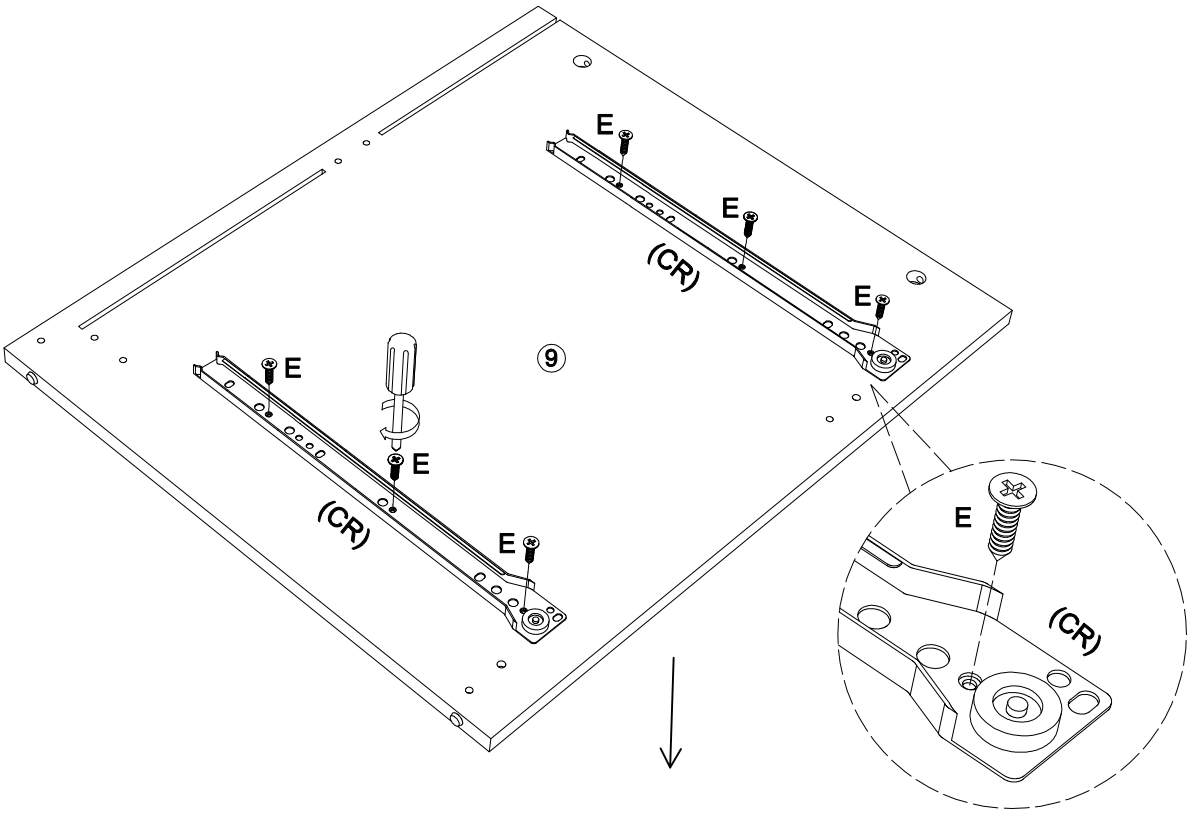

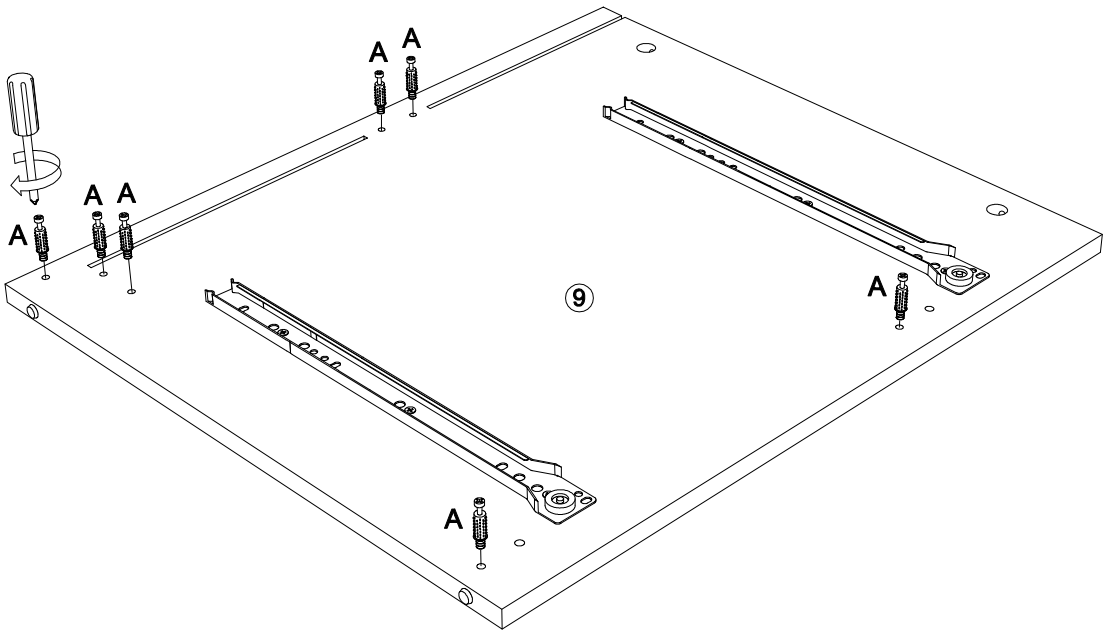

4 INSTALLATION / INSTALACIÓN

8 Parts needed
Piezas necesarias

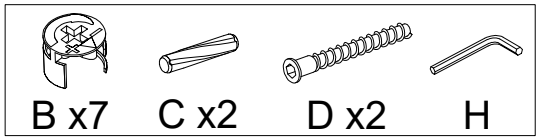

4 INSTALLATION / INSTALACIÓN

9 Parts needed
Piezas necesarias

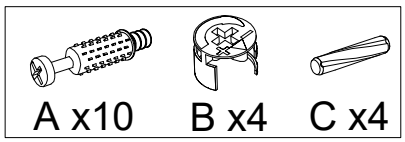

4 INSTALLATION / INSTALACIÓN

10 Parts needed
Piezas necesarias

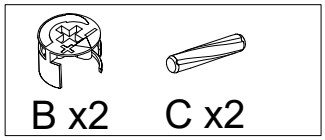

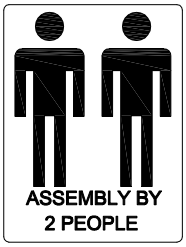

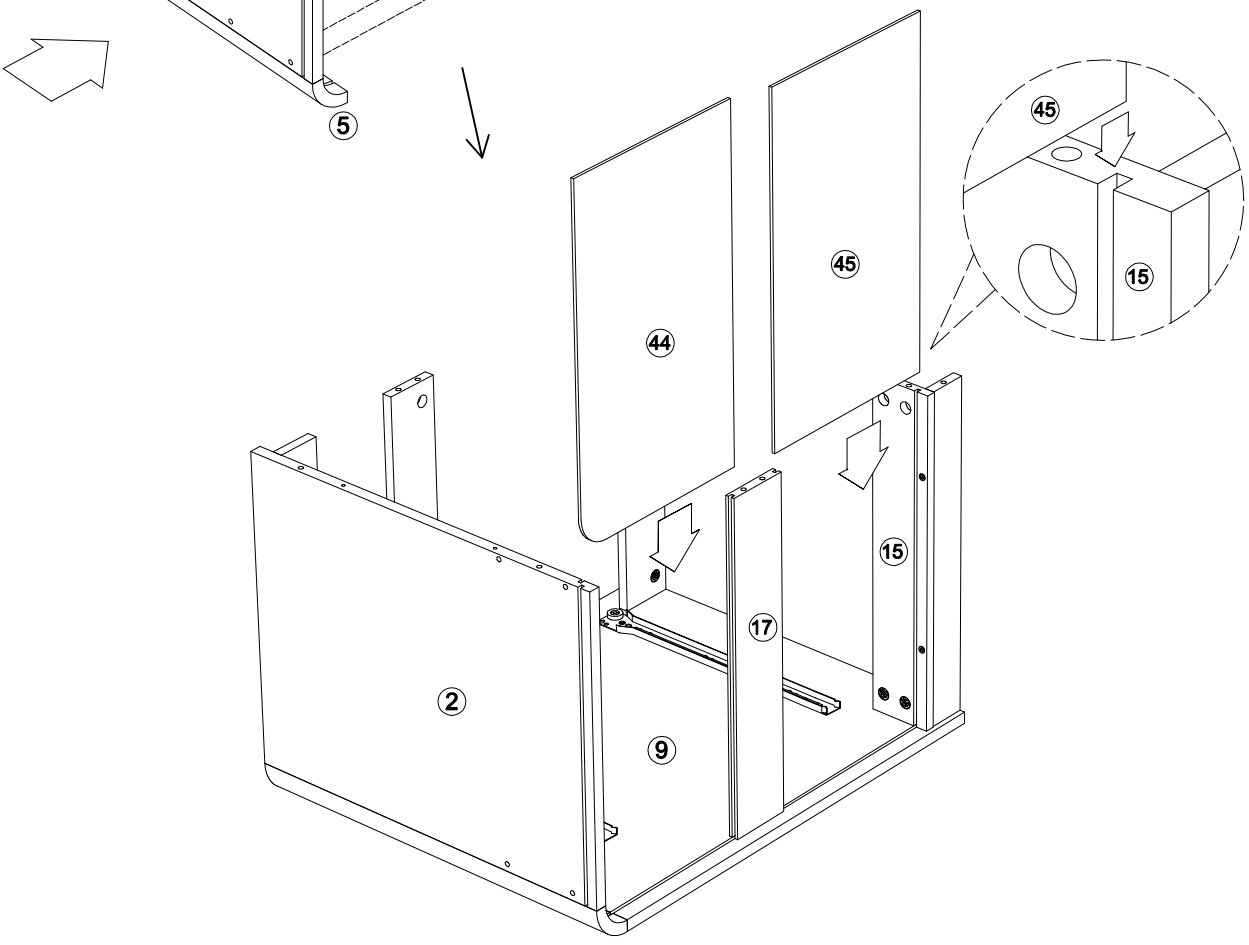

4 INSTALLATION / INSTALACIÓN

11 Parts needed
Piezas necesarias

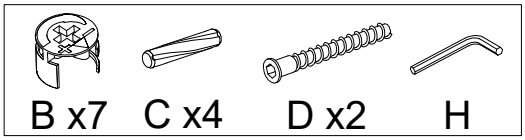

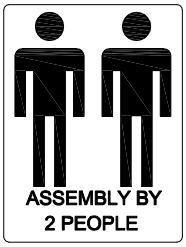

4 INSTALLATION / INSTALACIÓN

12 Parts needed
Piezas necesarias

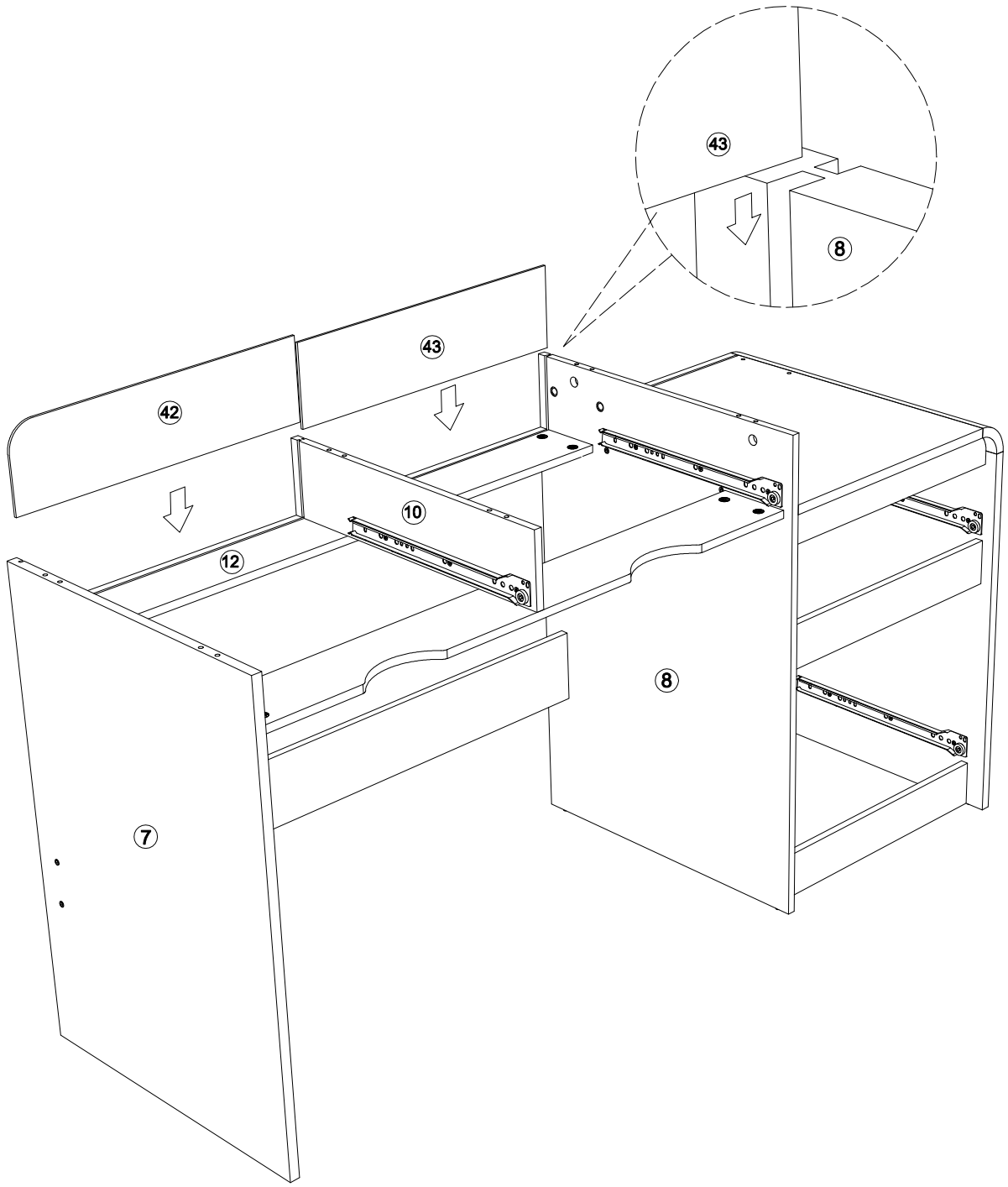

4 INSTALLATION / INSTALACION

13 Parts needed
Piezas necesarias

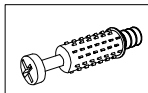

A x16

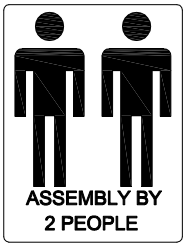

14 Parts needed
Piezas necesarias



B x2

4 INSTALLATION / INSTALACION

15 Parts needed
Piezas necesarias

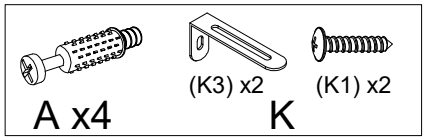

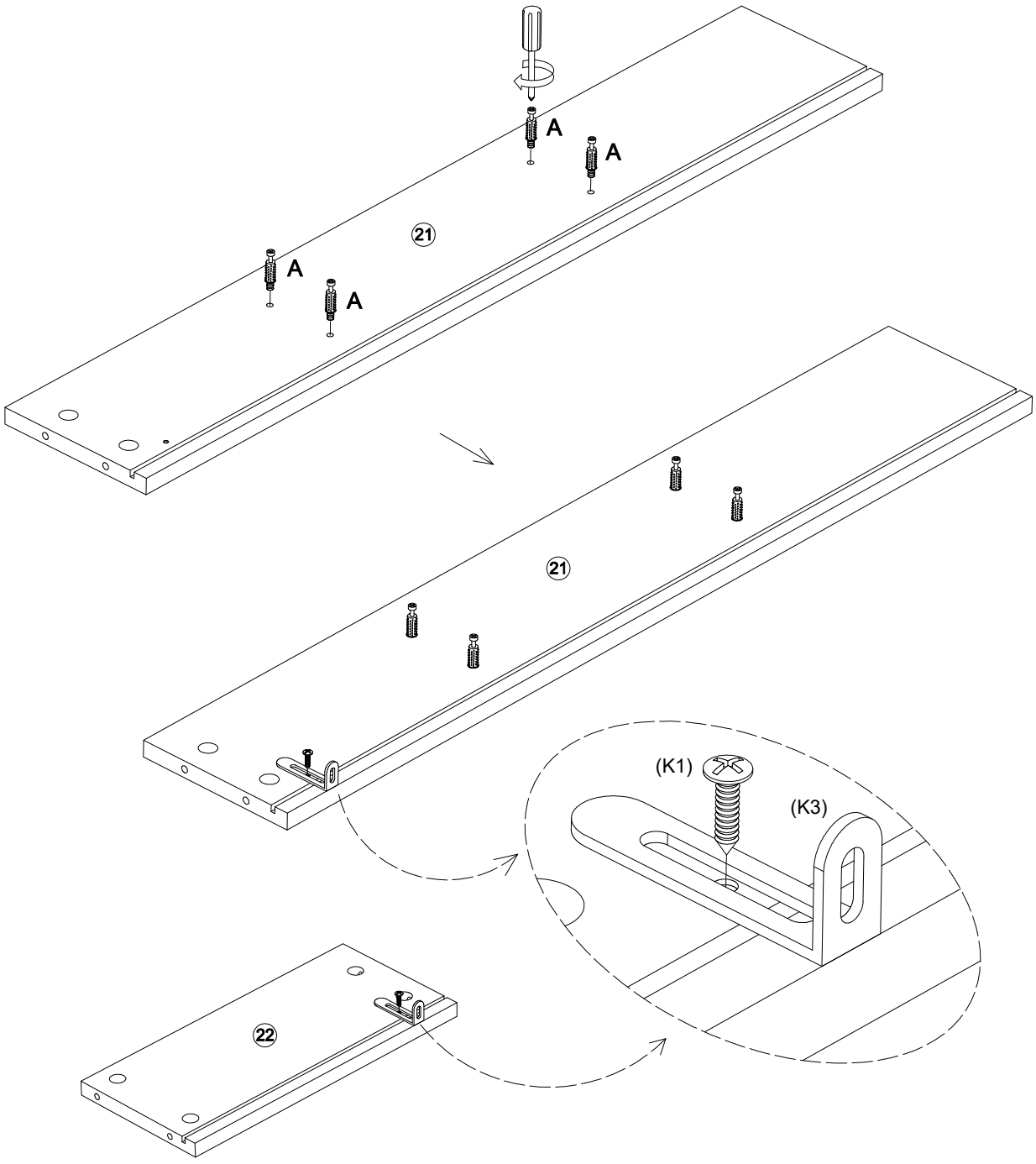

Do not fully tighten the adjustable wall bracket (K3) onto panel 21 22 until the end of step 37

4 INSTALLATION / INSTALACION

16 Parts needed
Piezas necesarias

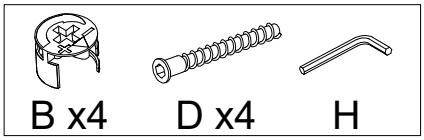

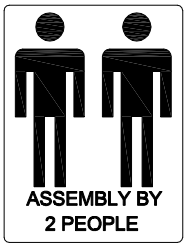

4 INSTALLATION / INSTALACION

17 Parts needed
Piezas necesarias

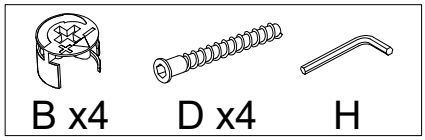

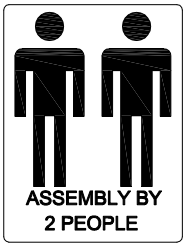

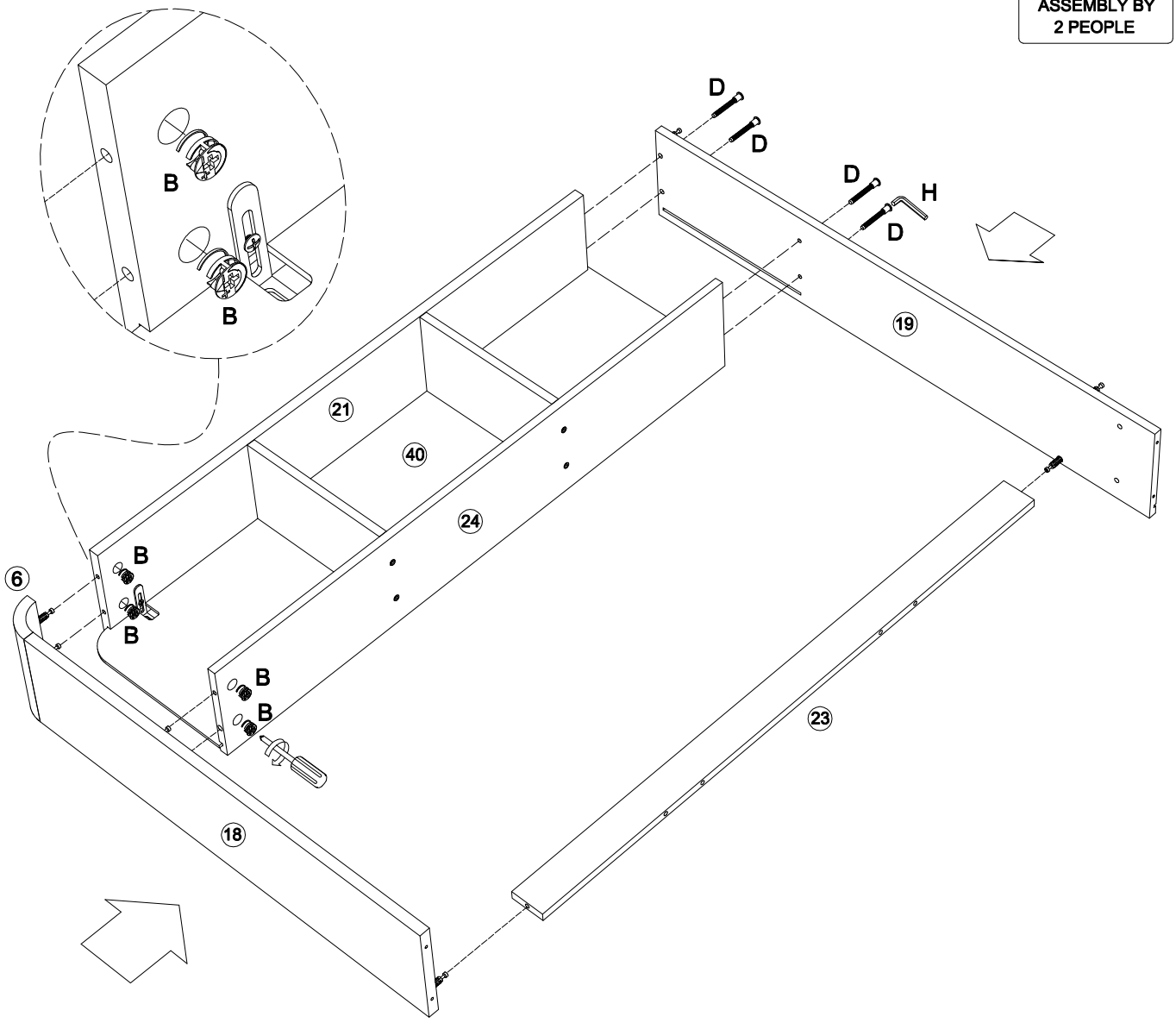

4 INSTALLATION / INSTALACION

18 Parts needed
Piezas necesarias



B x4

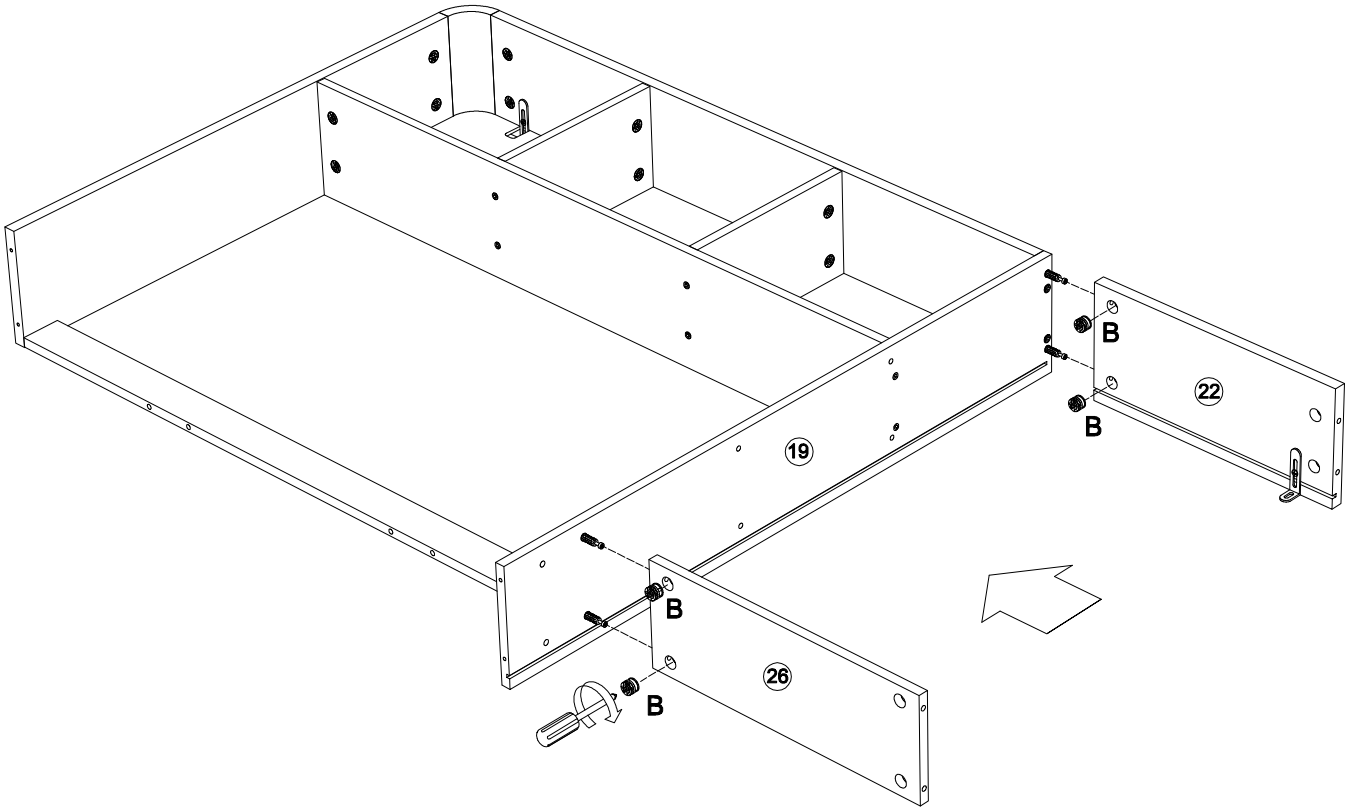

19 Parts needed
Piezas necesarias

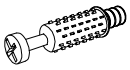

A x2

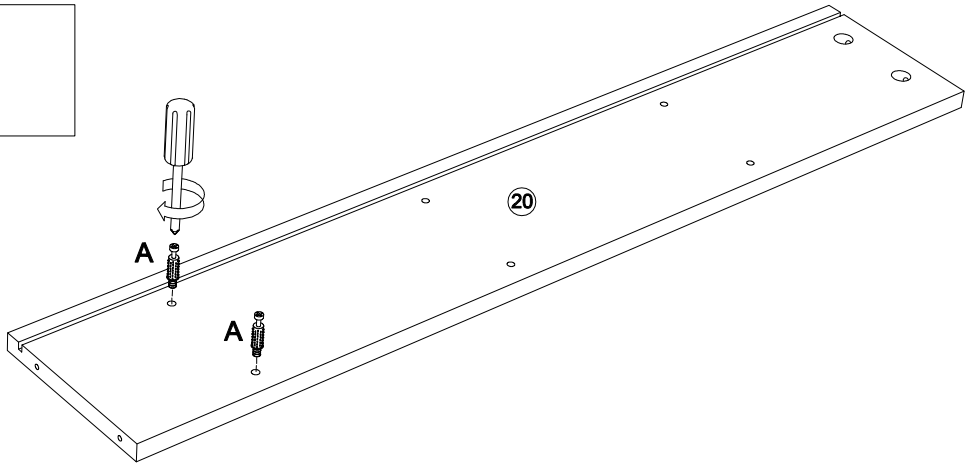

4 INSTALLATION / INSTALACION

20 Parts needed
Piezas necesarias

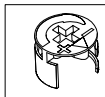

B x6

4 INSTALLATION / INSTALACION

21 Parts needed
Piezas necesarias

L	(L1) (L2)

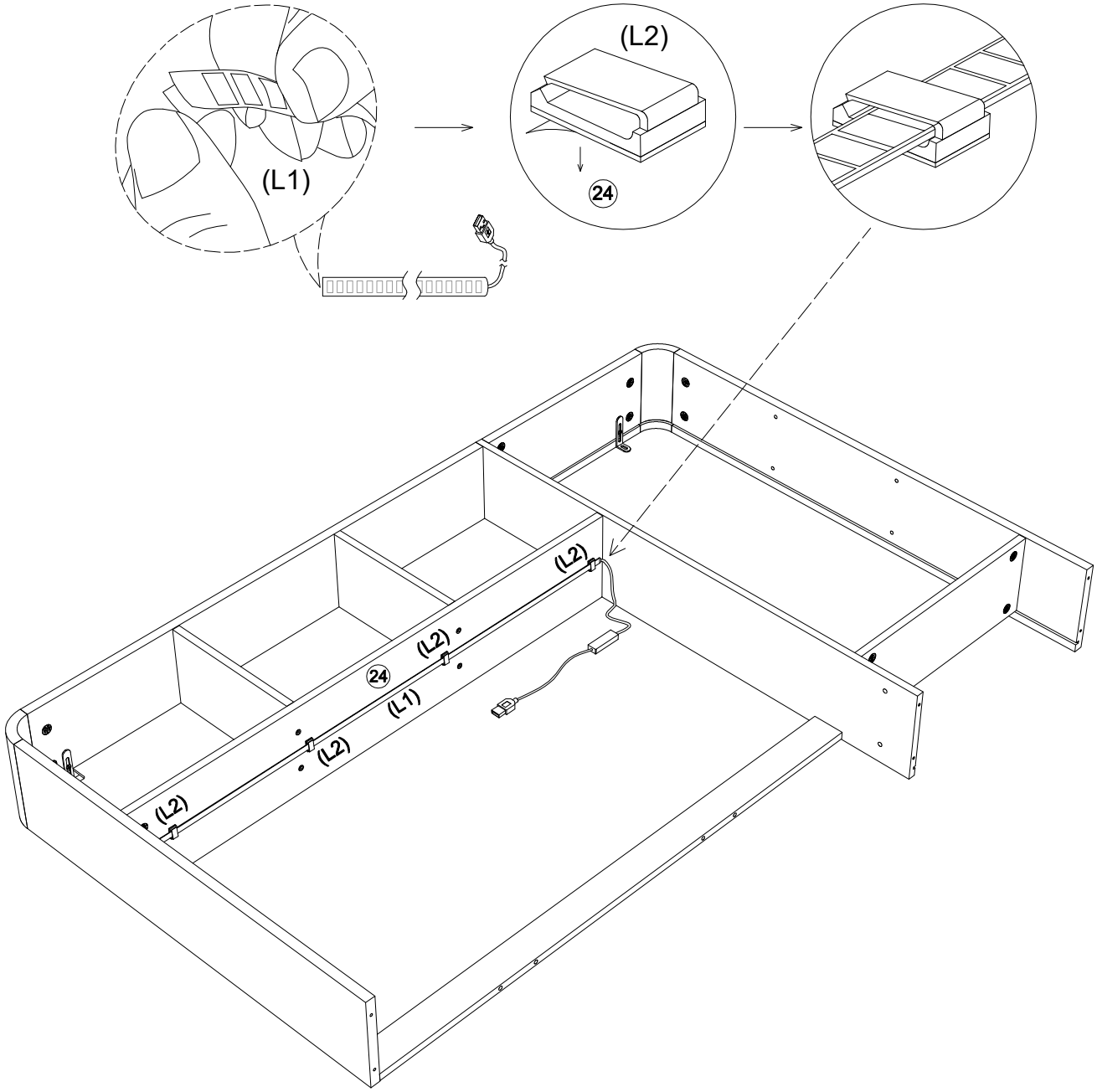

4 INSTALLATION / INSTALACION

22 Parts needed
Piezas necesarias

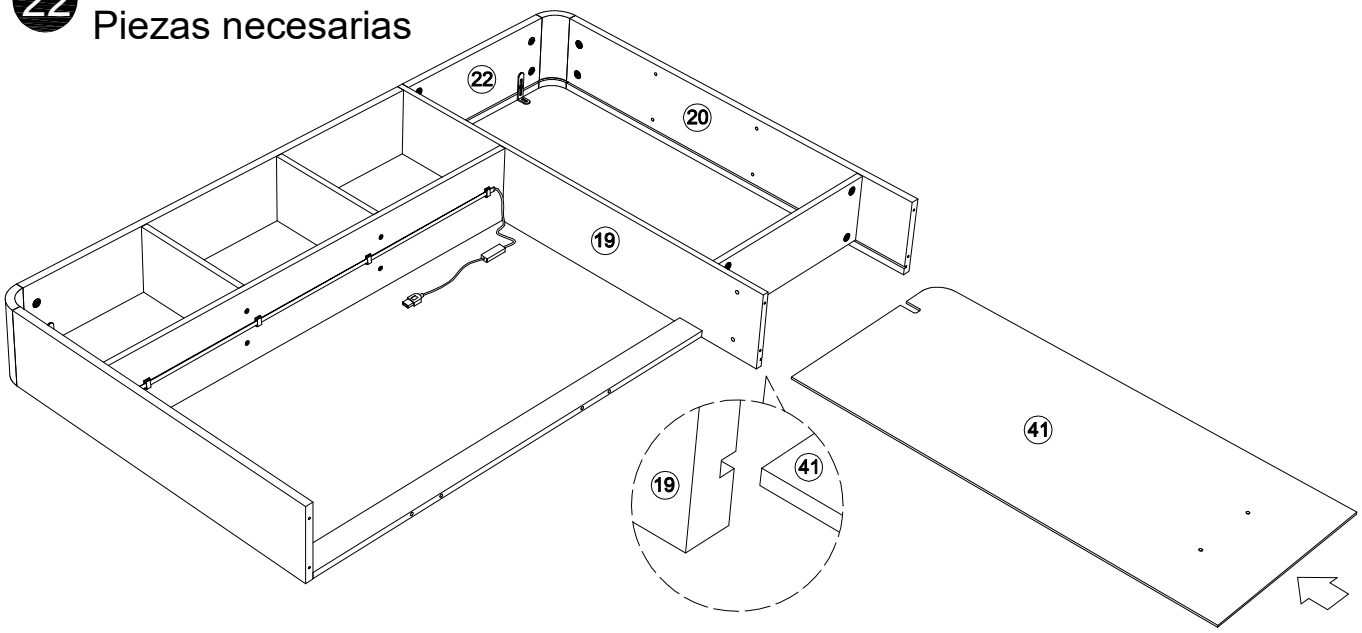

23 Parts needed
Piezas necesarias

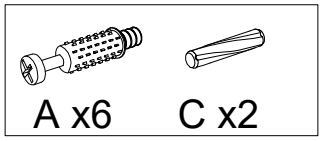

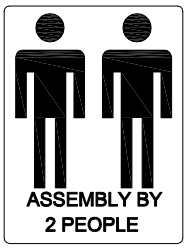

4 INSTALLATION / INSTALACION

24 Parts needed
Piezas necesarias

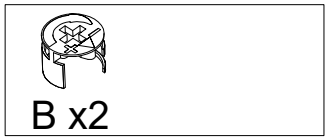

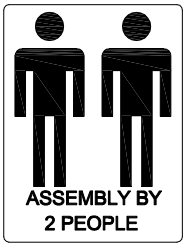

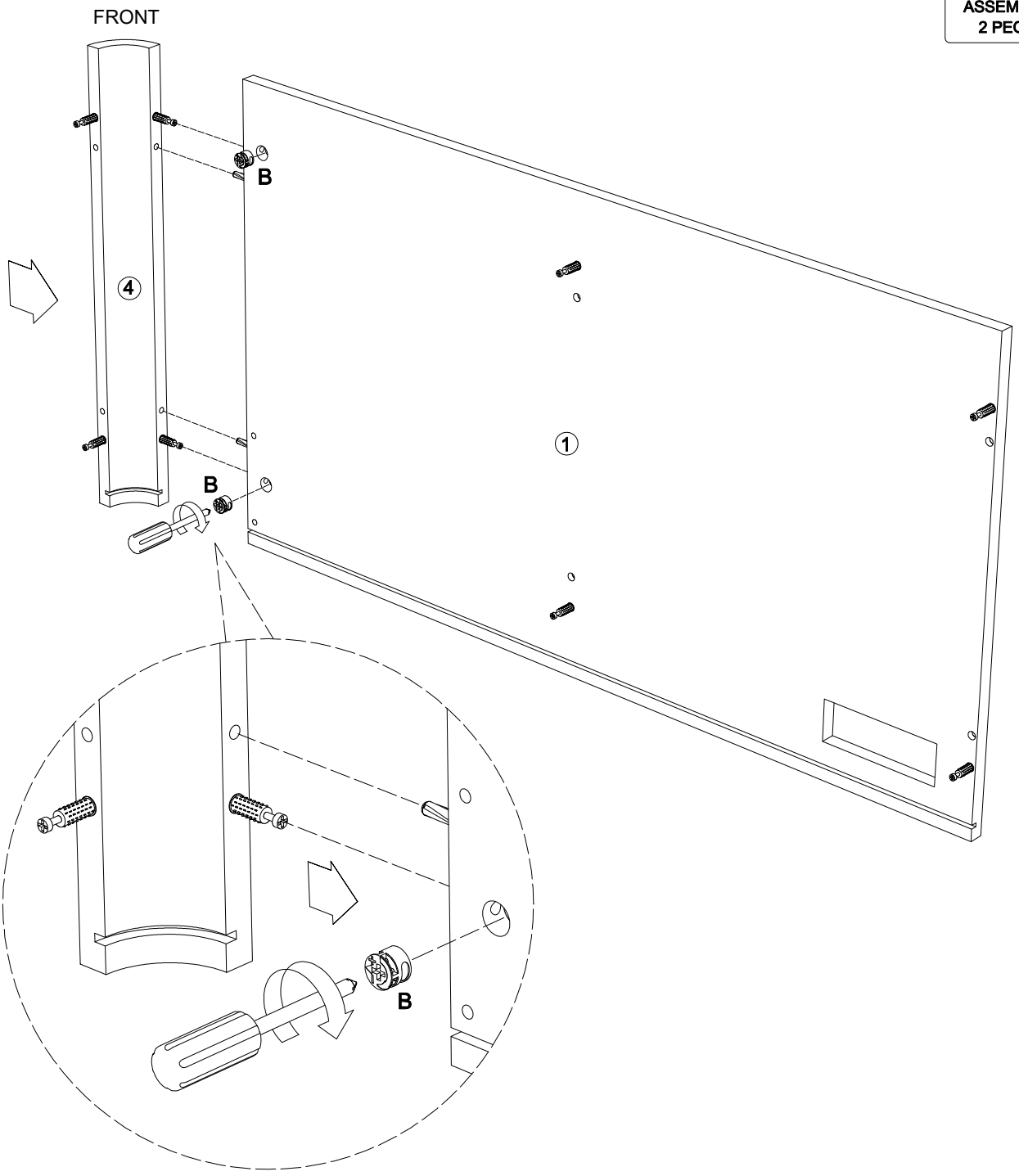

4 INSTALLATION / INSTALACION

25 Parts needed
Piezas necesarias

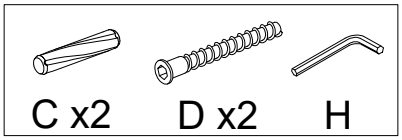

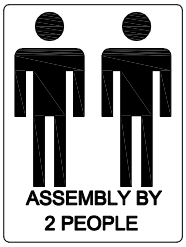

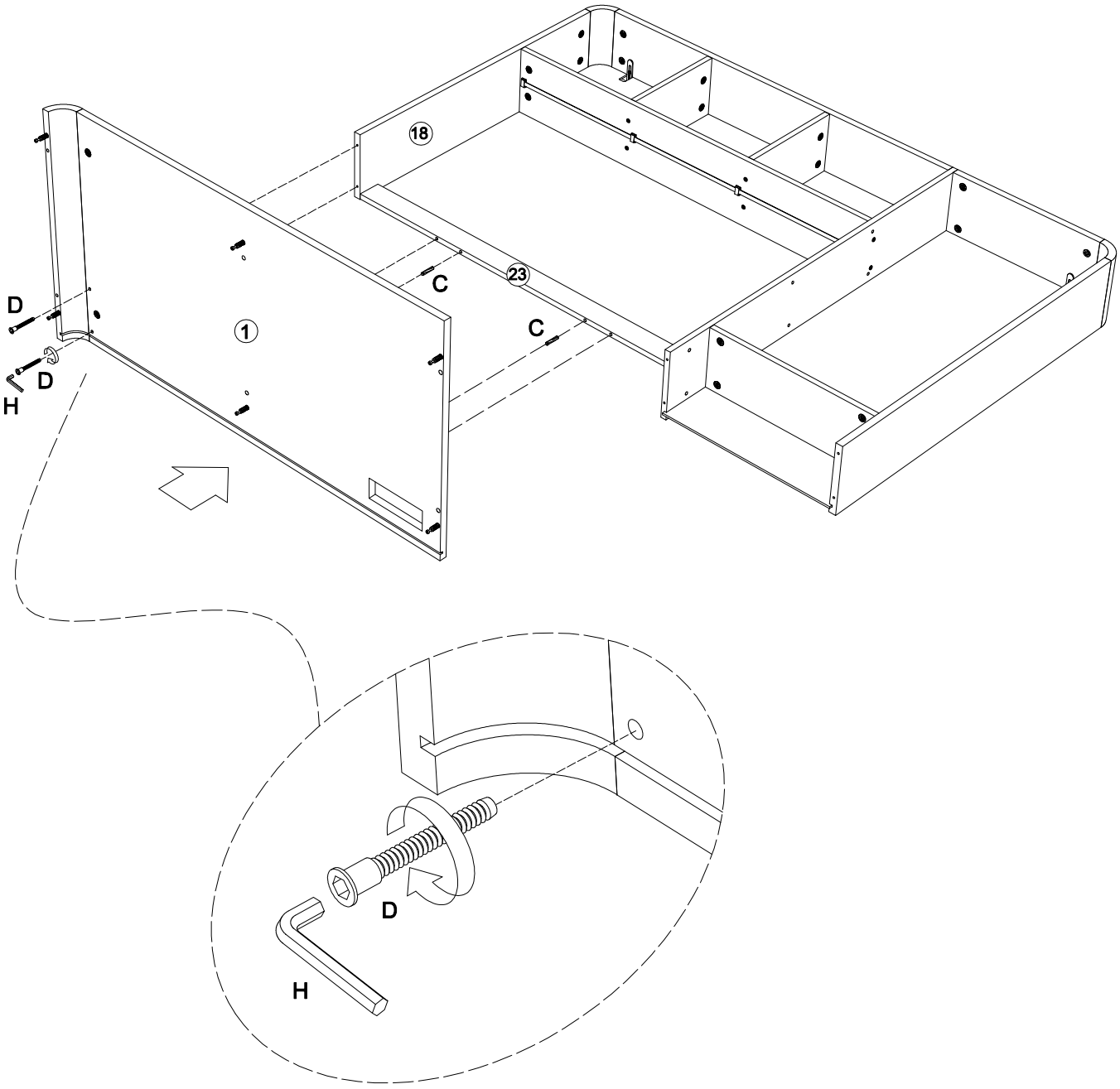

4 INSTALLATION / INSTALACION

26 Parts needed
Piezas necesarias

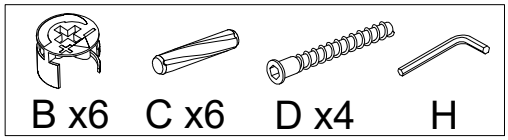

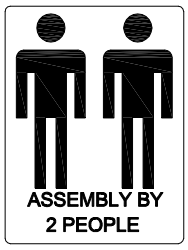

4 INSTALLATION / INSTALACION

27 Parts needed
Piezas necesarias

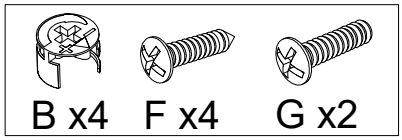

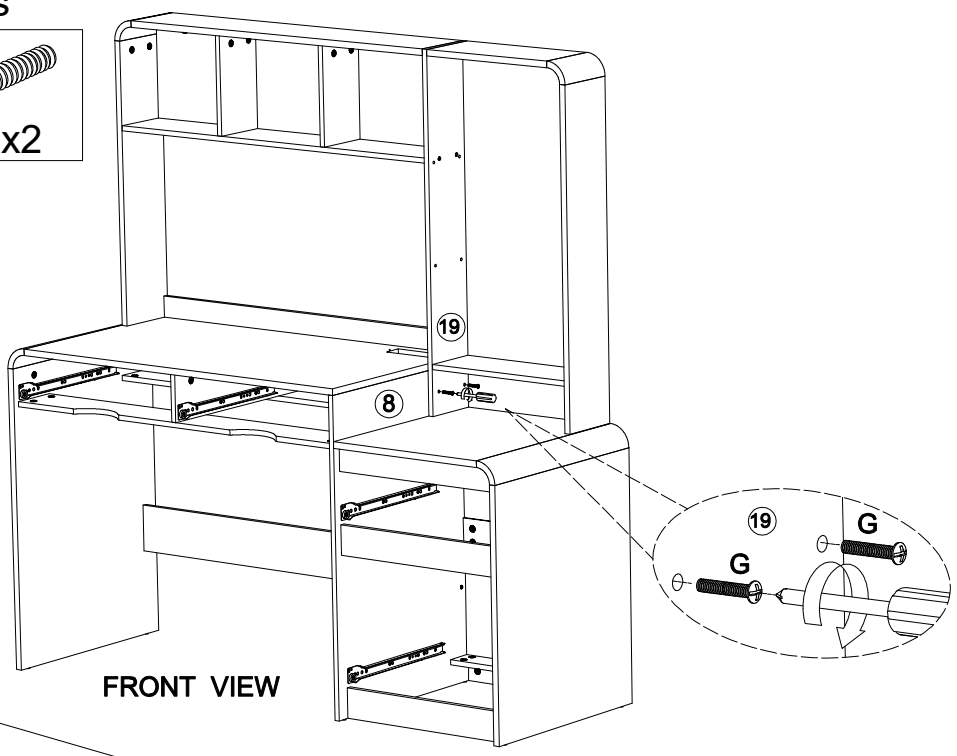

FRONT VIEW

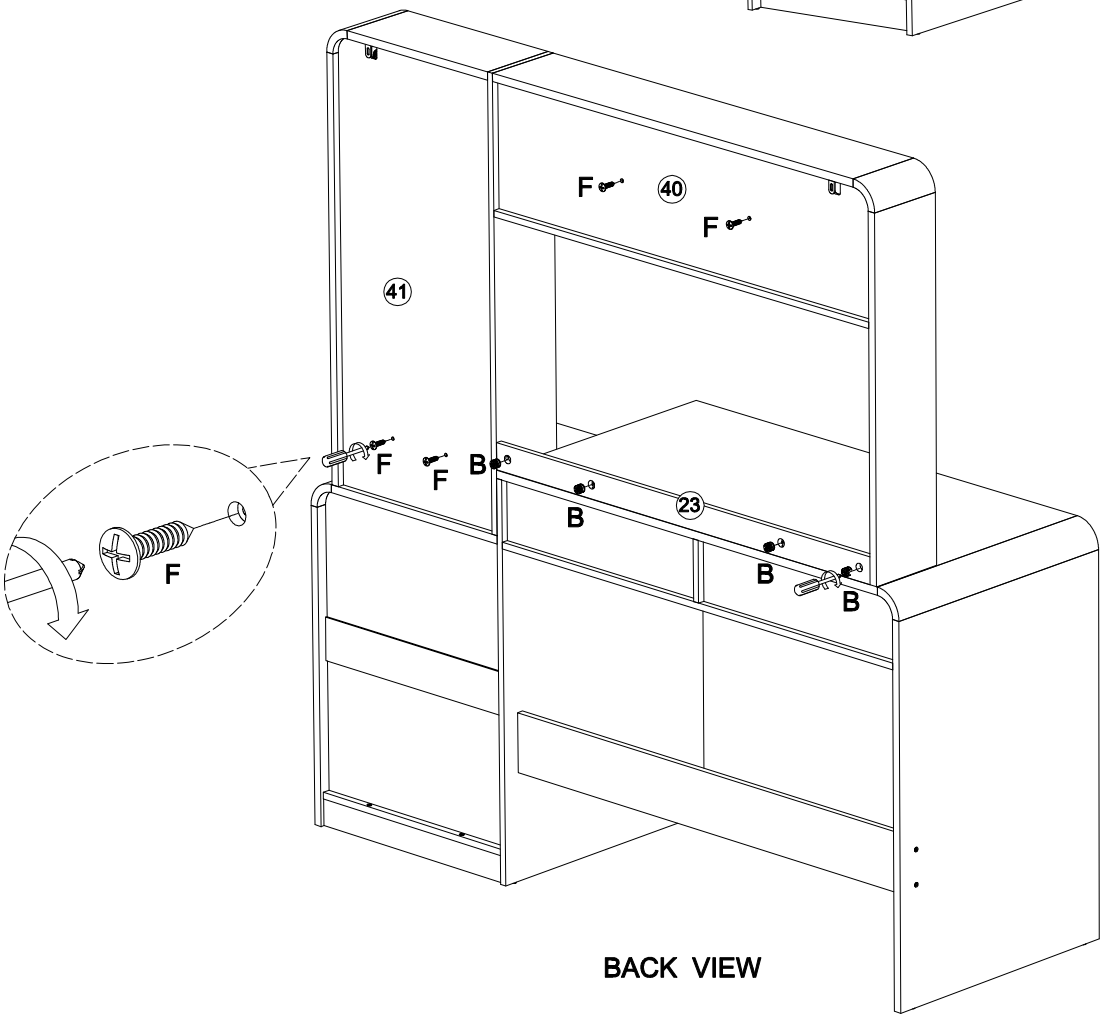

BACK VIEW

4 INSTALLATION / INSTALACION

28 Parts needed
Piezas necesarias

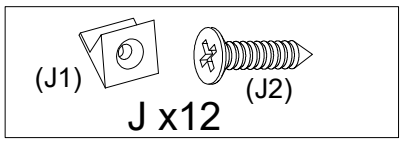

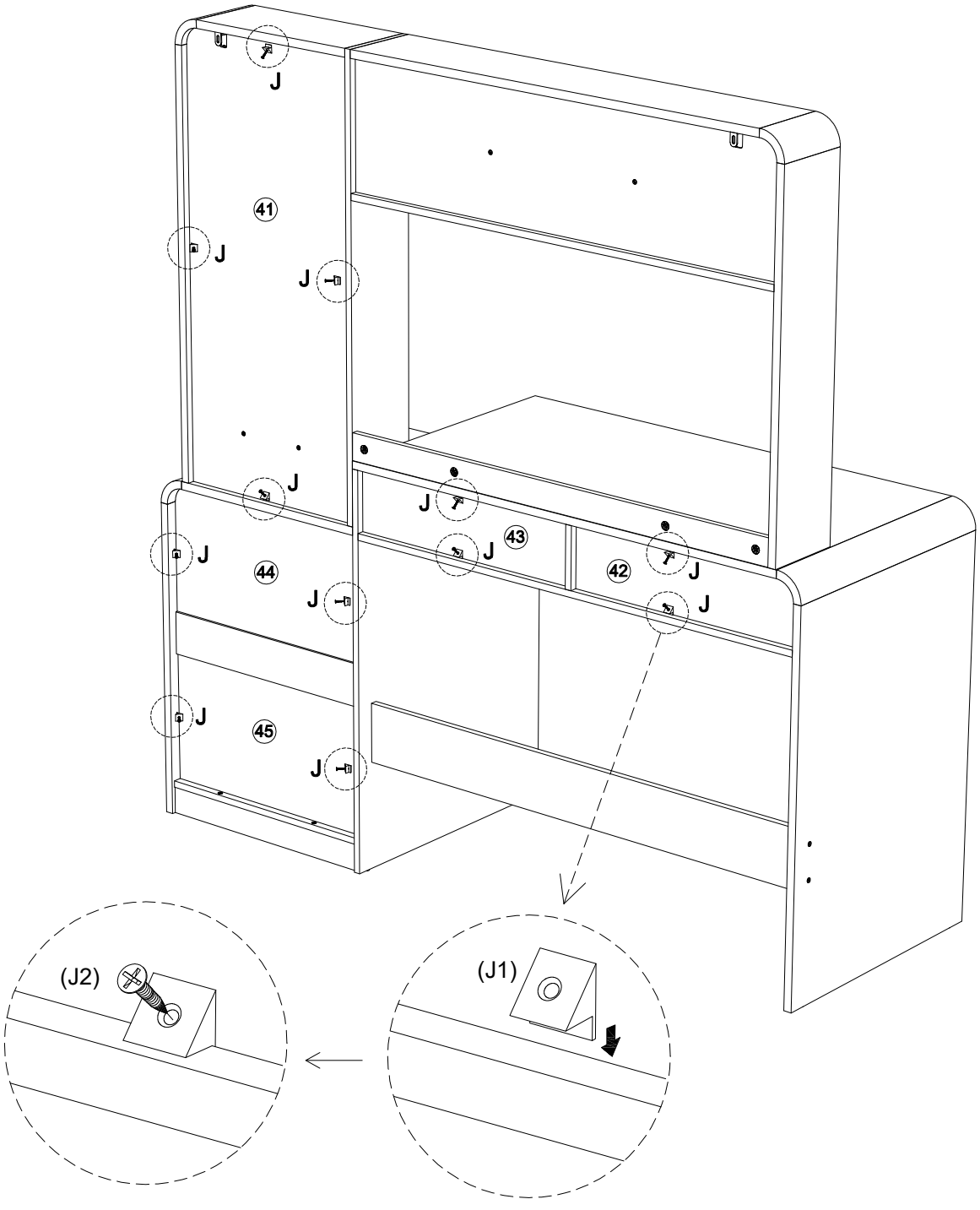

4 INSTALLATION / INSTALACION

29 Parts needed
Piezas necesarias

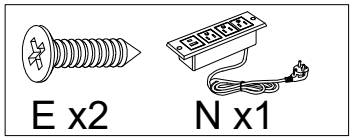

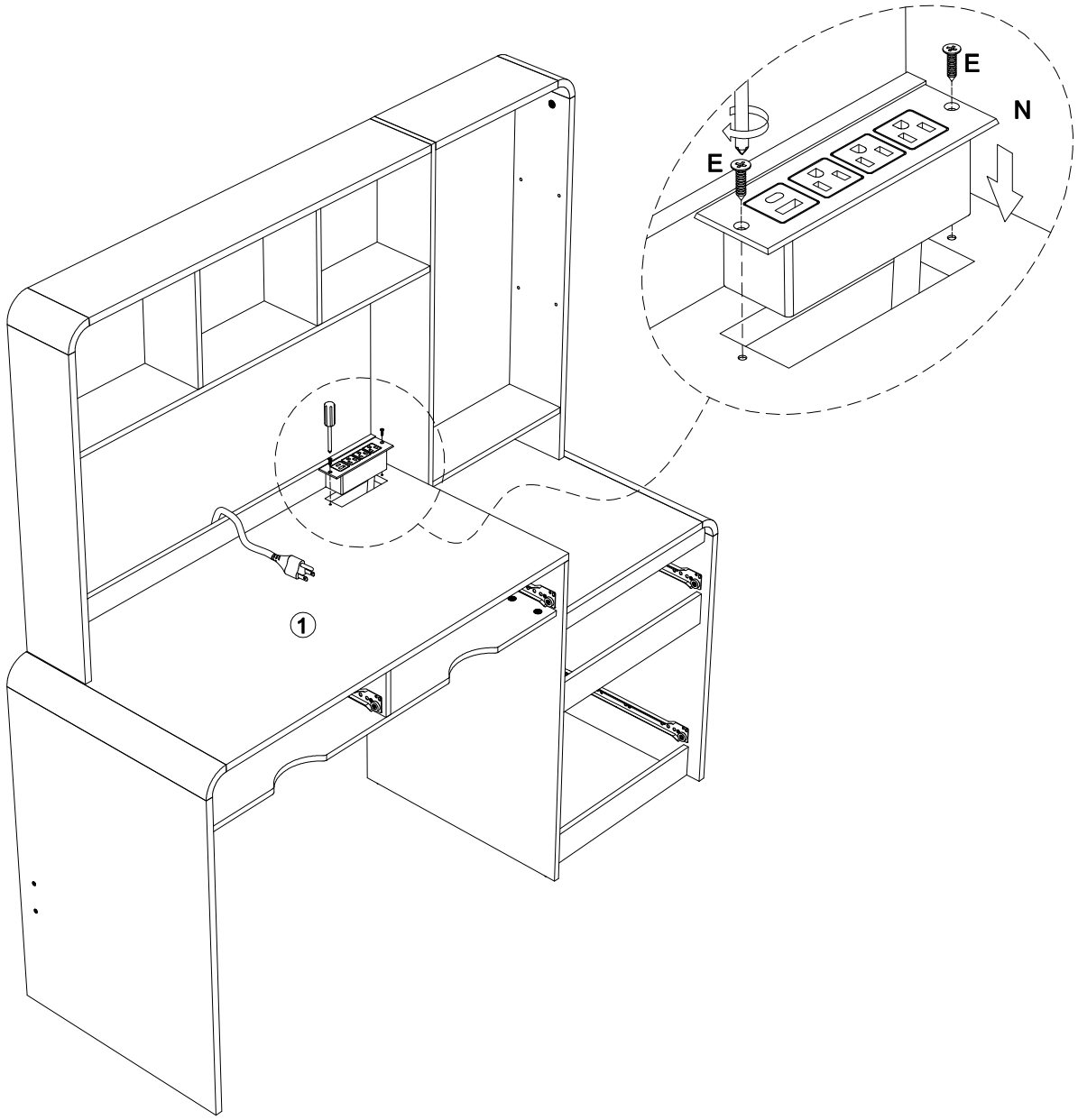

4 INSTALLATION / INSTALACION

30 Parts needed
Piezas necesarias

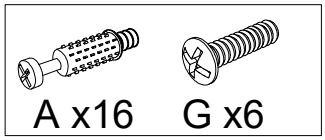

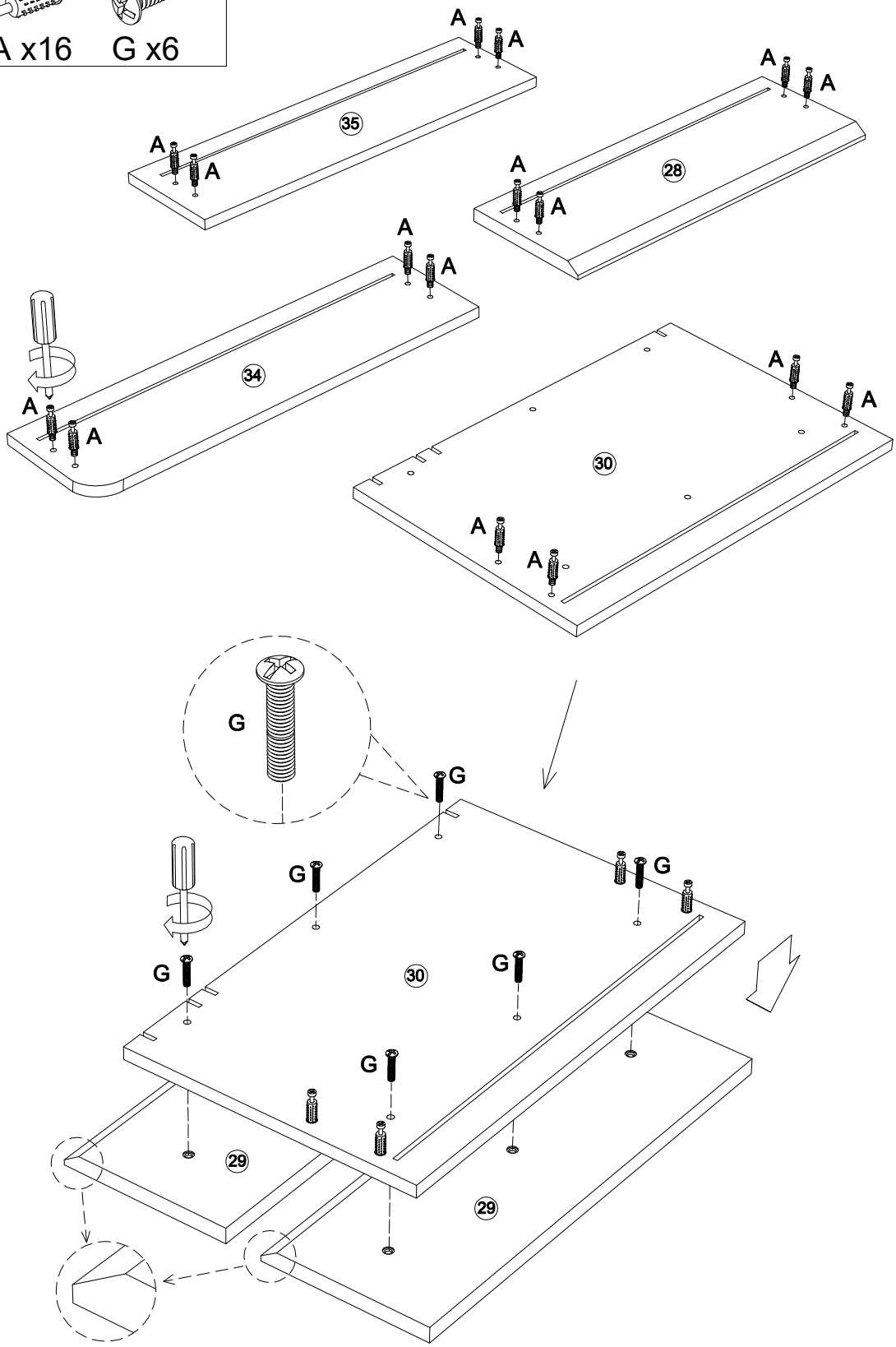

4 INSTALLATION / INSTALACION

31 Parts needed
Piezas necesarias

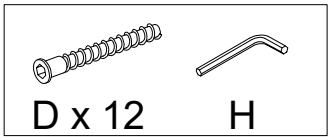

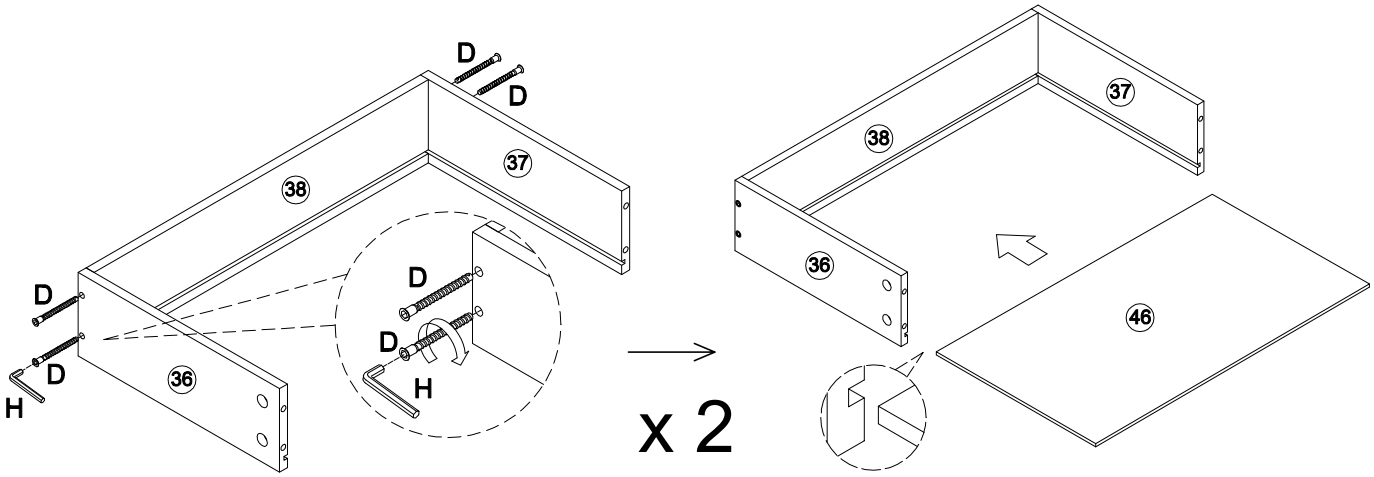

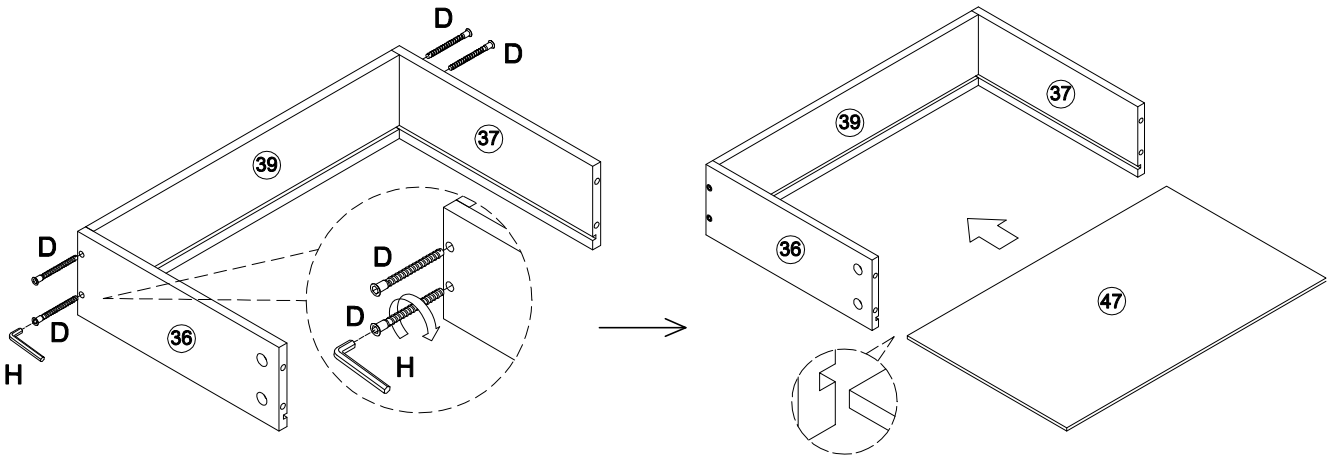

4 INSTALLATION / INSTALACION

32 Parts needed
Piezas necesarias

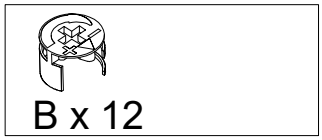

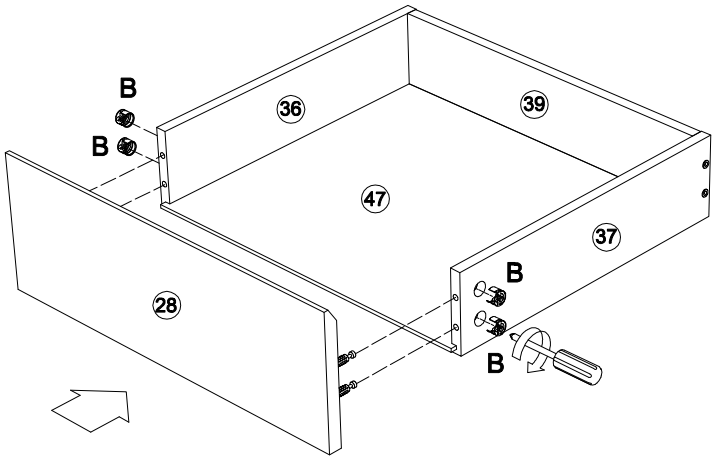

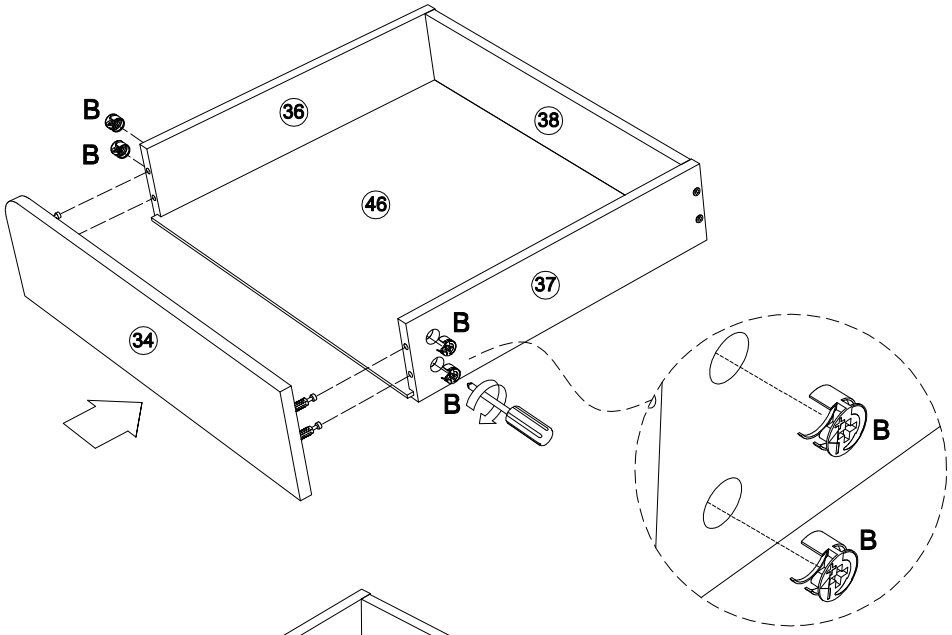

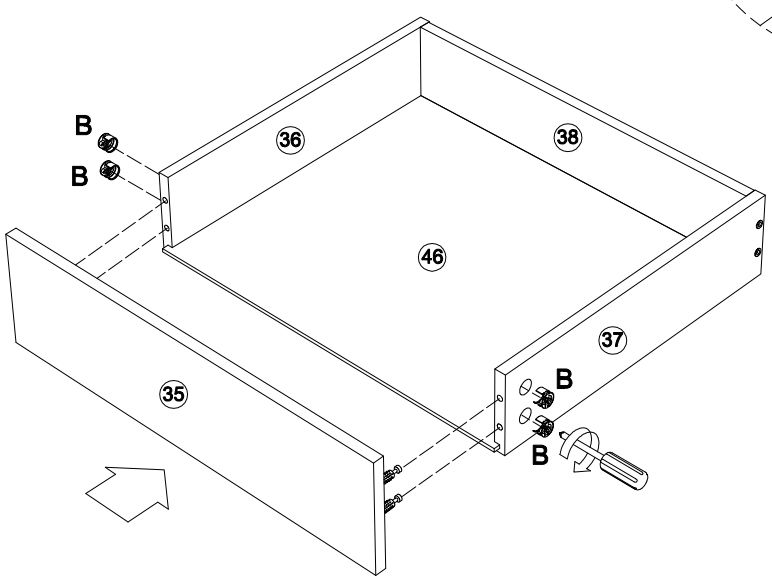

4 INSTALLATION / INSTALACIÓN

33 Parts needed
Piezas necesarias

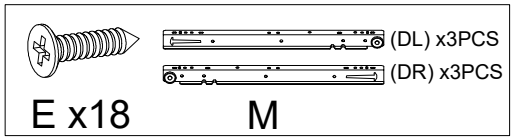

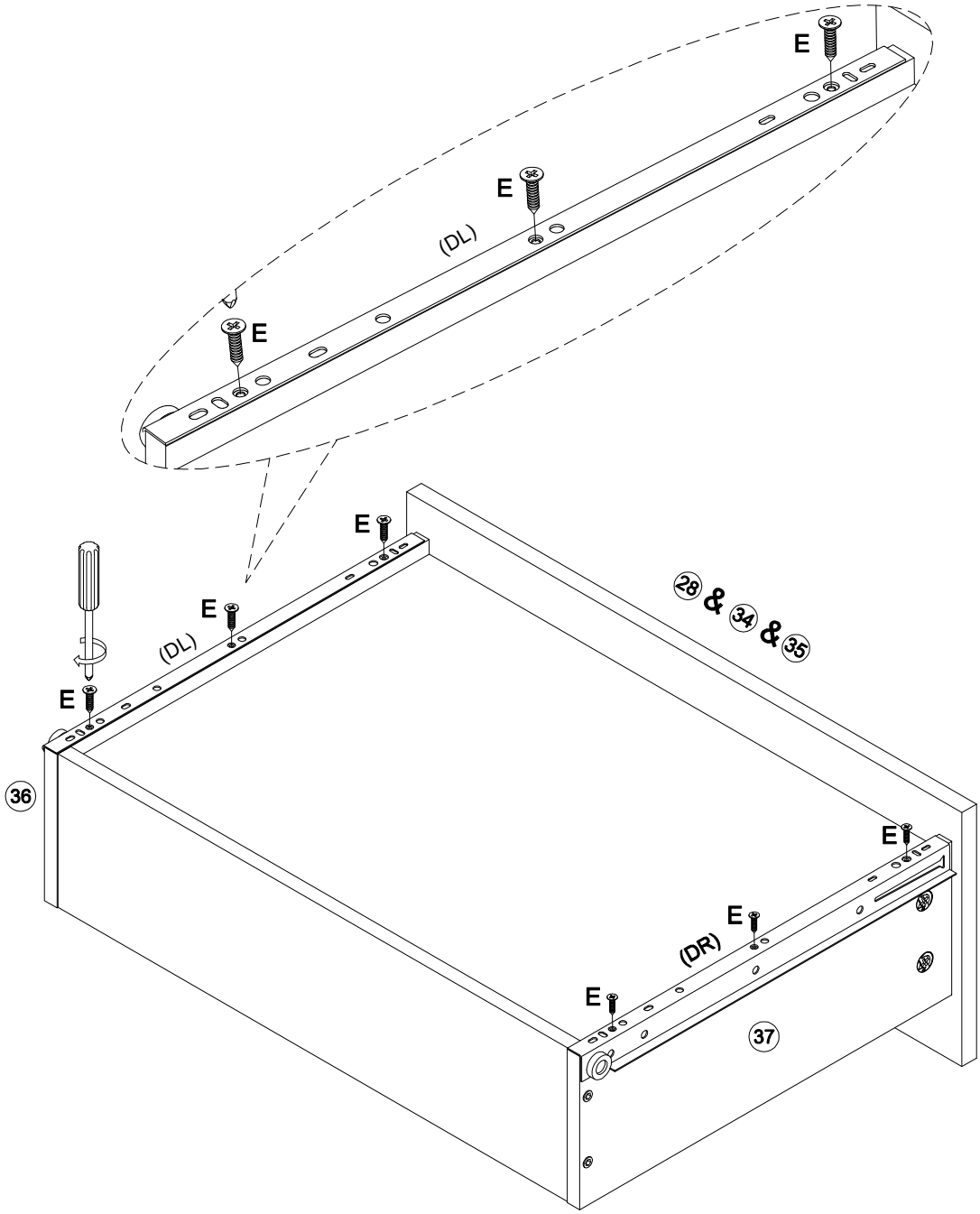

4 INSTALLATION / INSTALACIÓN

34 Parts needed
Piezas necesarias

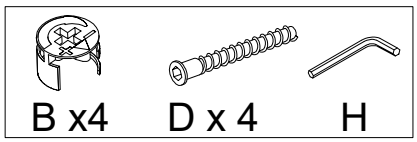

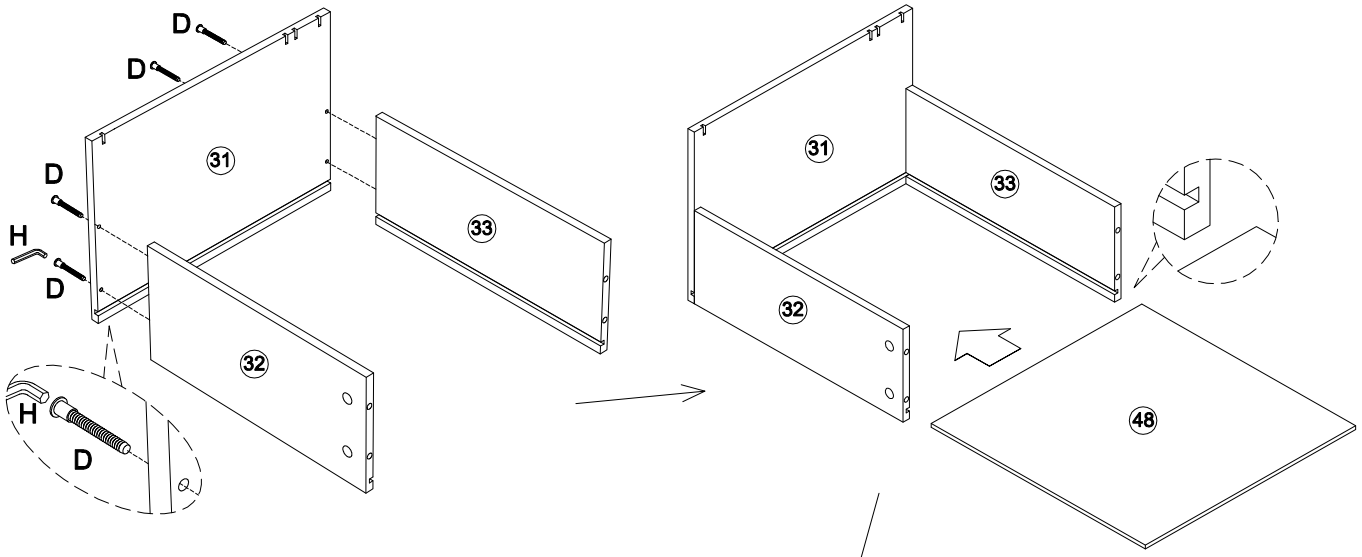

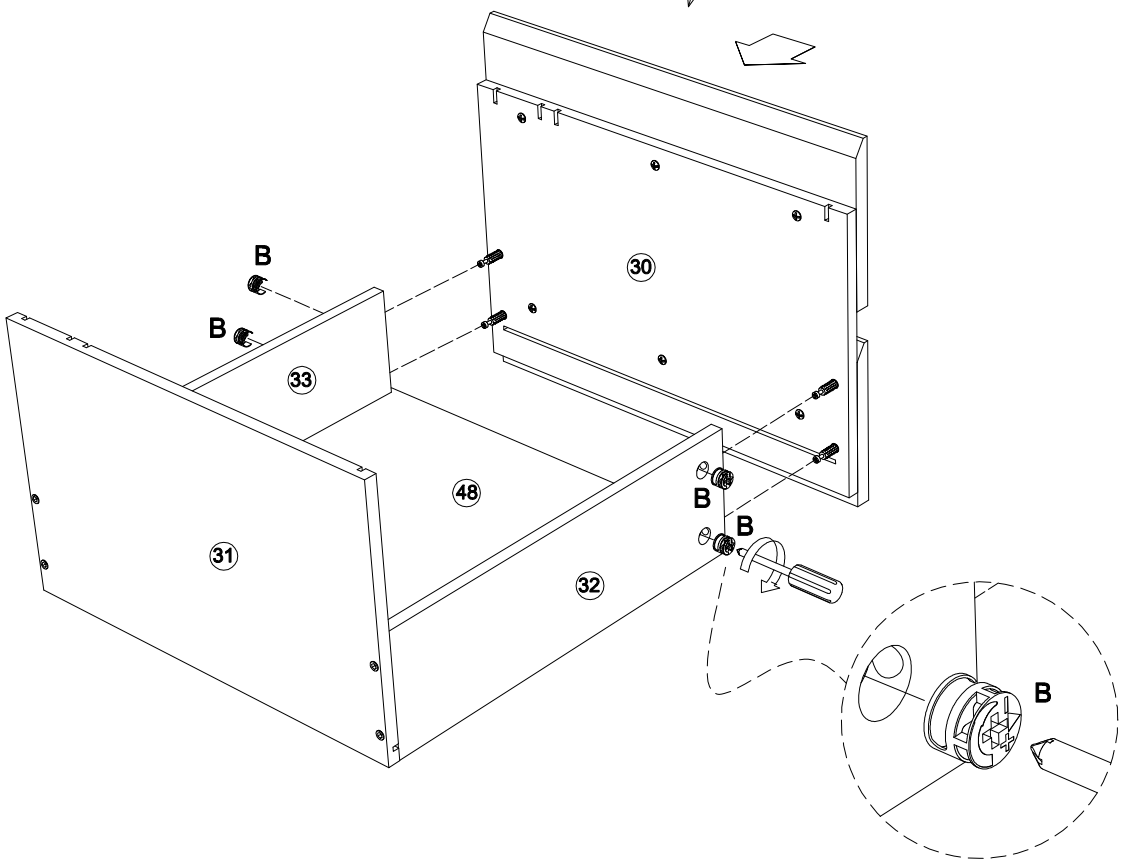

4 INSTALLATION / INSTALACIÓN

35 Parts needed
Piezas necesarias

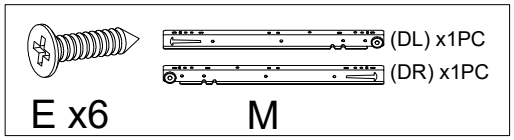

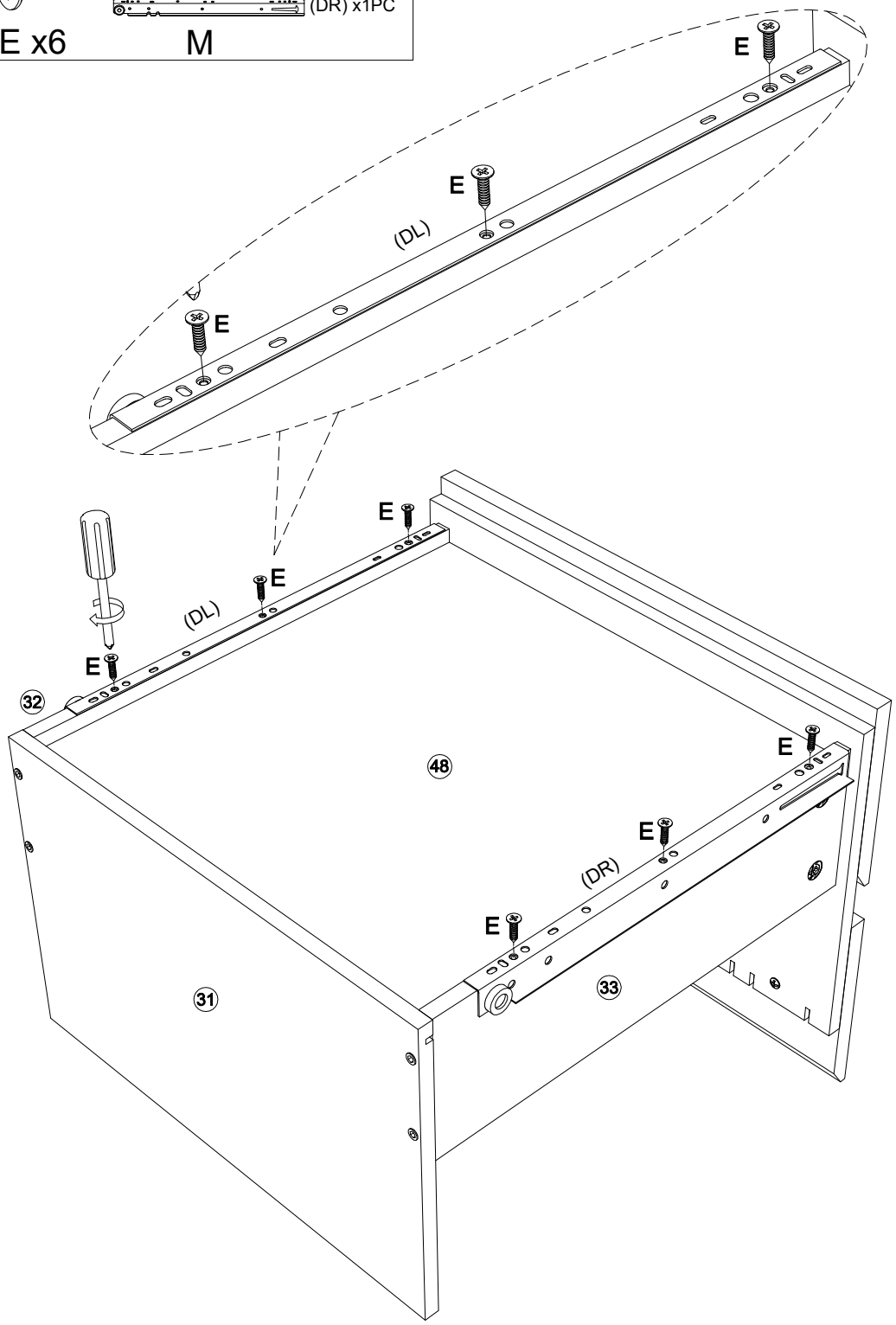

4 INSTALLATION / INSTALACIÓN

36 Parts needed
Piezas necesarias

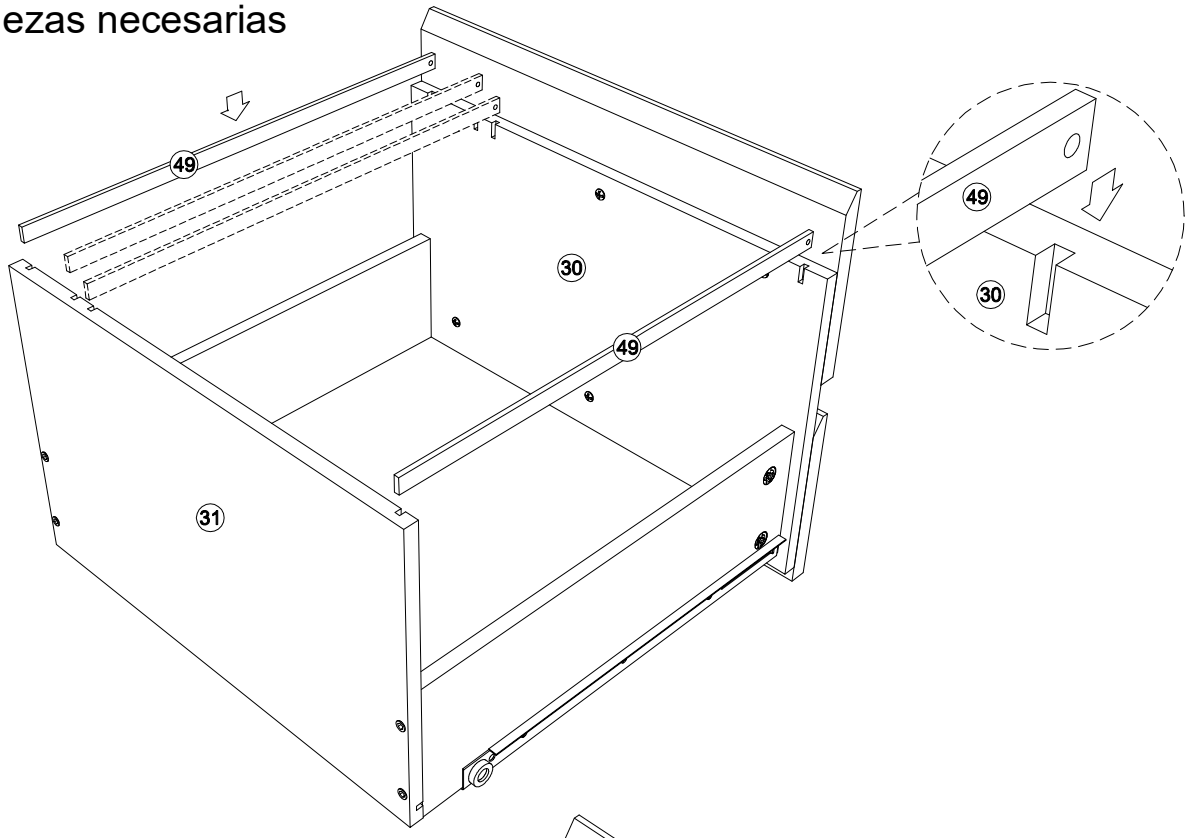

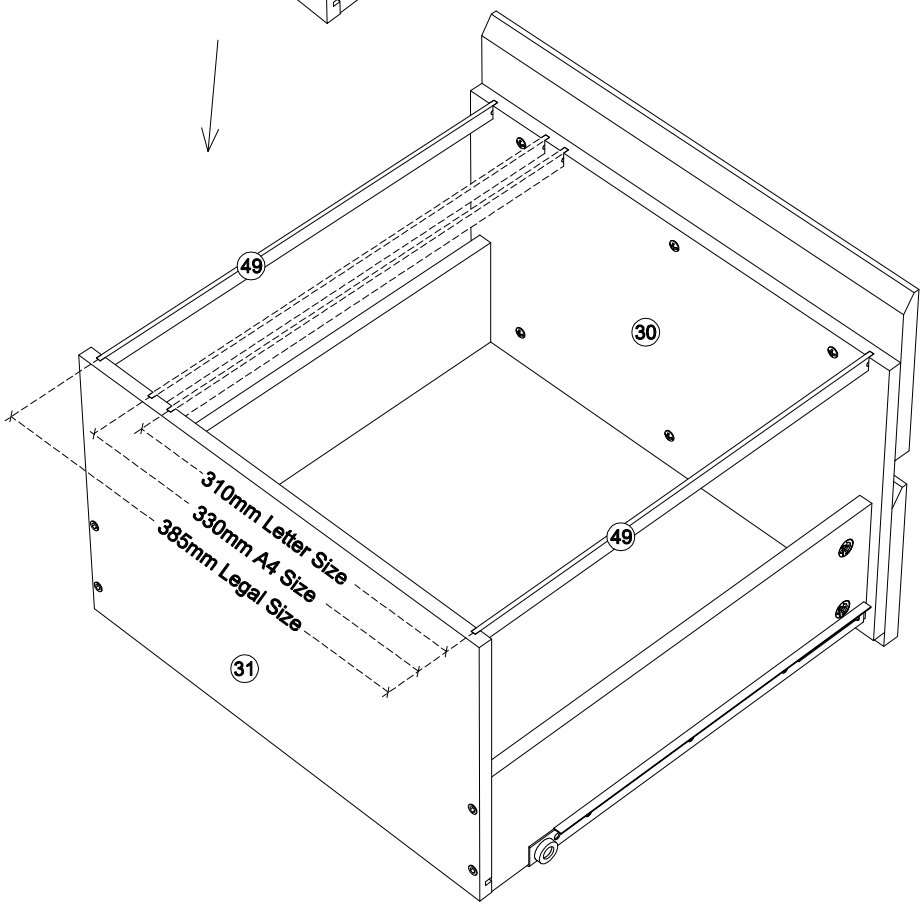

4 INSTALLATION / INSTALACION

37 Parts needed
Piezas necesarias

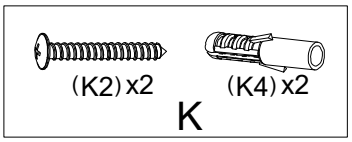

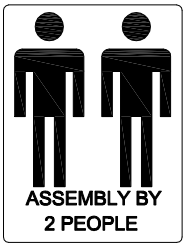



Attention: For safety and stability, we suggest you have to secure the anti-tip accessories to the wall to prevent tipping, injury, and property damage.

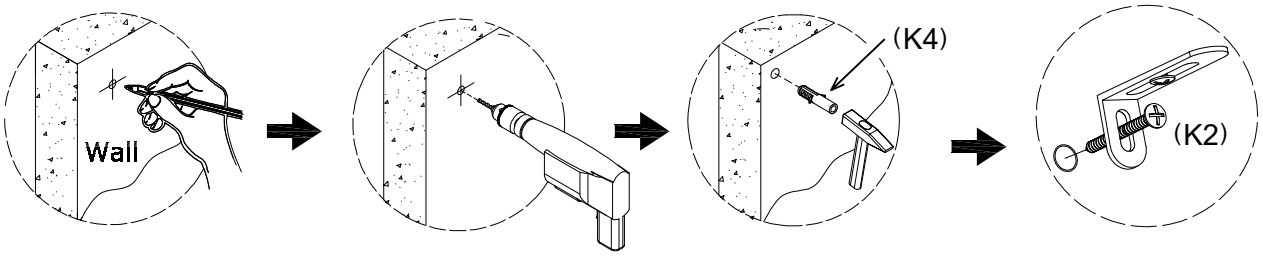

Fully tighten Screw # K1 after Screw # K2 tightened

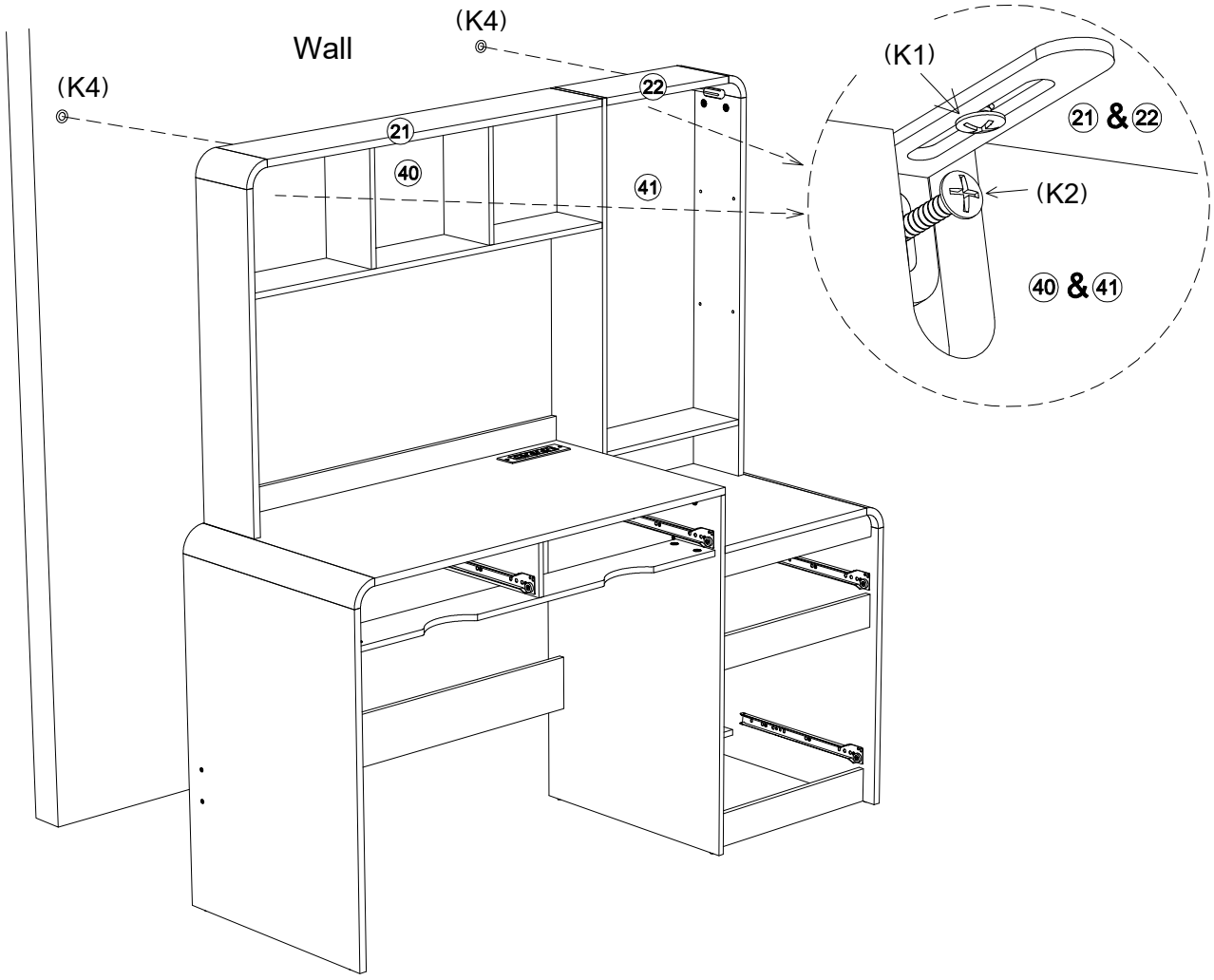

4 INSTALLATION / INSTALACIÓN

38 Parts needed
Piezas necesarias

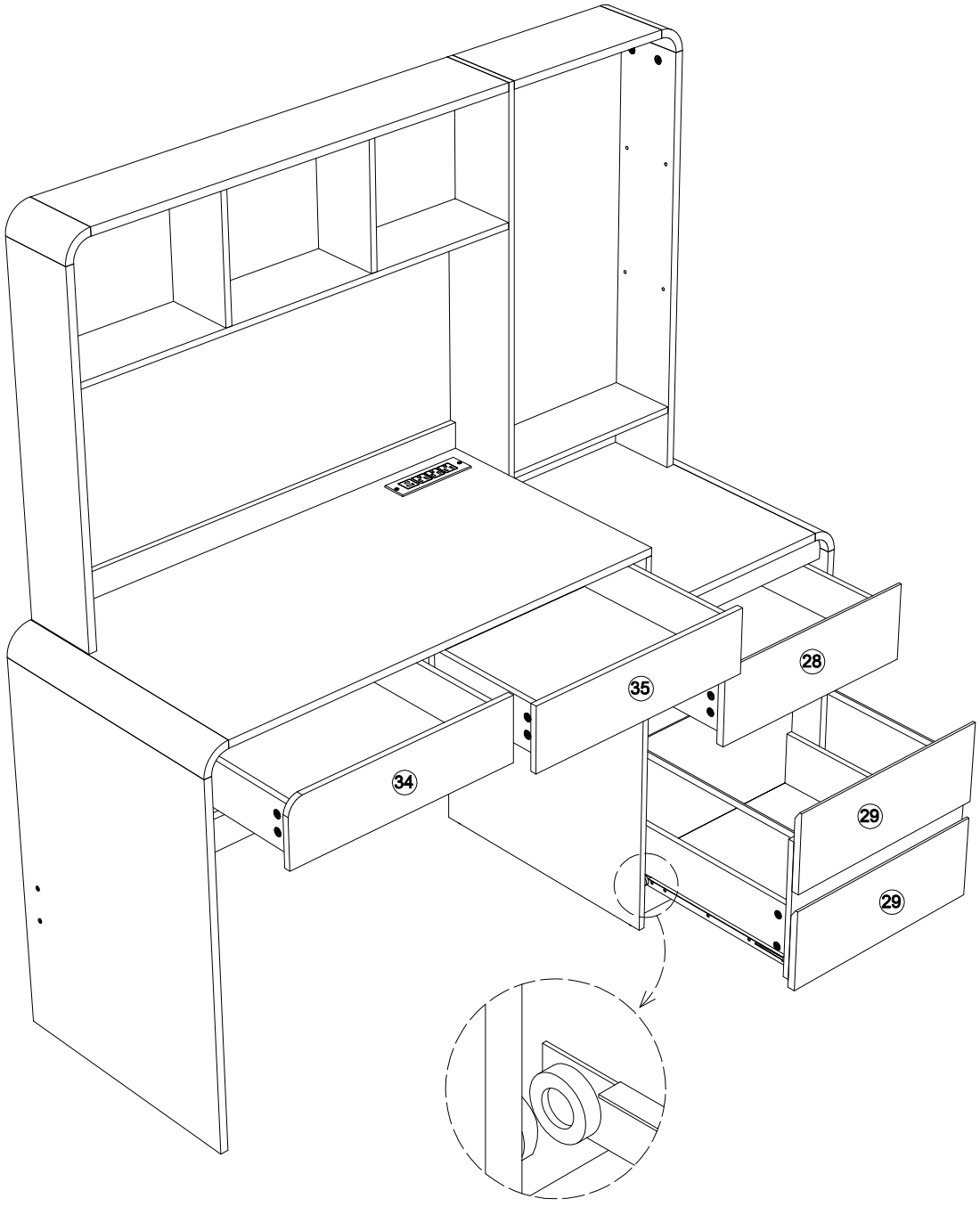

4 INSTALLATION / INSTALACION

39 Parts needed
Piezas necesarias

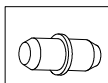

x8

5 MAINTENANCE

CARE AND MAINTENANCE

Like everything in life.there will be some care & maintenance that will be involved in Prolonging the beauty of our products.Frequent dusting of bath furniture will help maintain The luster finishi.Use a dry soft cotton cloth to dust.For cleaning,use a clean non-abrasive Slightly damp towe with warm water.Do not leave water on any wood parts.Do not use an All purpose cleaner or any cleaner not approved for paint or stain finish.Keep your furniture Out of sun.The temperature of the summer sun coming through a windwo can go above 140 Degrees.It will damage the fine finish,dry out ,and shrink the wood,which will cause cracks. Don`t place wood furniture near heating units or vents.Dry heat will cause the wood to dry And shrink,leaving cracks.

6 WARRANTY

ONE-YEAR LIMITED WARRANTY

This products is warranted to the original purchaset. If there is a failure in this unit due to Defects in materials or workmanship.the manufacturer will repair or replace this item at our Discretion without charge. Warranty is void if the product has been assembled incorrectly Misused or abused by overloading,altered in any way or damaged due to accident.This Warranty is not transferable and does not cover chipping.Flaking,scratches ,rust,dents,or Other damages to the surfaces of this product.The responsibility or the manufacturer is Is limited to repair or replacement of this product.The manufacturer is not responsible for Consequential,incidental,or other damages or losses resulting from product failure