Model No.: DY1085-5B/48

Ceiling Fan

Installation Manual

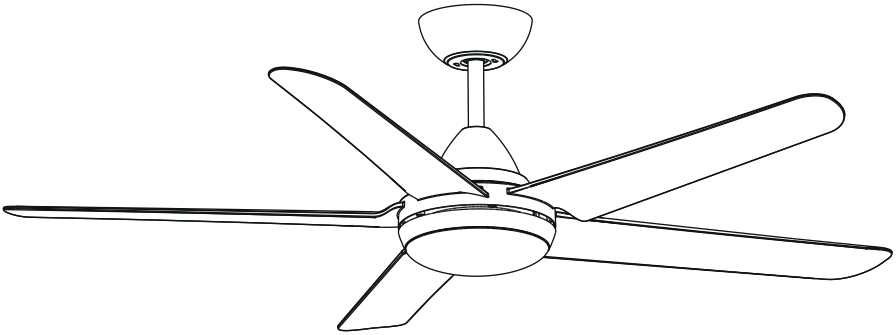

THANK YOU

We appreciate the trust and confidence you have placed in us through the purchase of this ceiling fan.We strive to continually create quality products designed to enhance your home.Thank you for choosing us!

Visit www.pmwfan.com for further assistance.

Warranty

The manufacturer warrants the fan motor to be free from defects in workmanship and material present at time of shipment from the factory for a period of lifetime after the date of purchase by the original purchaser. The manufacturer warrants the light kit (excluding any glass), to be free from defects in workmanship and material at the time of shipment from the factory for a period of three years after the date of purchase by the original purchaser. The manufacturers also warrants that all other fan parts, excluding any glass or acrylic blades, to be free from defects in workmanship and material at the time of shipment from the factory for a period of one year after the date of purchase by the original purchaser. We agree to correct such defects without charge or at our option replace with a comparable or superior model if the product is returned. To obtain warranty service, you must present a copy of the receipt as proof of purchase. All costs of removing and reinstalling the product are your responsibility. Damage to any part such as by accident, misuse, improper installation or by affixing any accessories, is not covered by this warranty. Because of varying climatic conditions this warranty does not cover any changes in brass finish, including rusting, pitting, corroding, tarnishing or peeling. Brass finishes of this type give the longest useful life when protected from varying weather conditions. A certain amount of “wobble” is normal and should not be considered a defect. Servicing performed by unauthorized persons shall render the warranty invalid. There is no other express warranty. We hereby disclaim any and all warranties, including but not limited to those of merchantability and fitness for a particular purpose to the extent permitted by law. The duration of any implied warranty which cannot be disclaimed is limited to the time period as specified in the express warranty. Some states do not allow limitation on how long an implied warranty lasts, so the above limitation may not apply to you. The retailer shall not be liable for incidental, consequential, or special damages arising out of or in connection with product use or performance except as may otherwise be accorded by law. Some states do not allow the exclusion of incidental or consequential damages, so the above exclusion or limitation may not apply to you.

This warranty gives specific legal rights, and you may also have other rights which vary from state to state.

This warranty supersedes all prior warranties. Shipping costs for any return of product as part of a claim on the warranty must be paid by the customer.

Pre-Installation

Tools Needed

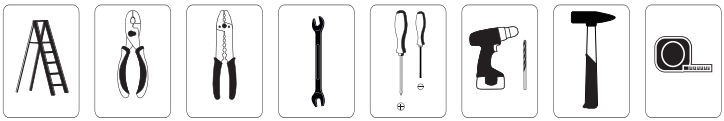

Installation kit

AA

BB

CC

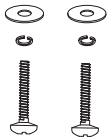

DD

Part	Description	Quantity
AA	Blade washer	1
BB	Wire nut	6
CC	Screws A	2
DD	Screws B	2

Blade balancing kit

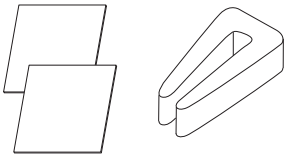

Pre-Installation

Specification

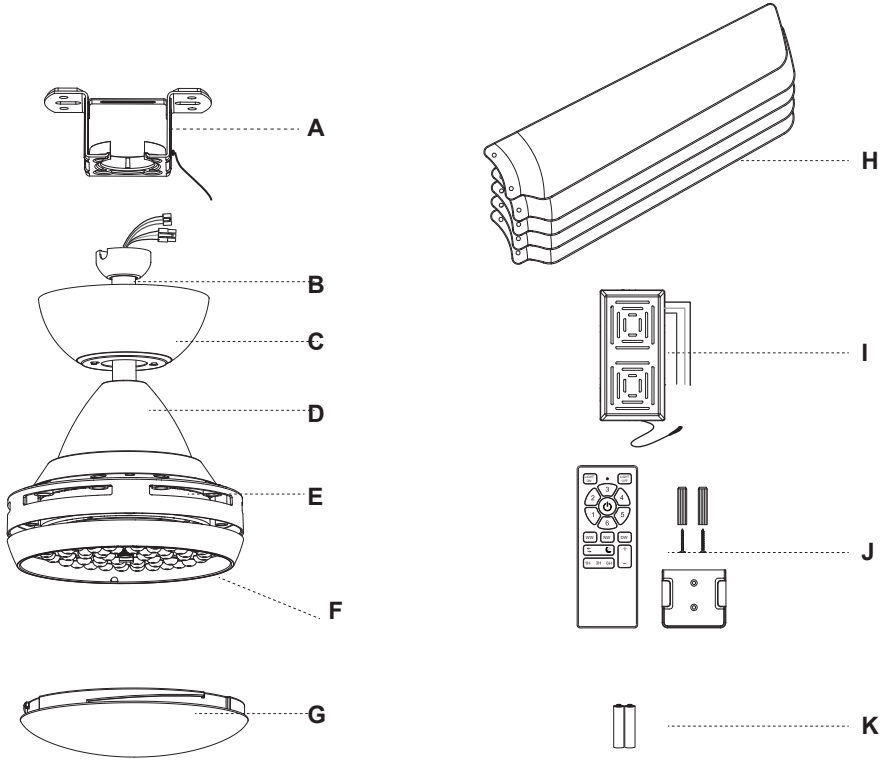

Part	Description	Quantity
A	Bracket	1
B	Down rod	1
C	Canopy	1
D	Coupling cover	1
E	Body/motor	1
F	Light kit	1
G	Light cover	1
H	Blades	5

Part	Description	Quantity
I	Receiver	1
J	Transmitter	1
K	Battery	2

Ceiling Fan

Questions, problems, missing parts? Before returning to the store, visit www.pmwfan.com for further assistance.

Retain this manual for future use.

Manufacturer: Zhongshan Miaowang Electrical Appliance Co., Ltd.

Address: Building C, No.10, Qingfu Road, Henglan Town, Zhongshan City, Guangdong Province,CN

Website: www.pmwfan.com

Tech Support Telephone: +12092272409

Tech Support Email Address: support@pmwfan.com

GC00101431WE A0