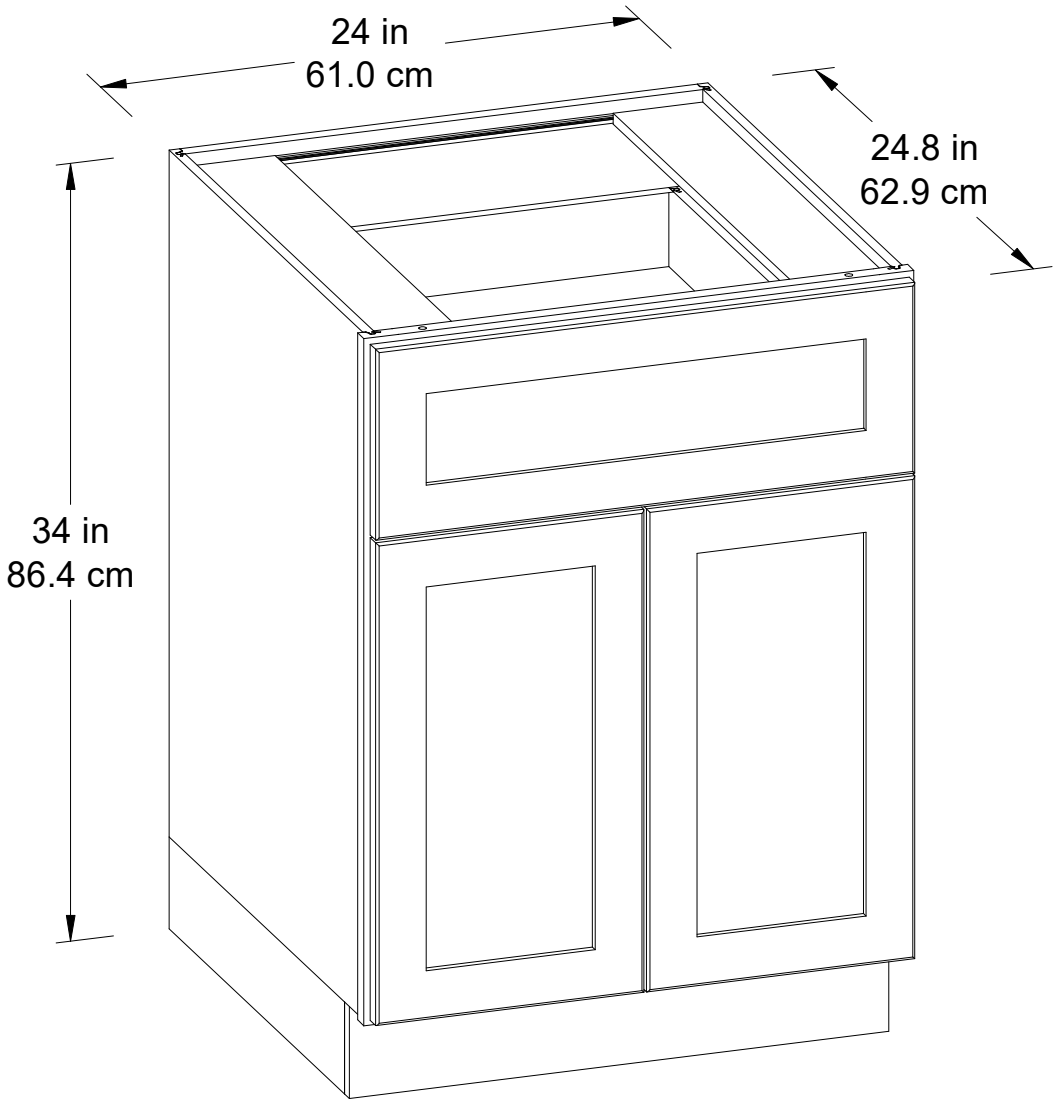
24 in
61.0 cm
24.8 in
62.9 cm
34 in
86.4 cm