DIMENSIONS

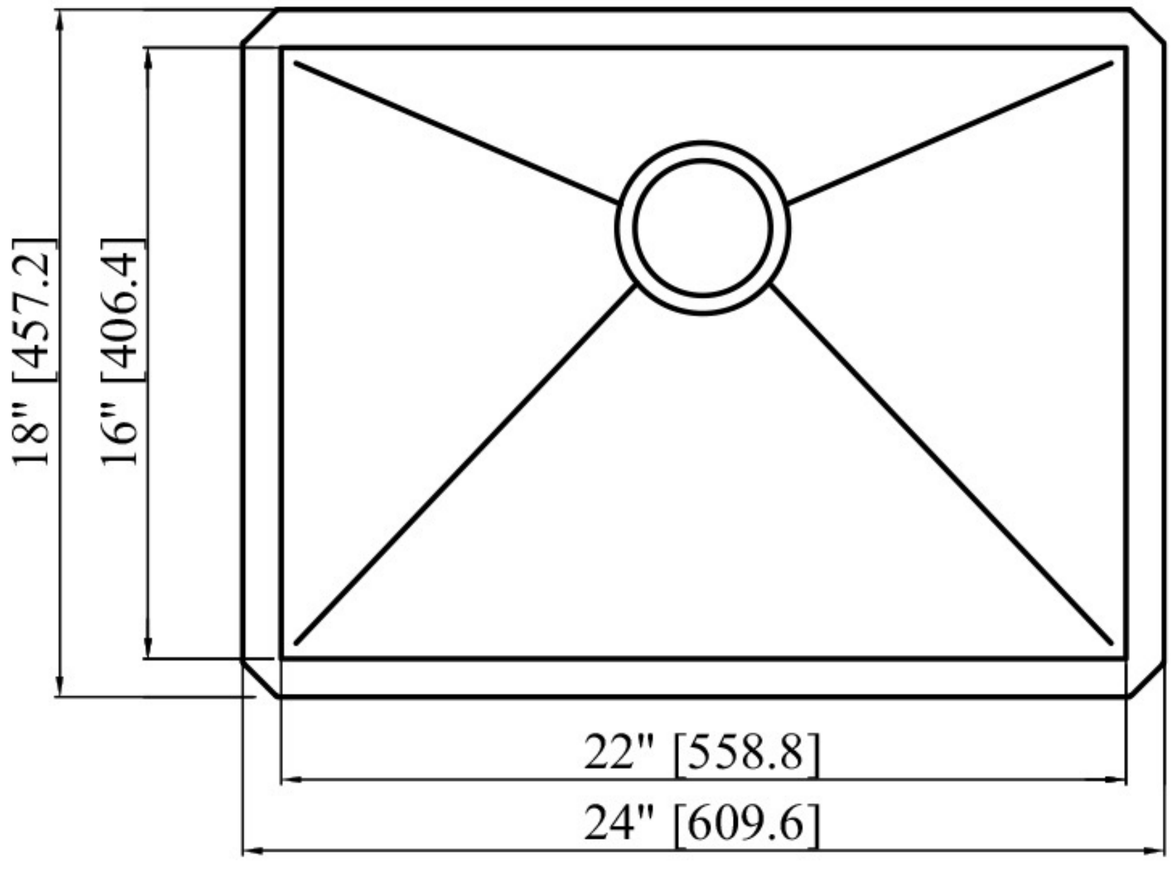

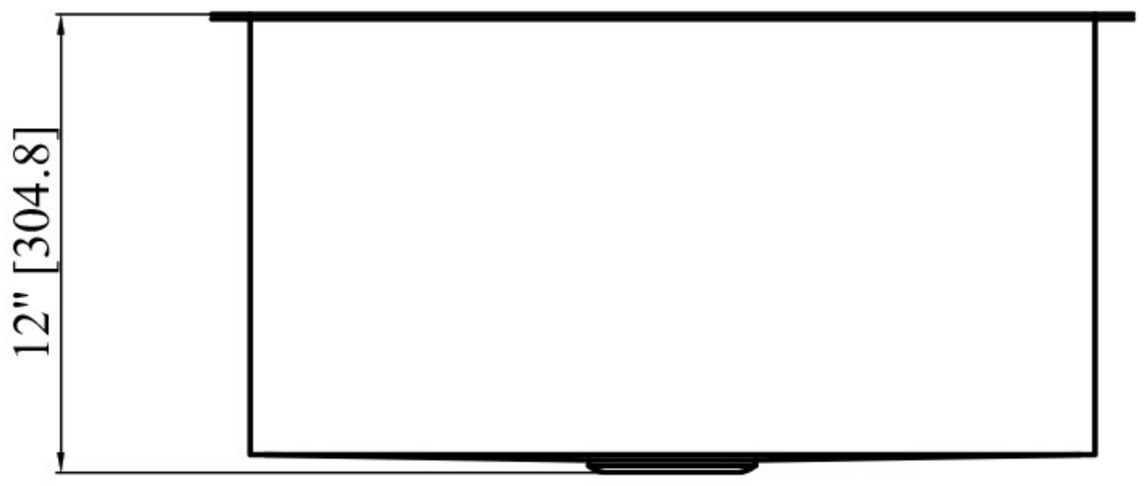

External Dimensions: 24"L x 18"W x12"H
Interior Dimensions: 22"L x 16"W x 11.75"H
Cabinet Opening Dimensions: 22"L x 16"W
Minimum cabinet base size required : 27”

STANDARD 3.5" DRAIN OPENING IS AVAILABLE TO INSTALL GARBAGE DISPOSAL UNIT