Twin Handles Wall Mount Bathroom Faucet

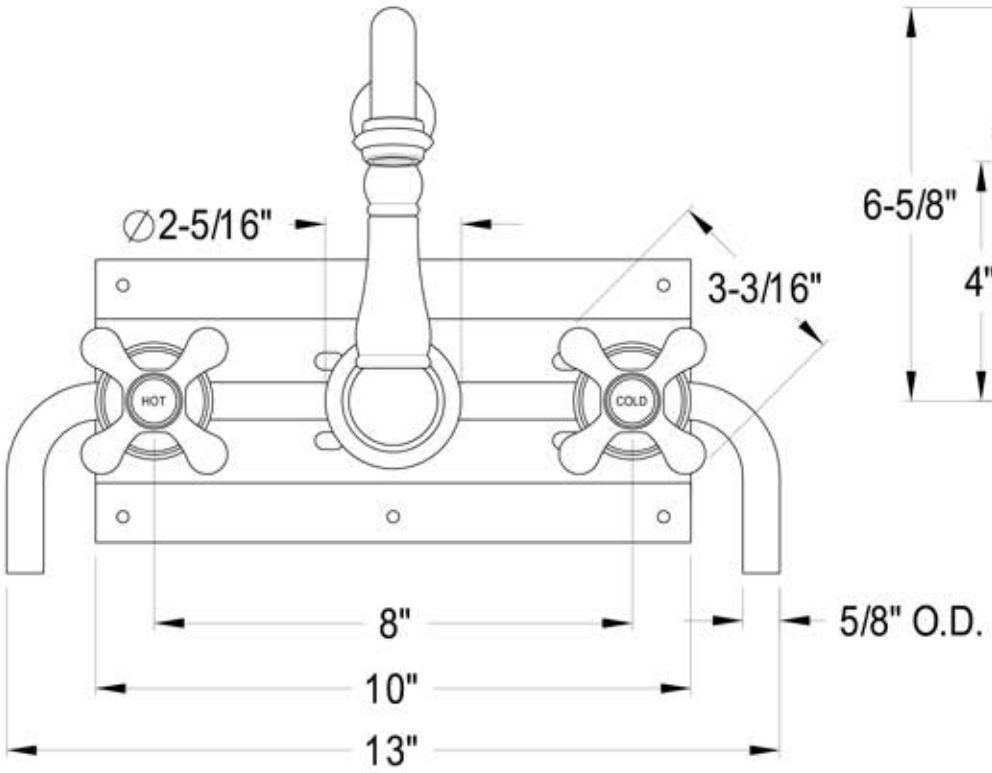

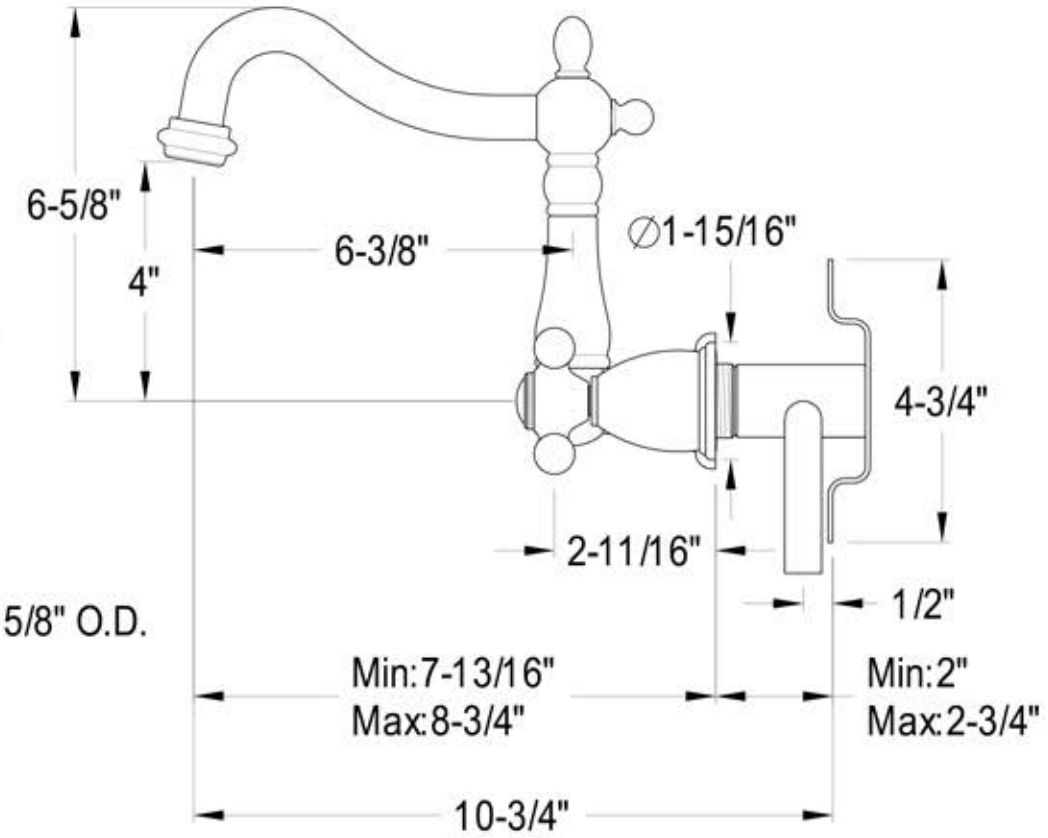

| 2018-07-B