66" Cast Iron Clawfoot Tub

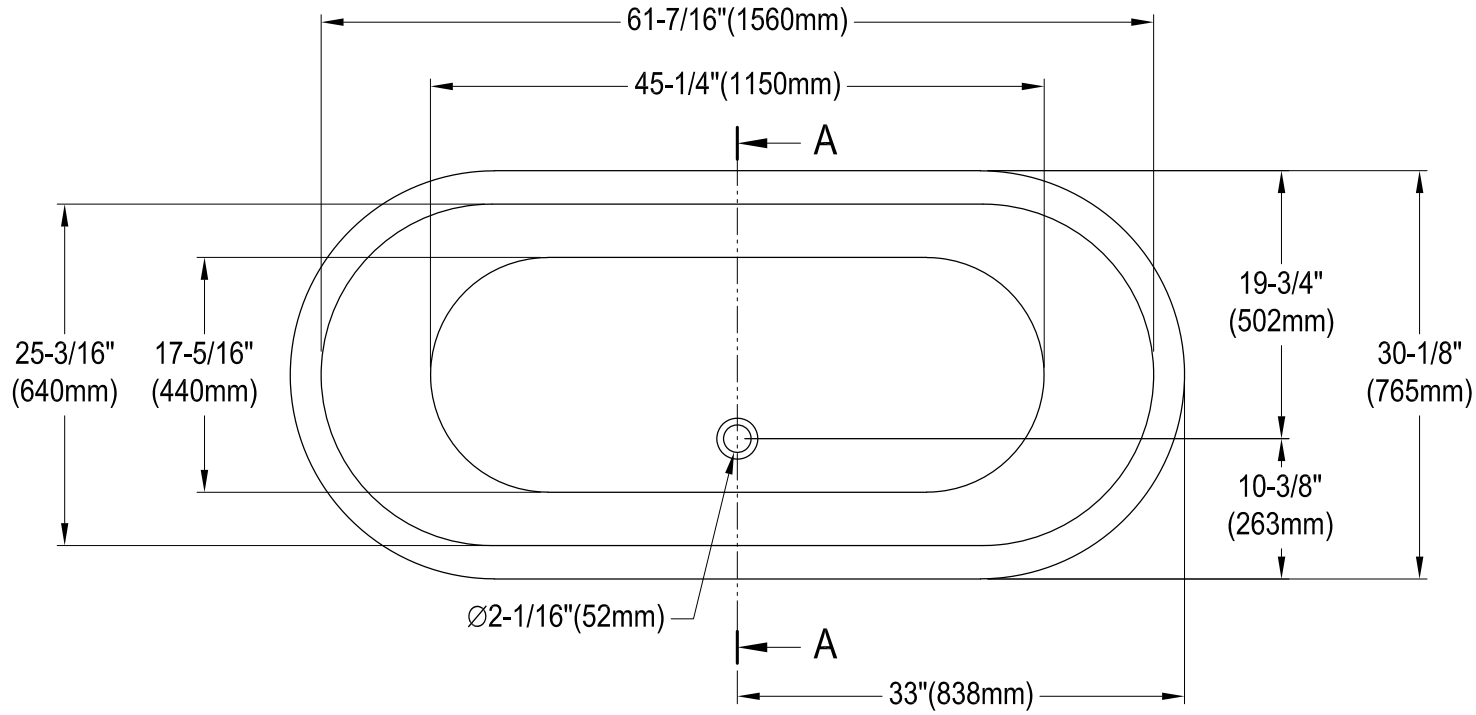

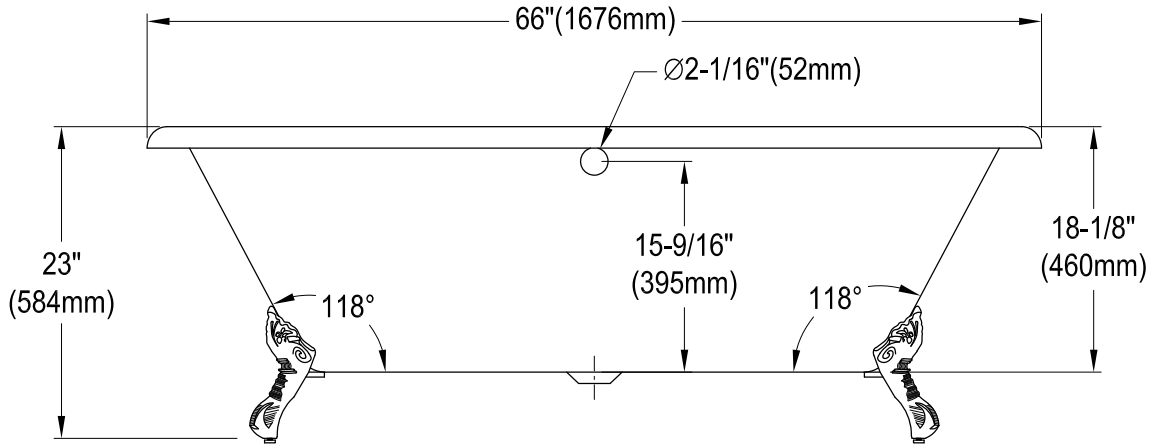

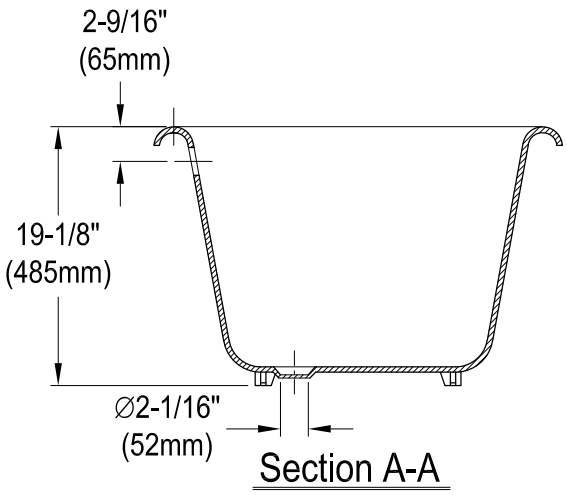

Section A-A

2020-05-F