| | |
|---|---|
| Brand | hansgrohe |
| Art. Name | Soap Dispenser, Focus |
| Art. Nr. | 40438001 |
| Surface | Chrome |
| Pos. | 1 |

## Product Picture

## Drawing

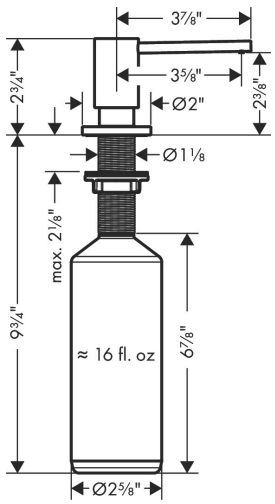


## Features

- Metal
- Non-corroding spout tube
- Filling capacity 500 ml
- 2⅛″ maximum counter depth

| | |
|---|---|
| Brand | hansgrohe |
| Art. Name | Soap Dispenser, Focus |
| Art. Nr. | 40438001 |
| Surface | Chrome |
| Pos. | 1 |

**Spare Parts Drawings for build year: >01/19**

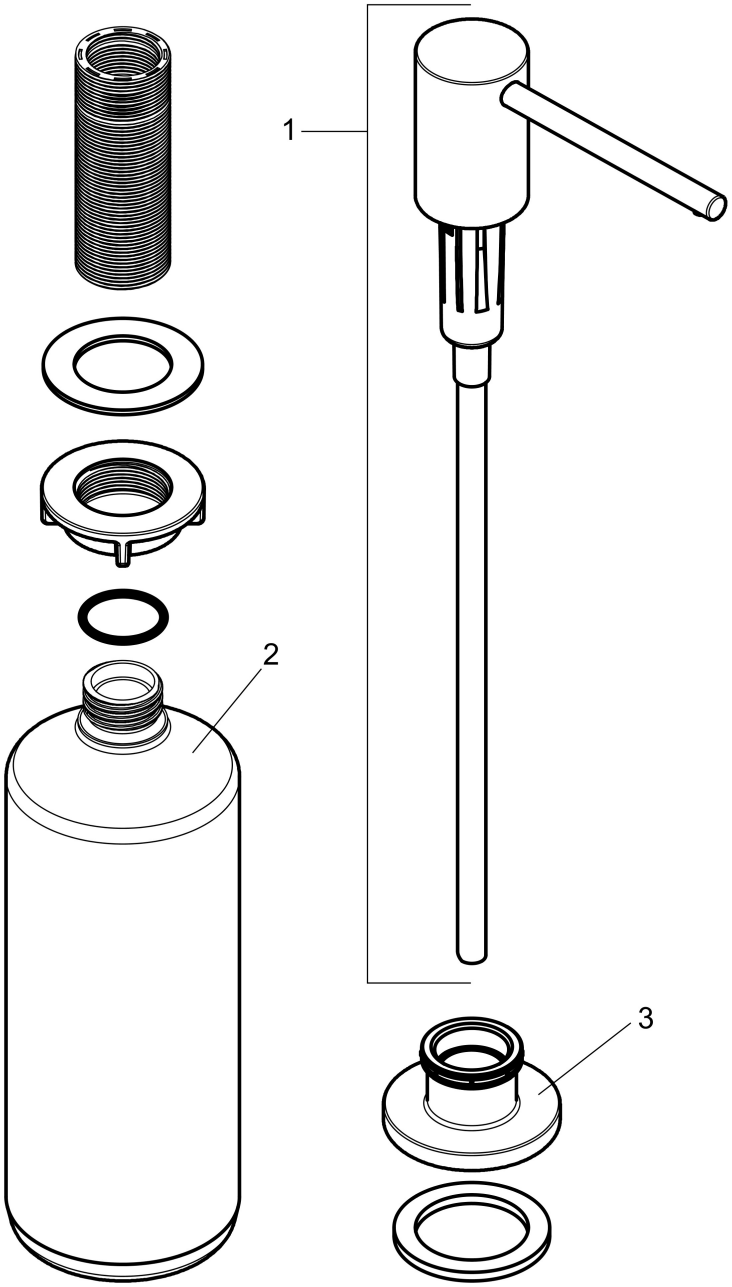

| | |
|---|---|
| Brand | hansgrohe |
| Art. Name | Soap Dispenser, Focus |
| Art. Nr. | 40438001 |
| Surface | Chrome |
| Pos. | 1 |

**Spare parts list for build year: >01/19**

| Pos. | Description | Article number |
|---|---|---|
| 1 | pump | 93281000 |
| 2 | bottle for lotion dispenser | 93278000 |
| 3 | escutcheon | 93282000 |