36" x 22" Carrara Marble Vanity Top With Brass Feet Combo

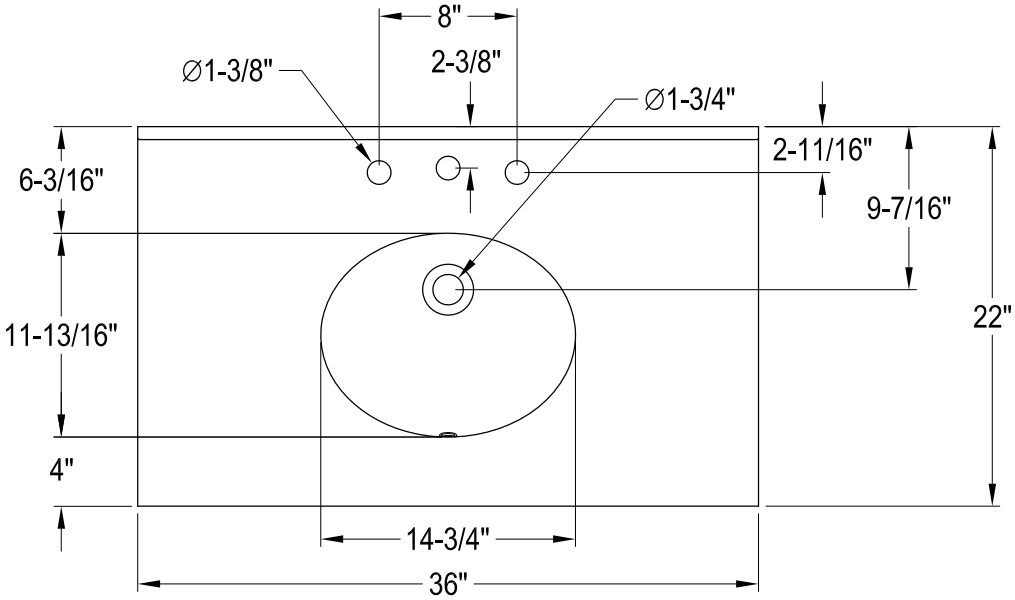

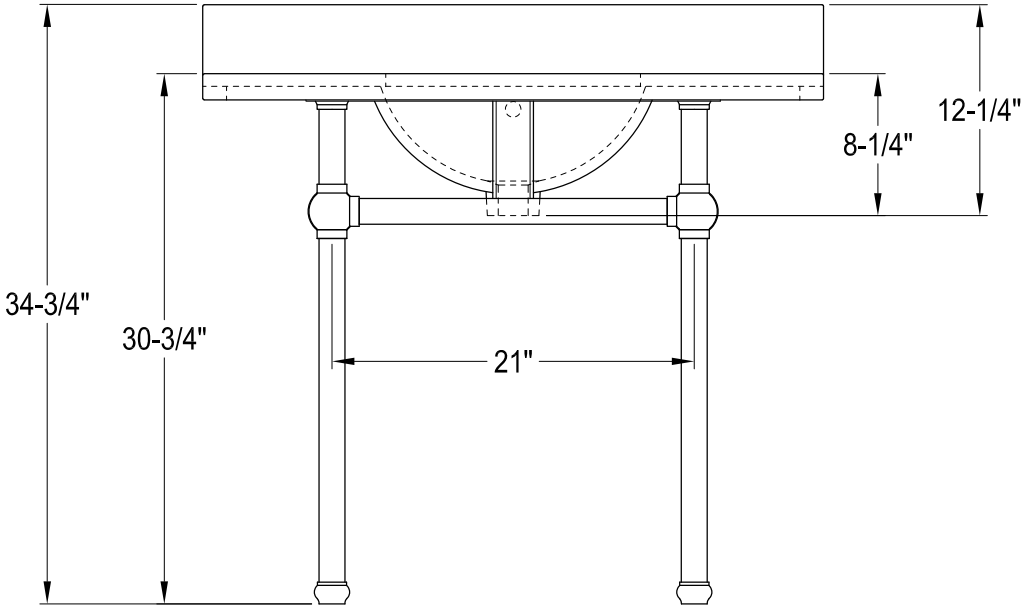

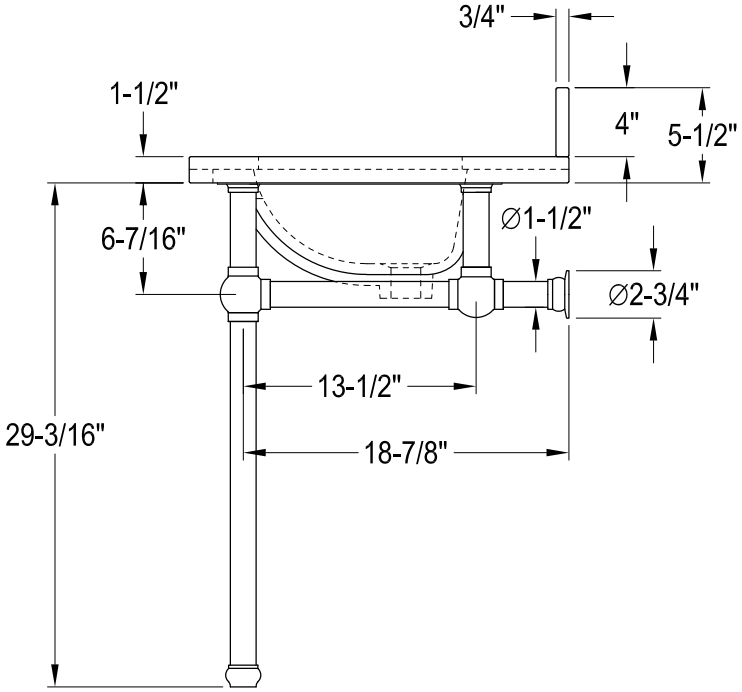

2020-06-A