Arris™ Accessories Technical Specification

Magnifying Mirror YB0892

Stock Numbers:

- **YB0892BN – Magnifying Mirror**
  Brushed Nickel Finish
- **YB0892CH – Magnifying Mirror**
  Chrome Finish
- **YB0892BL – Magnifying Mirror**
  Matte Black Finish

Dimensions:

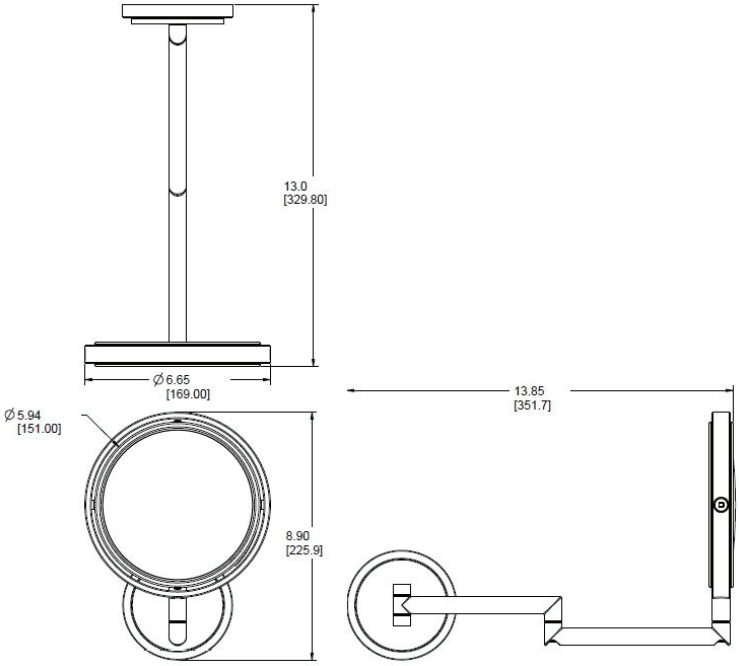

Materials:

Mirror base, arms and ring are constructed of zinc.

Installation Instructions:

1. Remove the mounting plate frmo the body by loosening the setscrew.
2. Position the mounting plate on the wall in the desired location and mark holes.
3. Drill 1/2" pilot holes in marked locations.
4. Unthread mounting screws from two toggle anchors and thread through mounting plate holes. CAUTION: Be sure the toggle anchors are partially threaded onto the screws and positioned so the toggle collapses when pushed through the predrilled pilot holes. While hollding mounting plate (with screws and toggles installed), push both toggle anchors through predrilled pilot holes.
5. Tighten both screws until tight.
6. Place mirror assembly over the mounting plate with setscrew down. Tighten setscrew.

Cleaning Instructions:

To preserve the fine finish of this product, clean only with a soft damp cloth. Dry well. Do not use commercial or abrasive cleaners.

Stock Number: _____ Magnifying Mirror
By Moen Incorporated

MOEN®

25300 AL MOEN DRIVE • NORTH OLMSTED, OH 44070
CORPORATE HEADQUARTERS: (800) 321-8809 • FAX: (800) 848-6636
INTERNATIONAL: (440) 962-2000 • FAX: (440) 962-2726
CUSTOMER SERVICE (USA): 800-882-0116 • FAX: (888) 379-2720
WWW.MOEN.COM
© Copyright Moen Incorporated

01/17/2019 BA1721 5000001459A4
Rev.Date:04/14