Specs sheet: **SHOE RAIL**

Dimensions:

SKU	W	H
TRC-A-10XX-LC-SG13-16	15 3/8” 390mm	1 7/8” 48mm
TRC-A-10XX-LC-SG13-18	16 7/8” 428mm	1 7/8” 48mm
TRC-A-10XX-LC-SG13-24	22 7/8” 581mm	1 7/8” 48mm
TRC-A-10XX-LC-SG13-30	28 7/8” 733mm	1 7/8” 48mm

Two 16” units can be used for 36” shoe shelves

Key Features:

- Compatible With: Angled or flat shoe shelves.
- Mounting Type: Bottom-mounted rail with press-fit pins.
- Installation Requirement: Drill 5 mm holes to a depth of 9–10 mm.

Materials & Finishes:

Powder-coated steel, available in Chrome, Satin Metal, and Matte Black finishes.
Rust resistant finish for long term use

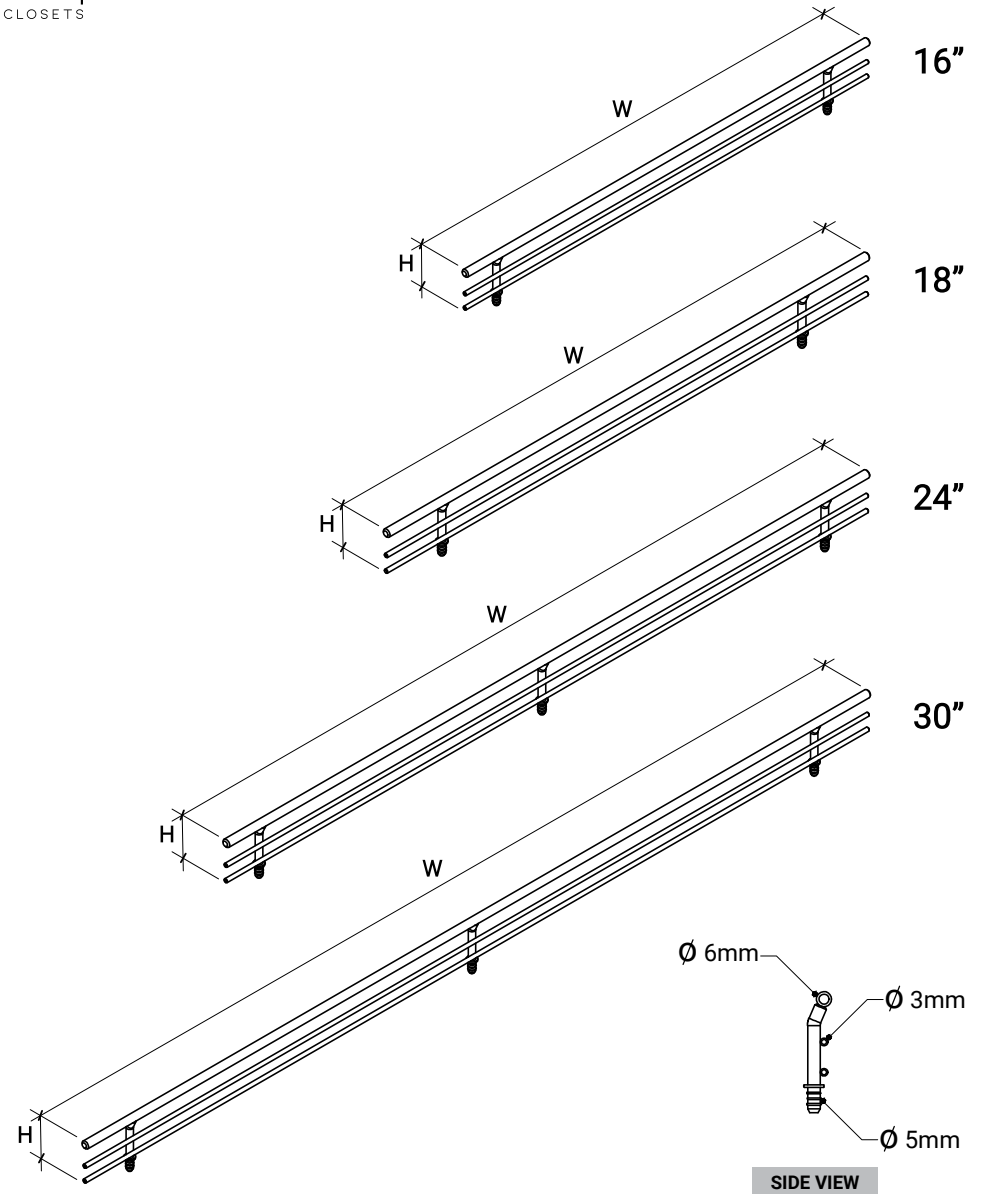

© Via Closets LLC. All rights reserved. Unauthorized reproduction, distribution, or use of this document is strictly prohibited. Disclosure to third parties or use for unauthorized purposes is forbidden. Violators will be prosecuted.
This document and product are protected by copyright and pending design and utility patent applications.