ITEM #6838215
MODEL #AD52BNK3LR

ARONDALE LED CEILING FAN

Español p. 19

ATTACH YOUR RECEIPT HERE

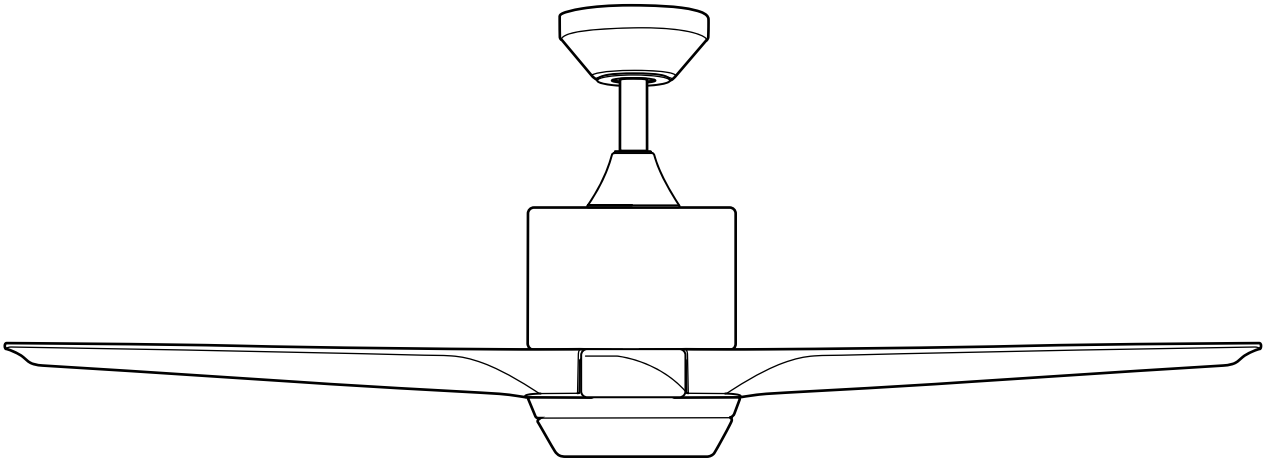

4007498

Purchase Date _____

Questions, problems, missing parts?
Before returning, contact us on:
800-527-1292, 8:30 a.m. - 5 p.m., CST, Monday - Friday.

TABLE OF CONTENTS

Safety Information 2

Package Contents 5

Hardware Contents 6

Preparation 6

Initial Installation 6

Wiring 10

Final Installation 12

Operating Instructions 14

Care and Maintenance 16

Troubleshooting 17

Limited Lifetime Warranty 18

Replacement Parts List 18

SAFETY INFORMATION

CAUTION: Changes or modifications not approved by the party responsible for compliance could void the user's authority to operate the equipment.

***NOTE**: This equipment has been tested and found to comply with the limits for a Class B digital device, pursuant to Part 15 of the FCC Rules. These limits are designed to provide reasonable protection against harmful interference in a residential installation. This equipment generates, uses and can radiate radio frequency energy and, if not installed and used in accordance with the instructions, may cause harmful interference to radio communications. However, there is no guarantee that interference will not occur in a particular installation. If this equipment does cause harmful interference to radio or television reception, which can be determined by turning the equipment off and on, the user is encouraged to try to correct the interference by one or more of the following measures:

* Reorient or relocate the receiving antenna.
* Increase the separation between the equipment and receiver.
* Connect the equipment into an outlet on a circuit different from that to which the receiver is connected.

Consult the dealer or an experienced radio/TV technician for help.

The device complies with Part 15 of the FCC Rules. Operation is subject to the following two conditions: (1) this device may not cause harmful interference, (2) this device must accept any interference received, including interference that may cause undesired operation.

Distributed by: Litex Industries Inc., P.O. Box 535639, Grand Prairie, TX, 75050; 800-527-1292

NOTE: Dimmable to 10%.

SAFETY INFORMATION

READ AND SAVE THESE INSTRUCTIONS

Please read and understand this entire manual before attempting to assemble, install or operate the product. Review the accompanying assembly diagrams.

- Do not discard fan carton or inserts. Should this fan need to be returned to the factory for repairs, it must be shipped in its original packaging to ensure proper protection against damage that might exceed the initial cause for return.
- Make sure all electrical connections comply with local codes, ordinances, the National Electrical Code and ANSI/NFPA 70-1999. Hire a qualified electrician or consult a do-it-yourself wiring handbook if you are unfamiliar with installing electrical wiring.
- Make sure the installation site you choose allows a minimum clearance of 7 ft. from the blades to the floor and at least 30 in. from the end of the blades to any obstruction.
- After you install the fan, make sure all connections are secure to prevent the fan from falling.
- The net weight of this fan including the light kit is: 18.7 lbs.

⚠ DANGER

When using an existing outlet box, make sure the outlet box is securely attached to the building structure and can support the full weight of the fan. Failure to do this can result in serious injury or death. The stability of the outlet box is essential in minimizing wobble and noise in the fan after installation is complete.

To reduce the risk of serious bodily injury, DO NOT use power tools to assemble any part of the fan.

Before proceeding, be sure to shut off electricity at main switch or circuit breaker in order to avoid electrical shock.

⚠ WARNING

To reduce the risk of fire, electrical shock or personal injury, mount fan to outlet box marked "ACCEPTABLE FOR FAN SUPPORT OF 35 LBS. OR LESS" and use mounting screws provided with the outlet box. Most outlet boxes commonly used for the support of lighting fixtures are not acceptable for fan support and may need to be replaced. Consult a qualified electrician if in doubt.

When mounting fan to a ceiling outlet box, use a METAL octagonal outlet box; do NOT use a plastic outlet box. Secure the outlet box directly to the building structure. The outlet box and its support must be able to support the moving weight of the fan (at least 35 lbs.).

To reduce the risk of fire, electrical shock or personal injury, lever wire connectors provided with this fan are designed to accept only one 12-gauge house wire and one lead wire from the fan. If your house wire is larger than 12-gauge or there is more than one house wire to connect to the corresponding fan lead wires, consult an electrician for the proper size lever wire connectors to use.

SAFETY INFORMATION

⚠ WARNING

To avoid personal injury, the use of gloves may be necessary while handling fan parts with sharp edges.

To reduce the risk of fire or electrical shock, do not use the fan with any solid state speed control device or control fan speed with a full range dimmer switch.

To reduce the risk of fire, electrical shock or personal injury, do not bend the blades when installing them or when cleaning the fan. Do not insert objects between the rotating fan blades.

To reduce the risk of personal injury, use *only* parts provided with this fan. The use of parts *OTHER* than those provided with this fan will void the warranty.

⚠ CAUTION

Be sure outlet box is properly grounded and that a ground wire (GREEN or BARE) is present.

Once installation is complete, carefully check all screws, bolts and nuts on fan motor assembly to ensure that they are secured.

Do NOT tamper with or attempt to repair LED component. The light source is designed for this specific application and should not be serviced by untrained personnel. If any servicing is required, call our customer service department.

PACKAGE CONTENTS

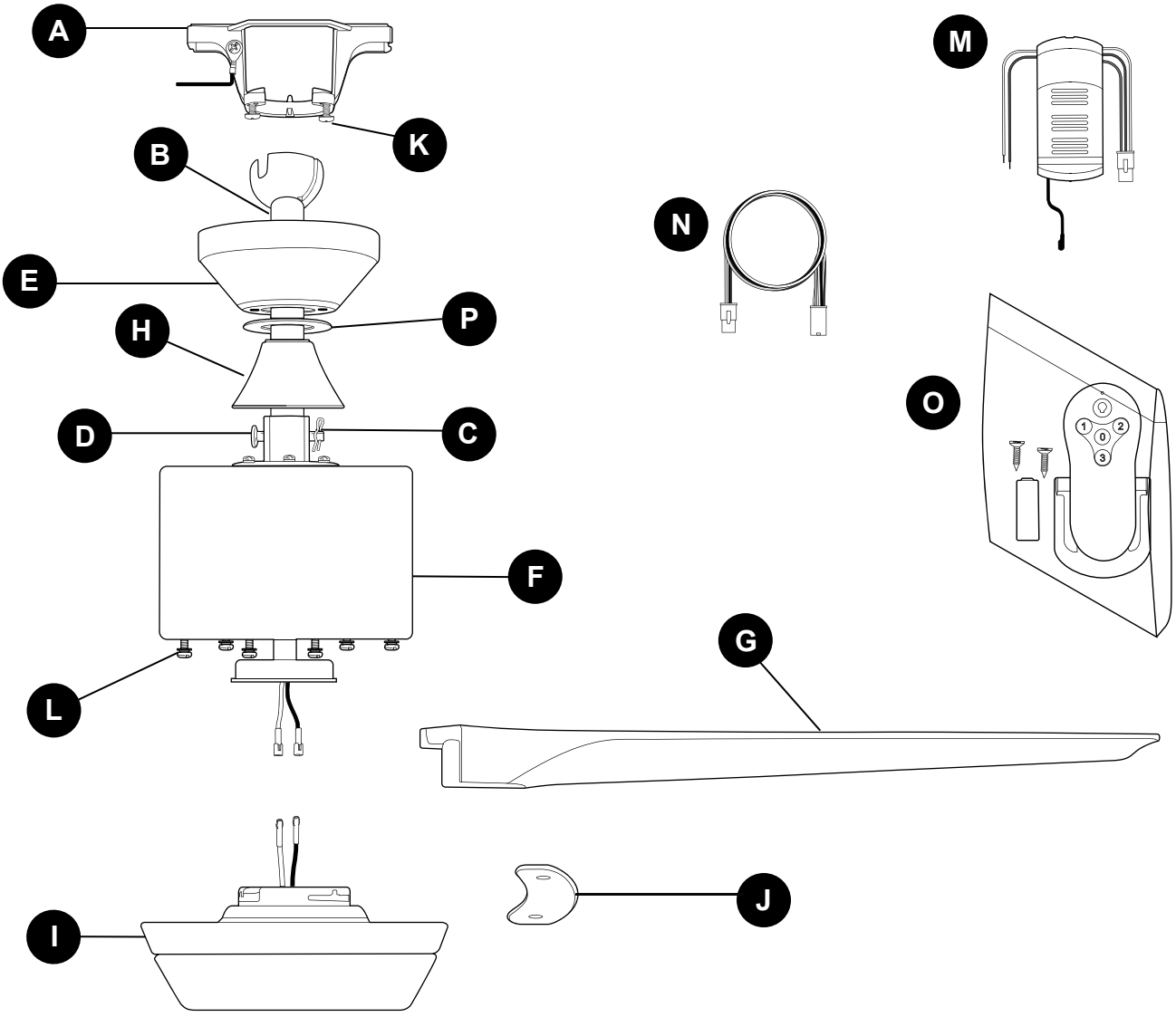

PART	DESCRIPTION	QUANTITY
A	Mounting Bracket	1
B	Downrod (preassembled)	1
C	Clip (preassembled)	1
D	Pin (preassembled)	1
E	Canopy (preassembled)	1
F	Motor Housing	1
G	Blade	3
H	Yoke Cover (preassembled)	1
I	LED Light Kit	1

PART	DESCRIPTION	QUANTITY
J	Blade Plate	3
K	Canopy Mounting Screw (preassembled)	2
L	Blade screw/lock washer (preassembled)	6
M	Remote Control Receiver	1
N	Additional Wiring	1
O	Remote Pack	1
P	Canopy Cover (preassembled)	1

IMPORTANT REMINDER: You must use the parts provided with this fan for proper installation and safety.

HARDWARE CONTENTS (shown actual size)

AA

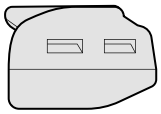

Lever Wire Connector

Qty. 3

BB

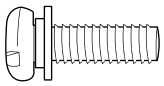

Blade Screw/ Lock Washer

Qty. 1 extra

PREPARATION

Before beginning assembly of product, make sure all parts are present. Place motor on carpet or on foam to avoid damage to finish. Compare parts with package contents list and hardware contents list. If any part is missing or damaged, do not attempt to assemble the product.

Estimated Assembly Time: 120 minutes

Tools Required for Assembly (not included): Electrical Tape, Phillips Screwdriver, Flathead Screwdriver, Pliers, Safety Glasses, Stepladder and Wire Strippers

Helpful Tools (not included): AC Tester Light, Tape Measure, Do-It-Yourself Wiring Handbook and Wire Cutters

INITIAL INSTALLATION

1. Turn off circuit breakers or fuse and wall switch to the fan supply line leads.

   ⚠ **DANGER**: Failure to disconnect power supply prior to installation may result in serious injury or death.

1

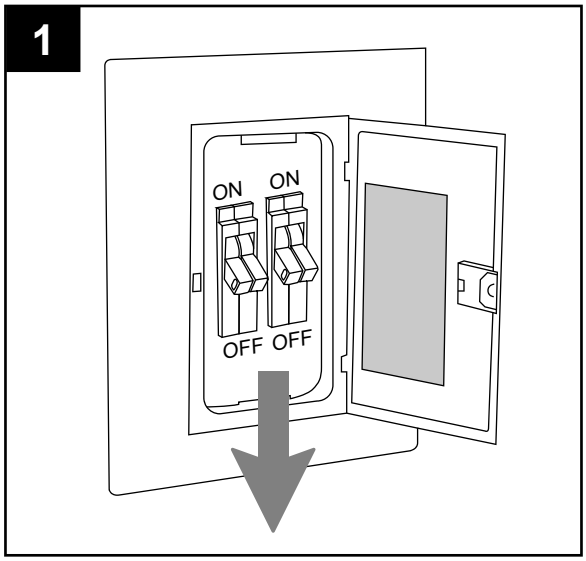

INITIAL INSTALLATION

2. If applicable, remove existing fan and fan parts, including the mounting bracket, from outlet box and disconnect all electrical wiring.

   ⚠ **WARNING:** To reduce the risk of personal injury, use *ONLY* parts provided with your new fan. The use of parts *OTHER* than those provided with this fan will void the warranty.

   Set aside screws, spring washers and flat washers provided with the outlet box for fan installation.

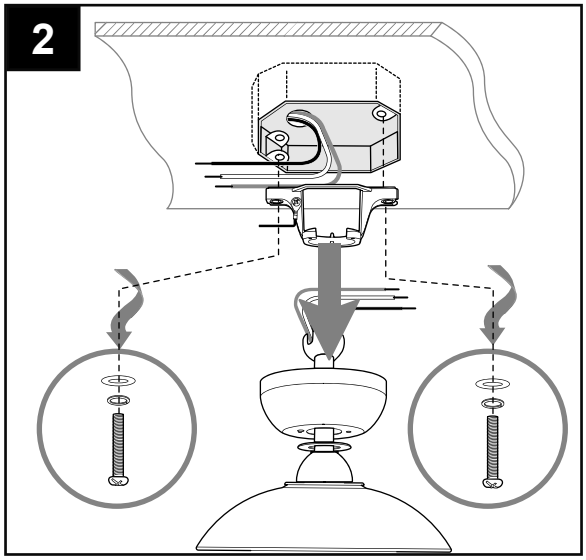

3. Determine mounting method to use for new fan.
   A. Standard mount
   B. Angle mount

   IMPORTANT: If using the angle mount, ensure the ceiling angle is not steeper than 19°.

   NOTE: Closemount option is not available for this fan.

   ***Helpful Hint:** Downrod-style mounting is best suited for ceilings 8 ft. high or higher. For taller ceilings you may want to use a longer downrod (not included). Angle-style mounting is best suited for angled or vaulted ceilings. A longer downrod is sometimes necessary to ensure proper blade clearance.

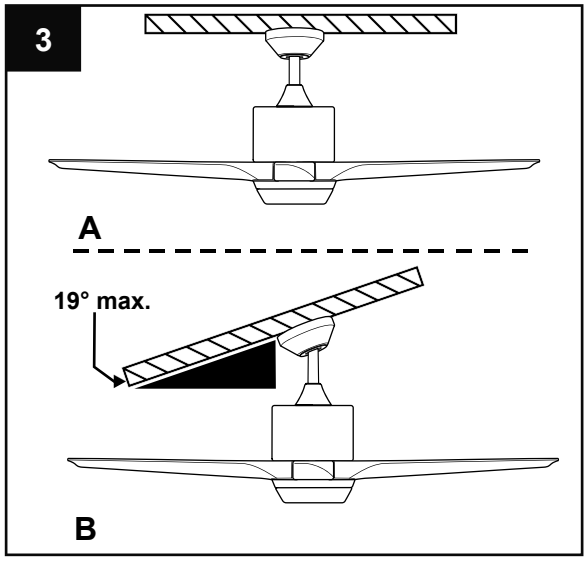

4. Check to make sure blades (G) will be at least 30 in. from any obstruction and at least 7 ft. above the floor.

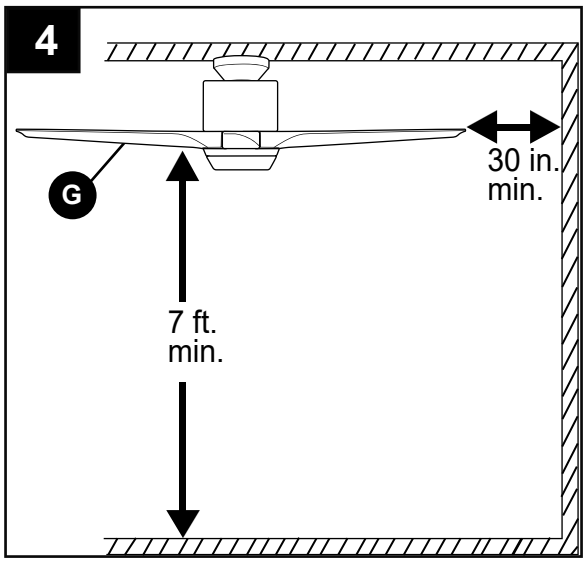

INITIAL INSTALLATION

5. ***If attaching mounting bracket (A) to an existing outlet box (not included) with pre-installed screws***, spring washers and flat washers, slide mounting bracket (A) over the screws. *Then proceed to the following paragraph.* ***If attaching mounting bracket (A) to outlet box where screws/washers were removed***, secure mounting bracket (A) to outlet box using the screws, spring washers and flat washers previously removed in (Step 2, page 7).

   ⚠ **WARNING:** It is very important you use the proper hardware when installing the mounting bracket as this will support the fan.

5a. ⚠ **DANGER:** To reduce the risk of serious injury or death, the outlet box screws MUST be installed somewhere within the long slots of the mounting bracket and then TIGHTENED DOWN COMPLETELY. [Refer to Fig. 5a.]

5b. ⚠ **DANGER:** To reduce the risk of fire, electrical shock, serious personal injury or damage to the fan, make sure outlet box screws DO NOT get installed on or near the wall that separates the keyhole and the long, narrow slot on each side of the mounting bracket. [Refer to Fig. 5b.]

   ⚠ **WARNING:** If using the angle mount, make sure open end of mounting bracket (A) is installed facing the higher point of the ceiling, and ensure the ceiling angle is not steeper than 19°.

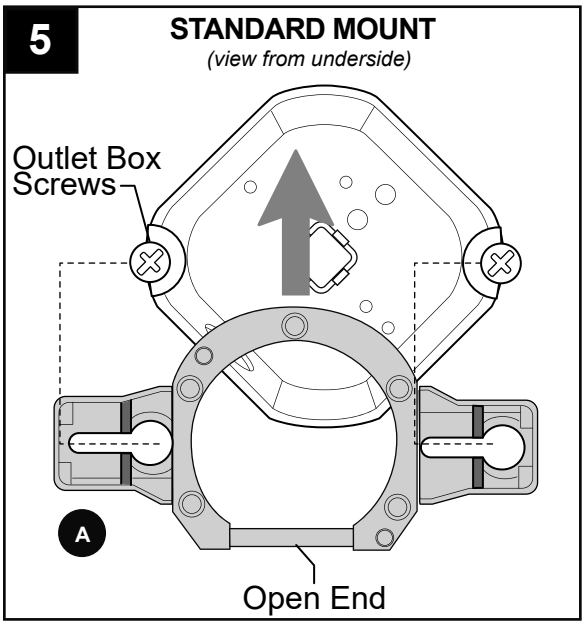

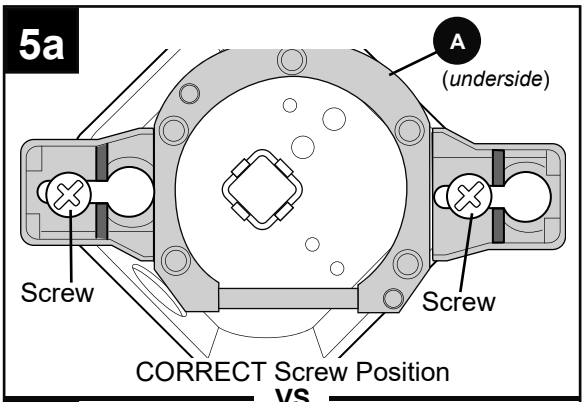

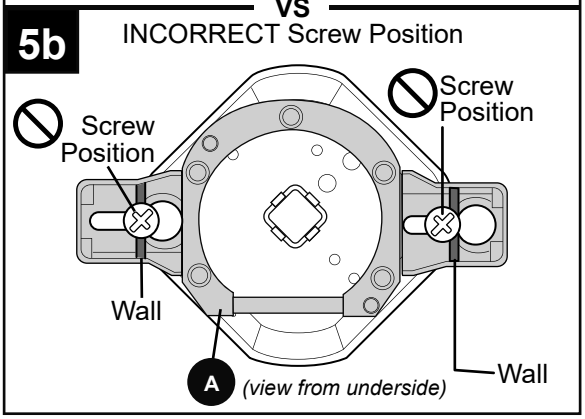

INITIAL INSTALLATION

6. Remove blade screws/lock washers (L) from underside of motor housing (F) and save for blade (G) attachment later on. Remove and discard plastic motor block ring installed with the blade screws/lock washers (L).

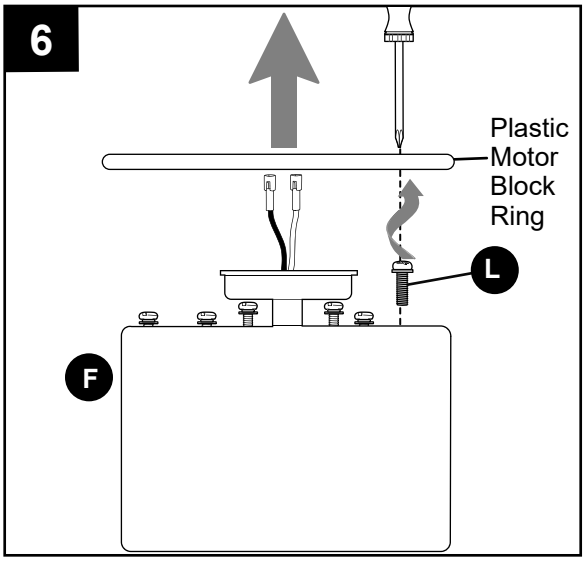

7. Remove preassembled canopy cover (P) from bottom of canopy (E). **NOTE**: Turn canopy cover (P) to the left (counterclockwise) to remove from canopy (E).

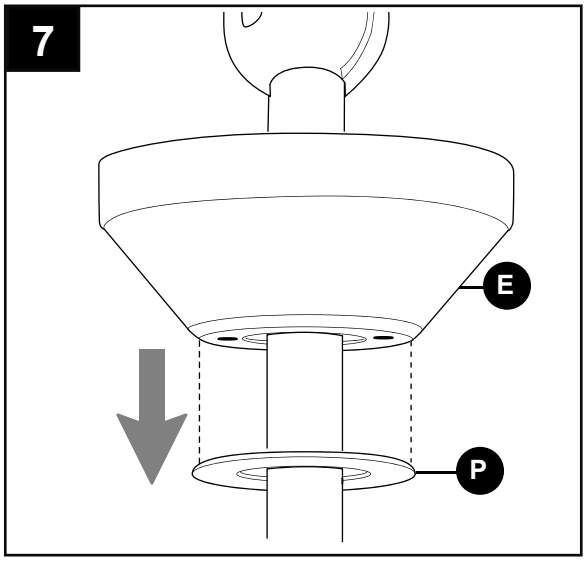

8. To ensure secure downrod (B) assembly, lift canopy (E) and yoke cover (H) on downrod (B). Securely tighten yoke set screws and nut on yoke on top of motor housing (F).

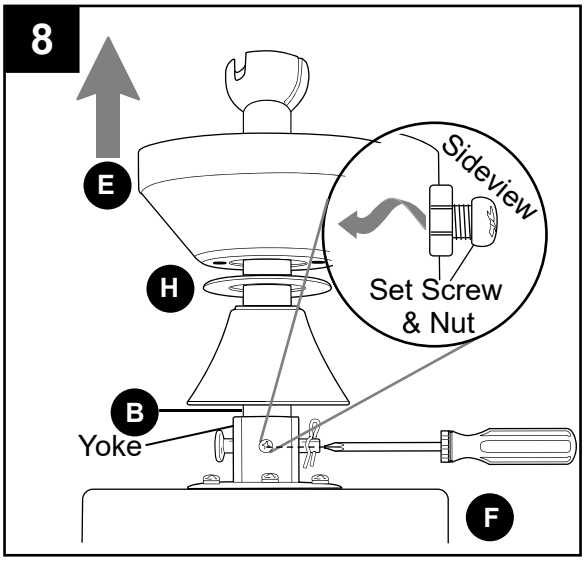

INITIAL INSTALLATION

9. Depending on the length of downrod you use, you may need to use the additional lead wiring (N).

   Connect male plug from motor housing (F) to the end of additional lead wiring (N) with female plug. Make sure plugs connect tightly.

   NOTE: If you do ***not*** use additional lead wiring (N), ***Step 9 is not necessary and you may proceed to Step 10 instead***.

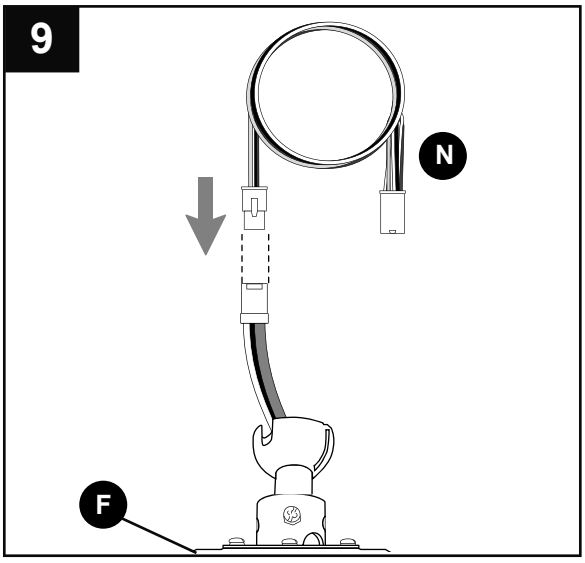

10. Lift motor housing (F) to mounting bracket (A) and install hanging ball of downrod (B) into opening of mounting bracket (A). Align the slot in hanging ball with the tab in mounting bracket (A).

    ⚠ **DANGER:** Failure to align slot in hanging ball with the tab in mounting bracket (A) may result in serious injury or death.

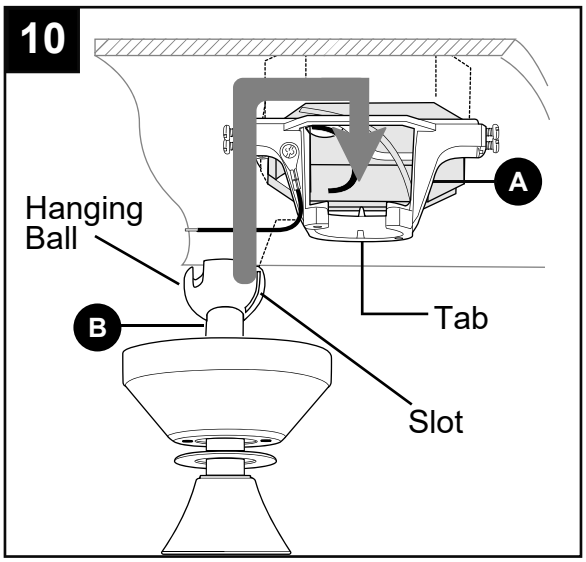

WIRING

⚠ **WARNING:** To reduce the risk of fire, electrical shock or personal injury, lever wire connectors provided with this fan are designed to accept only one 12-gauge house wire and one lead wire from the fan. If your house wire is larger than 12-gauge or there is more than one house wire to connect to the corresponding fan lead wires, consult an electrician for the proper size lever wire connectors to use.

⚠ **CAUTION:** Be sure outlet box is properly grounded and that a ground (GREEN or BARE) wire is present.

⚠ **WARNING:** If house wires are different colors than referred to in the following steps, stop immediately. A professional electrician is recommended to determine wiring.

⚠ **WARNING:** Using a full range dimmer switch (not included) to control fan speed will cause a loud humming noise from fan. To reduce the risk of fire or electrical shock, do NOT use a full range dimmer switch to control fan speed.

WIRING

1. **IMPORTANT:** Each wire connection is made by firmly raising the levers on each lever wire connector (AA), as shown. Then, ONE wire is inserted into each opening.

   ⚠ **WARNING**: In order for wire connections to be secure, all levers on the lever wire connectors (AA) must be completely returned to their original position as shown on Step 2.

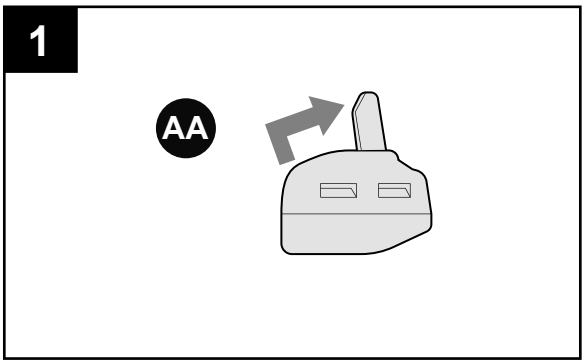

2. Insert each GROUND (GREEN) wire from fan (on downrod (B), if applicable, and mounting bracket (A)) and the BARE/GREEN wire from ceiling into openings in lever wire connector (AA) with three levers.
   Insert BLACK wire from remote control receiver (M) and BLACK wire from ceiling into openings in lever wire connector (AA).
   Insert WHITE wire from remote control receiver (M) and WHITE wire from ceiling into openings in lever wire connector (AA).
   Connect plug from remote control receiver (M) to plug from motor housing (F).

   NOTE: BLACK wire is hot power for fan. WHITE wire is common for fan and light kit. GREEN or BARE wire is ground.

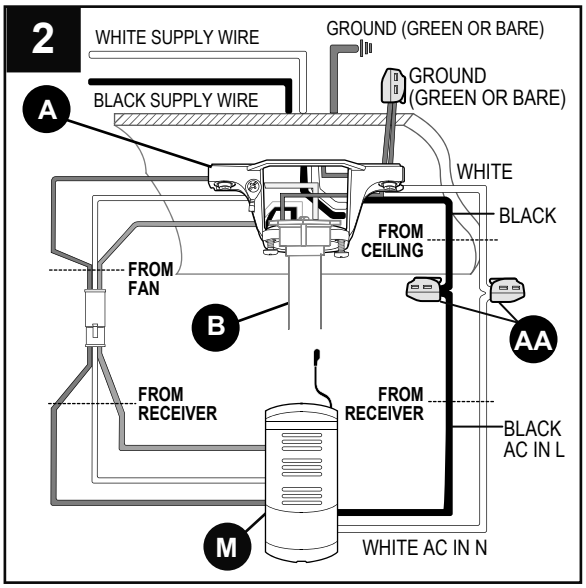

3. Wrap electrical tape (not included) around each individual wire connector (AA) down to the wire.

   ⚠ **WARNING**: Make sure no bare wire or wire strands are visible after making connections. Place GREEN and WHITE connections on opposite side of the outlet box from the BLACK and BLUE (if applicable) connections.).

   ⚠ **WARNING:** GENTLY pull on wires in each lever wire connector (AA) to confirm the lock is engaged and that wires are secure.

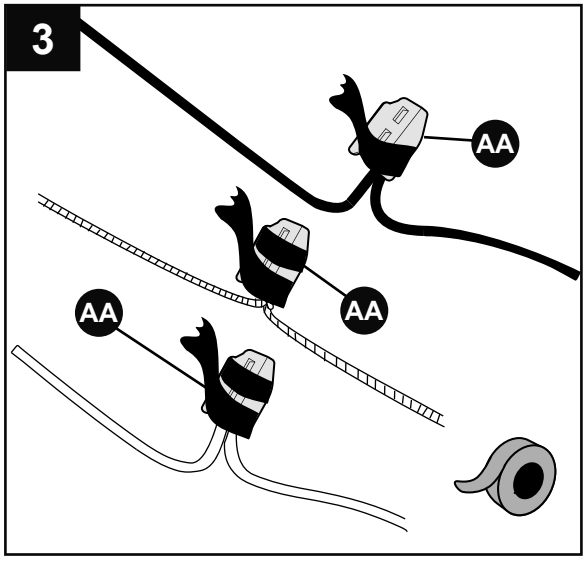

Hardware Used

CC	Lever Wire Connector	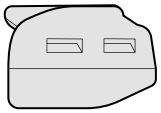	x 3

WIRING

4. Gently slide remote control receiver (M) flat-side up into mounting bracket (A). Turn spliced/taped wires upward and gently push wires and lever wire connectors (AA) into outlet box. Let antenna from remote control receiver (M) hang to the side.

   NOTE: The remote control included with this fan meets the following requirements:

   a. Not for use with solid state fans.

   b. Electrical rating: 120V / 60 Hz; motor amps:1.25 MAX.

   Should you choose to use a different remote control with this fan, it must also meet these same requirements.

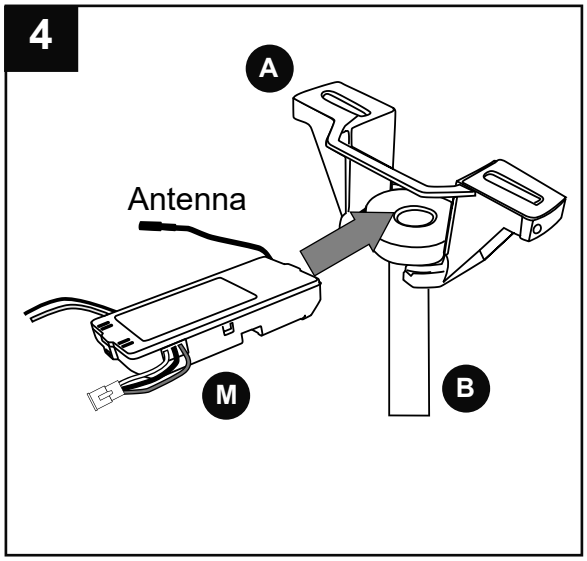

FINAL INSTALLATION

1. Locate two canopy mounting screws (K) on underside of mounting bracket (A) and remove canopy mounting screw (K) closest to the open end of the mounting bracket (A). Partially loosen the other canopy mounting screw (K). Lift canopy (E) to mounting bracket (A). Place rounded part of slotted hole in canopy (E) over loosened canopy mounting screw (K) and push up. Twist canopy (E) to lock. Re-insert canopy mounting screw (K) that was removed, then tighten both canopy mounting screws (K).

   Locate knobs on center ring of canopy cover (P). Slide canopy cover (P) up to canopy (E), aligning knobs on canopy cover (P) with openings in bottom of canopy (E). Press up gently but firmly on canopy cover (P) until it fits into the bottom of the canopy (E) and then turn canopy cover (P) about 1/2 in.

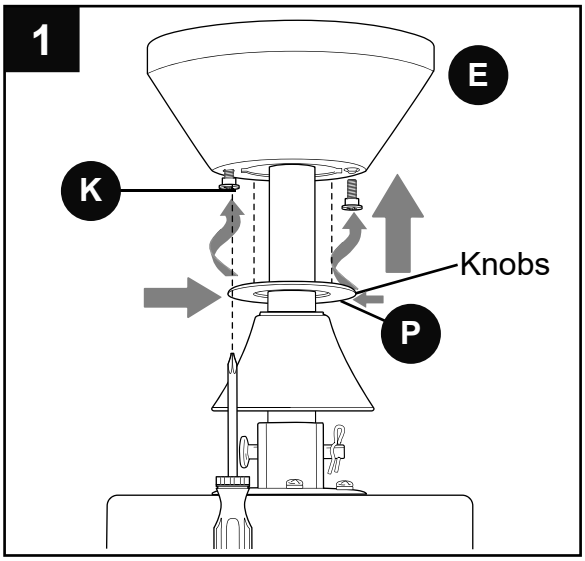

FINAL INSTALLATION

2. ⚠ **DANGER**: To reduce the risk of serious bodily injury, DO NOT use power tools to assemble the blades (G). If screws are overtightened, blades (G) may crack and break.

   Noting the THIS SIDE UP label on blade (G), align holes in blade (G) and blade plate (J) with holes on the bottom of motor housing (F) *as shown*. Partially insert three blade screws/lock washers (L) previously removed (Step 6, page 9) to attach blade (G) and blade plate (J) to motor housing (F). Tighten blade screws/lock washers (L) securely. Repeat Step 2 for remaining blades (G).

   NOTE: Make sure to completely secure each blade (G) before proceeding to the next.

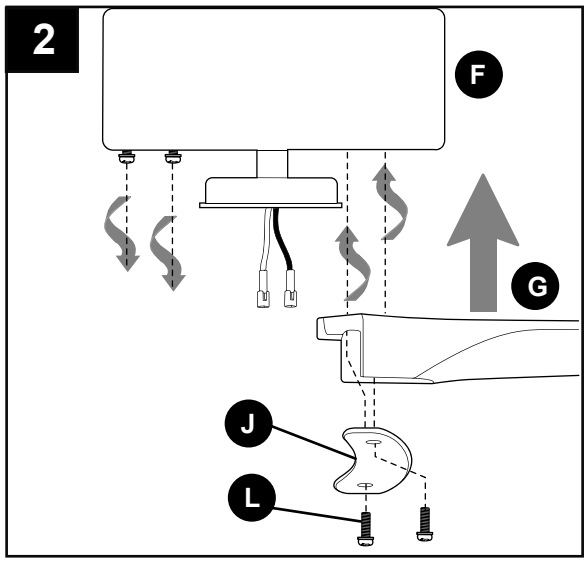

3. Connect WHITE wire from LED light kit (I) to WHITE wire from motor housing (F). Connect BLUE wire from LED light kit (I) to BLUE (or BLACK) wire from motor housing (F). Make sure molex connections snap together securely.

   Carefully arrange wiring within LED light kit (I).

   ⚠ **WARNING**: Make sure wires do not get pinched in between LED light kit (I) and motor plate. This could cause damage to the wire(s).

   Observe the indentation on each groove at the top of LED light kit (I). Align these 3 indentations with the 3 protusions located on the inner part of the motor plate. Push up on LED light kit (I) and turn to the RIGHT (clockwise) until it no longer turns, thus securing the LED light kit (I) to the motor housing (F).

   ⚠ **WARNING**: It is extremely important that you make sure to turn the LED light kit (I) all the way to the right to ensure that the LED light kit (I) is completely secure.

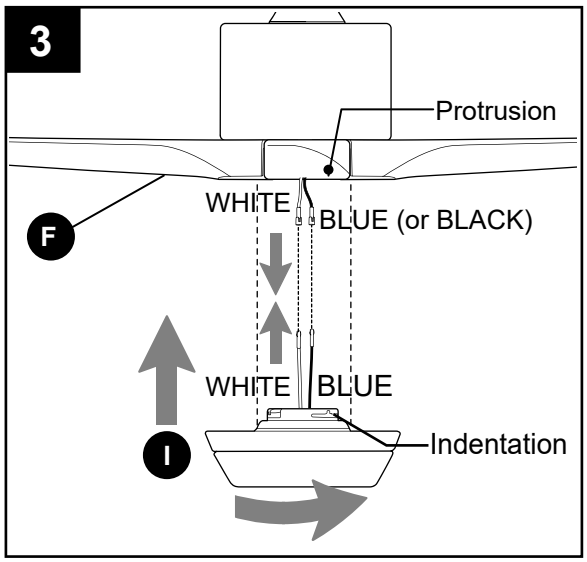

OPERATING INSTRUCTIONS

⚠ **CAUTION:** The remote control transmitter can be programmed to multiple receivers or fans. If this is not desired, turn wall switch off to any other programmable receiver or fan.

FCC Compliance Notice for Remote Control and LED Light Kit

⚠ **CAUTION**: Changes or modifications not approved by the party responsible for compliance could void the user's authority to operate the equipment.

This device complies with Part 15 of the FCC Rules. Operation is subject to the following two conditions: (1) this device may not cause harmful interference, (2) this device must accept any interference received, including interference that may cause undesired operation.

NOTE: This equipment has been tested and found to comply with the limits for a Class B digital device, pursuant to Part 15 of the FCC Rules. These limits are designed to provide reasonable protection against harmful interference in a residential installation. This equipment generates, uses and can radiate radio frequency energy and, if not installed and used in accordance with the instructions, may cause harmful interference to radio communications. However, there is no guarantee that interference will not occur in a particular installation. If this equipment does cause harmful interference to radio or television reception, which can be determined by turning the equipment off and on, the user is encouraged to try to correct the interference by one or more of the following measures:

* Reorient or relocate the receiving antenna.
* Increase the separation between the equipment and receiver.
* Connect the equipment into an outlet on a circuit different from that to which the receiver is connected.
* Consult the dealer or an experienced radio/TV technician for help.

Distributed by: Litex Industries Inc., P.O. Box 535639, Grand Prairie, TX, 75053; 800-527-1292

1. Locate battery and remote control transmitter in remote pack (O). Remove protective covering from each one and discard protective covering. Remove battery cover from back of remote control transmitter. Install 12-volt battery (included).

   ⚠ **WARNING:**Battery is to be inserted with correct polarity.

   Replace battery cover on the back side of the remote control transmitter.

   ⚠ **WARNING:** ***Choking/Ingestion Hazard*** - Small parts. Keep battery away from children.

   NOTE: Battery is NOT rechargeable. Remove battery with low or no charge and dispose of properly.

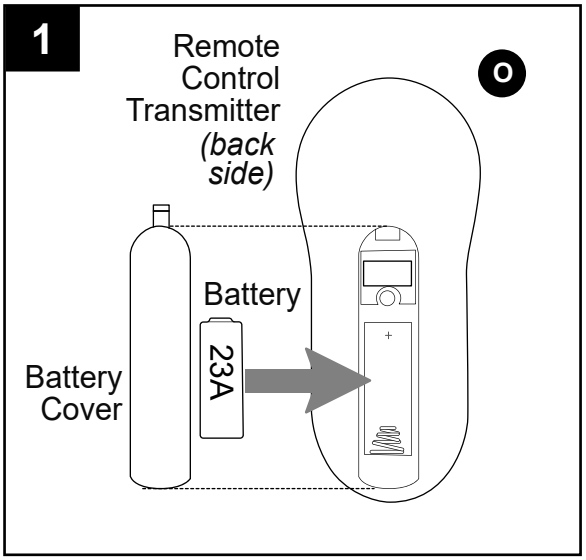

⚠ **CAUTION:** "DO NOT DISPOSE OF BATTERIES IN FIRE, BATTERIES MAY EXPLODE OR LEAK." - When disposing of household alkaline batteries, it is best to check with your local and state recycling or household hazardous waste coordinators concerning the specifics of the program in your area. You may also locate a recycling center by calling 1-800-8-BATTERY or 1-877-2-RECYCLE or visit www.epa.gov/epawaste/index.htm or www.earth911.org for more information.

OPERATING INSTRUCTIONS

2. Restore electrical power.
   IMPORTANT: To prevent damage to remote control transmitter, remove the battery if not used for long periods. Store the remote control transmitter away from excess heat or humidity.

   NOTE: If fan and/or remote control fail(s) to operate or you have purchased a new remote control transmitter, make sure to turn the power off first. Restore electrical power. Within 30 seconds of restoring electrical power, press and hold the ON/OFF button (⏻) on the remote control transmitter for 5 seconds until light blinks twice. Use the remote control transmitter to test the light and fan functions to confirm the learning process is complete.

2

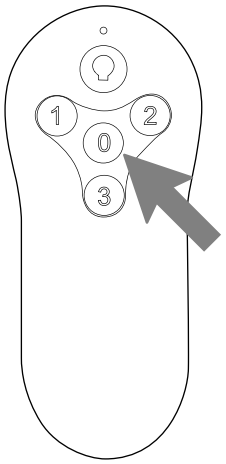

Remote Control Transmitter

3. Operation buttons on the panel of the remote control transmitter:

3 button	for fan **HIGH** speed
2 button	for fan **MEDIUM** speed
1 button	for fan **LOW** speed
0 button	to turn fan **OFF**
♡ button	to turn light **ON** or **OFF**

   Tap ♡ button quickly to turn lights off or on. Hold ♡ button down to increase or decrease lights. If you press ♡ button in excess of 0.7 seconds, it becomes a dimmer. The lights vary cyclically in 8 seconds. The light button has an auto resume function, which keeps the light at the same brightness as the last time it was turned off.

3

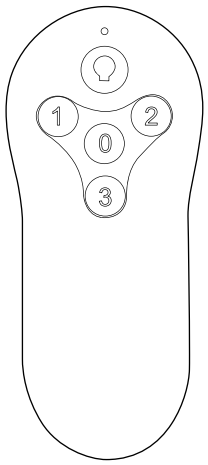

Remote Control Transmitter

4. Use the fan reverse switch on the top part of motor housing (F) to optimize the fan for seasonal performance. A ceiling fan will allow you to raise your thermostat setting in summer and lower your thermostat setting in winter without feeling a difference in your comfort.

   ⚠ **CAUTION:** Turn fan off at wall switch and let blades (G) come to a complete stop before manually activating the reverse switch.

4

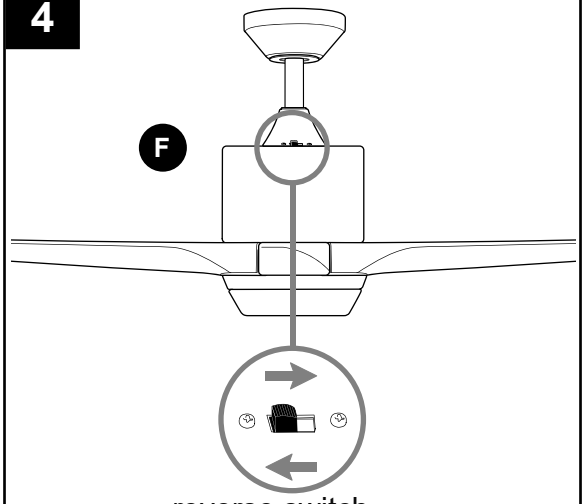

reverse switch

OPERATING INSTRUCTIONS

4a. In **warmer** weather, setting the reverse switch in the LEFT position will result in downward airflow creating a wind chill effect.

4b. In **cooler** weather, setting the reverse switch in the RIGHT position will result in upward airflow that can help move stagnant, hot air off the ceiling area.

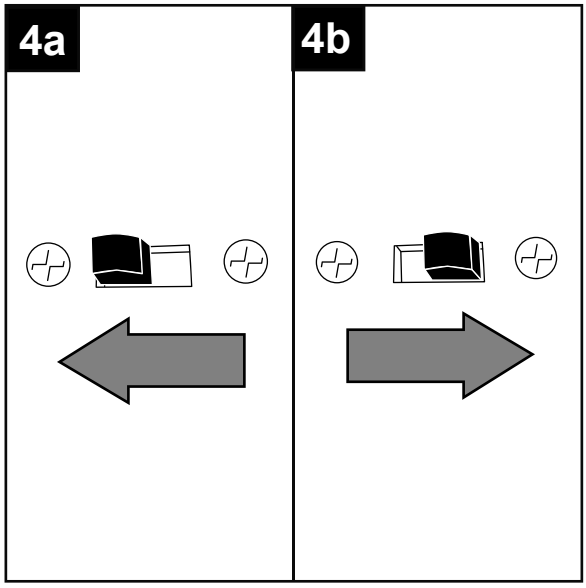

4c. **IMPORTANT:** Reverse switch must be set either ***completely*** LEFT or ***completely*** RIGHT for fan to function. If the reverse switch is set in the middle position, fan will not operate.

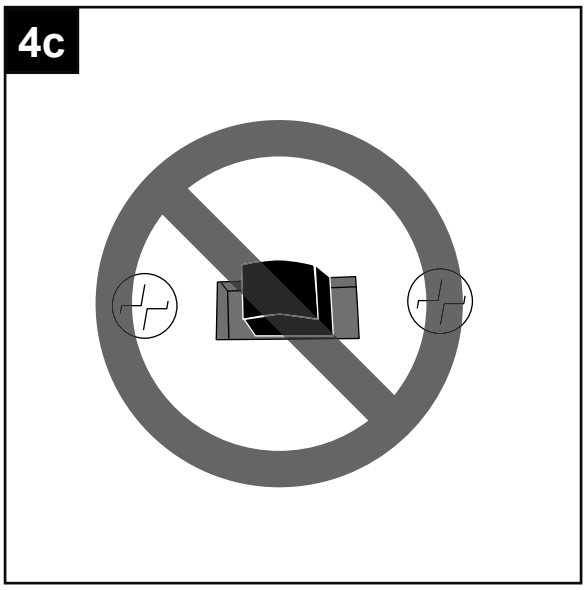

CARE AND MAINTENANCE

At least twice each year, lower canopy (E) to check downrod (B) assembly, and then tighten all screws on fan. Clean motor housing (F) with only a soft brush or lint-free cloth to avoid scratching the finish. Clean blades (G) with a lint-free cloth. You may occasionally apply a light coat of furniture polish to wood blades for added protection.

IMPORTANT: Shut off main power supply before beginning any maintenance. Do not use water or a damp cloth to clean the ceiling fan.

• Total wattage for the light kit for this fan is 18 watts; do not attempt to replace the LEDs.

TROUBLESHOOTING

⚠ **WARNING**: Before beginning work, shut off the power supply to avoid electrical shock.

PROBLEM	POSSIBLE CAUSE	CORRECTIVE ACTION
Fan does not move.	1. Reverse switch not engaged. 2. Power is off or fuse is blown. 3. Faulty wire connection. 4. Learning code process between fan and remote control transmitter may not have been successful and learning code was not activated.	1. Push switch firmly either left or right. 2. Turn power on or check fuse. 3. Turn power off. Loosen canopy and check all connections. 4. Turn off power and repeat instructions in Step 2 on page 15.
Noisy operation.	1. Blades are loose. 2. Cracked blade. 3. Fan is new.	1. Tighten all blade screws. 2. Replace blade. 3. Allow fan a “break in” period of a few days, especially when running the fan at Medium and High speeds.
Excessive wobbling.	1. Blades are loose. 2. Unbalanced blades. 3. Fan not securely mounted. 4. Fan too close to vaulted ceiling. 5. Set screw(s) on motor housing yoke is (are) not tightened properly. 6. Set screw on hanging ball is not tightened properly.	1. Tighten all blade screws. 2. Switch one blade with a blade from the opposite side. 3. Turn power off. Carefully loosen canopy and verify that mounting bracket is secure. 4. Use a longer downrod or move fan to another location. 5. Tighten yoke set screw(s) securely. 6. Carefully loosen and lower canopy and verify that set screw on hanging ball is tightened securely.
Fan operates but light fails	1. Wires in canopy not wired properly. 2. Wall switch to fan is off. 3. Wires in LED light kit not wired correctly.	1. Check wires in canopy and, if necessary, re-wire according to instructions on page 11. 2. Make sure that wall switch to fan is on. 3. Check that molex connections in LED light kit are connected properly according to instructions on page 13.
Remote control fails to operate.	1. Remote control transmitter not synced with fan. 2. Battery not installed correctly. 3. Battery no longer working.	1. Refer to instructions in Step 2 on page 15. 2. Check that battery has been installed with correct polarity. 3. Replace battery according to instructions on page 14.

NOTE: A small amount of "wobble" is normal and should not be considered a defect.

LIMITED LIFETIME WARRANTY

Set forth below, the manufacturer warrants the fan motor for this ceiling fan to be free from defects in workmanship and material for the life of the product. Also, subject to the limitations below, the manufacturer warrants all ceiling fan parts (“ceiling fan parts” excludes the motor and parts made in whole or in part with glass) to be free from defects in workmanship and material for a period of one year after the date of purchase by the original purchaser at retail.

All claims must be made by the original purchaser, whether such purchaser purchased the product through a store or contractor. Ceiling fan part defects must be reported within the first year from the date of purchase. Parts made in whole or in part with glass and the finishes of metal and other surfaces are not warranted.

Purchasers are responsible for all costs of removing and reinstalling the product. Any damage to any part caused by ordinary wear and tear, accident, misuse, or improper installation, is not covered by this warranty. The manufacturer assumes no responsibility whatsoever for fan installation. Any service performed by a non-licensed electrician will render the warranty invalid.

The manufacturer’s sole responsibility shall be to repair or replace the motor, parts, or product within the terms stated above. The manufacturer shall not be liable for any loss or damage of any kind, including any incidental or consequential damages resulting directly or indirectly, from any breach of warranty, express or implied, or any other failure of this product. Some states do not allow the exclusion or limitation of incidental or consequential damages so this limitation may not apply to you.

If the original purchaser ceases to own the fan, this warranty is voided.

Should the purchaser encounter a problem with your fan related to defects in workmanship or materials within the warranty period associated with the defective part, the manufacturer agrees to replace the defective part without charge, or at its option, to replace the ceiling fan with a comparable or superior model.

The manufacturer’s warranties are limited to the written warranties set out in this ceiling fan limited lifetime warranty. All other express and implied warranties, including, without limitation, the implied warranty of fitness for a particular purpose and the implied warranty of merchantability are disclaimed. Some states do not allow the disclaimer of implied warranties, so this disclaimer may not apply to you.

REPLACEMENT PARTS LIST

All parts are replaceable (see parts list in “Package Contents” on Page 5), however, only the parts listed below are under warranty. For replacement parts, call our customer service department at **800-527-1292**, 8:30 a.m. - 5 p.m., CST, Monday - Friday.

PART	DESCRIPTION	PART #
A	Mounting Bracket	6838215-A
B	Downrod	6838215-B
E	Canopy	6838215-E
G	Blade	6838215-G

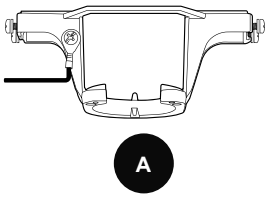

A

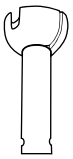

B

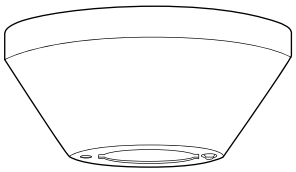

E



G