## Parts Identification

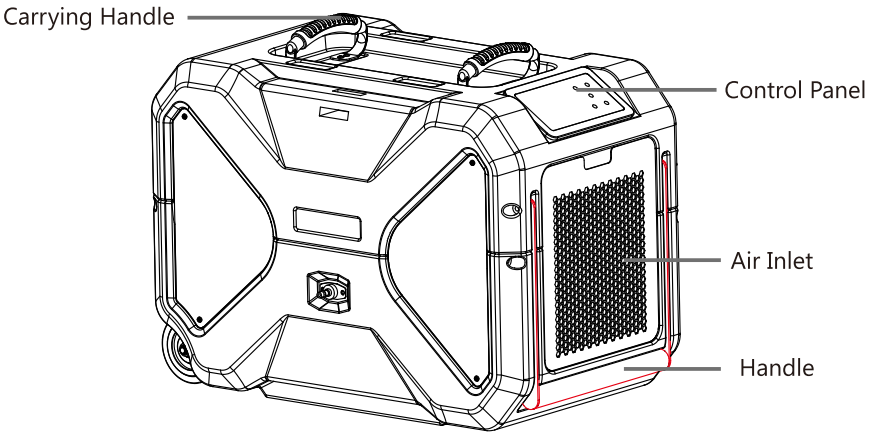


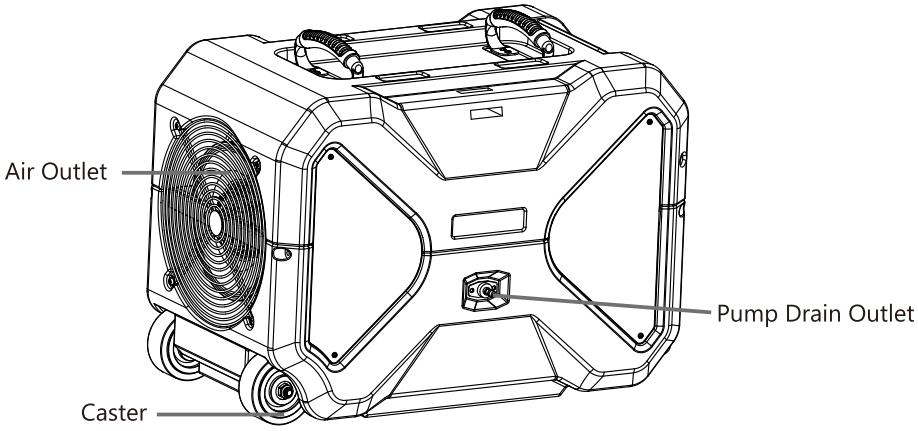


**Note: Do not obstruct the air inlet and/or outlet.**

## Operation Instructions

### 1. Move the Dehumidifier

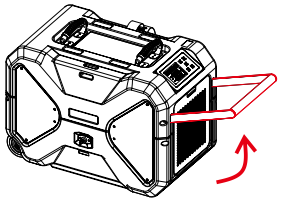

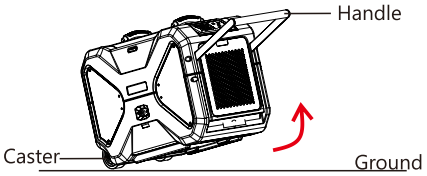


(1) Lift the handle.
(2) While holding the handle, gently raise the dehumidifier off the ground.
(3) Pull the dehumidifier forward and move it to the desired location.
**Note:** Avoid tilting the dehumidifier more than 45° while moving. If the dehumidifier is tilted beyond 45° during movement, allow it to stand upright for at least 30 minutes before powering it on to ensure proper refrigerant settling.

### 2. Position Your Dehumidifier

(1) Place the dehumidifier on a flat, stable surface to reduce vibration and noise.
(2) Maintain at least 6 ft of clearance around the dehumidifier. Ensure nothing blocks the air inlet or outlet.
(3) For best performance, operate the dehumidifier in a closed space. Keep all doors and windows shut during operation.

### 3. Set the Drain Hose

The dehumidifier features a built-in pump designed for upward drainage and comes with a 16.4 ft drain hose for convenient water removal.

**To set up the drain hose:**

- Securely attach the provided drain hose to the pump drain outlet. If using an alternative hose (inner diameter 0.2 in / 5 mm), ensure it fits tightly to prevent leaks.
- Position the other end of the hose in a sink, floor drain, sump pit, or outside a window—any location where water can drain safely.
- Make sure the hose is free from kinks, twists, or blockages to allow smooth water flow.

**Note:**

- The pump automatically activates when the internal water level reaches a certain point.
- Use the Purge function by holding the Power button for at least 5 seconds to manually activate the pump—useful before moving or storing the dehumidifier to prevent spills or mould.
- If the dehumidifier fails to drain automatically, contact service@moiswell.com for support.
- The pump can drain water vertically up to 16.4 ft. Exceeding this height may cause water backup or leakage.

• Avoid using an excessively long hose, as it may lead to incomplete drainage and mould growth.
• If draining into a bucket or container, check it regularly to prevent overflow.

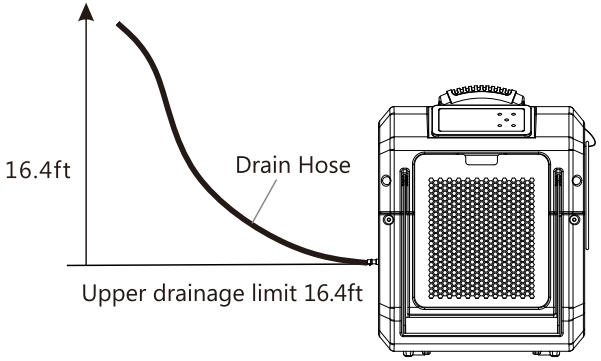


**4. Plug in Electrical Cord**

**IMPORTANT**

Please let the dehumidifier stand upright for **24 hours** before plugging in for the first time. During the shipping process, the dehumidifier may have been subjected to tilting or even placed upside down, which can cause the oil in the compressor to become unsettled. Hence, kindly make sure to follow this crucial step before using the dehumidifier.

To properly operate the dehumidifier, please plug it into a GFCI-protected 120-volt outlet with a rating of at least 14 amps. Uncoil the power cord and securely connect it to an appropriate outlet.
**Note:** When the dehumidifier is first plugged into AC power, the control panel display will light up for a second, which is part of the dehumidifier's self-diagnosis procedure and no action is required. This indicates that the dehumidifier is functioning correctly and ready to operate effectively. You will still need to press the POWER button to turn the dehumidifier on.

**5. Understand the Control Panel**
The control panel of the dehumidifier features a user-friendly interface with 4 buttons and an LED screen. Press the POWER Button to turn the dehumidifier on. After turning on the dehumidifier, the LED screen will display the readouts. If not been operated for over 50 seconds, the control panel will become dim until pressed buttons again.

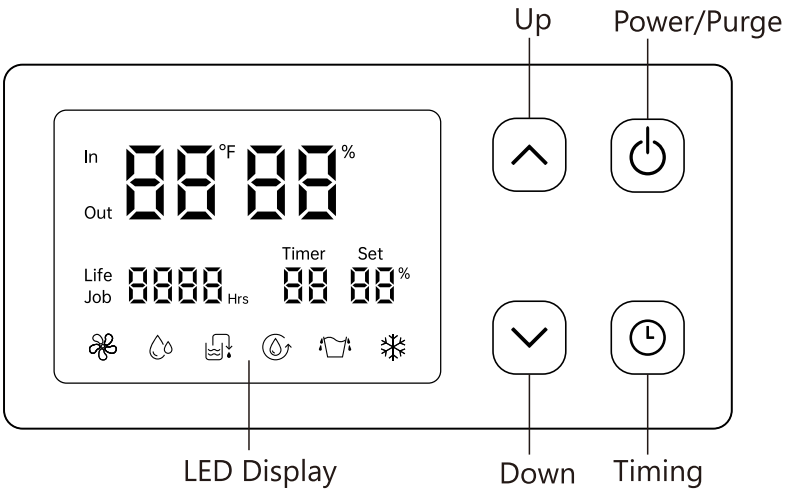


**Inlet/Outlet Air Temperature & Humidity Reading**

By default, these numbers show the inlet air temperature and humidity reading, and the "In" icon lights up. To check the outlet air temperature and humidity reading, press and hold the ^ button for 5 seconds. The "Out" icon will light up. After 5 seconds, it automatically returns to the inlet air reading.

**Current/Total Operating Hours**

By default, the display shows the current operating hours (also called job hours)—the total time the dehumidifier has run since it was turned on. The "Job" icon lights up.
To view the total (lifetime) operating hours, press and hold the v button for about 5 seconds. The "Life" icon lights up. After 5 seconds, it automatically returns to the current operating hours.

**Note:**

The maximum total operating time display is 9999 hours. When the total exceeds 9999 hours, the counter automatically resets to 0000 and resumes counting.

**Timer Display**

This number displays the timer settings when the timer function is enabled and stays off when the timer function is disabled.

**Humidity Setting**

This number displays the humidity setting.

The fan icon lights up when the fan is running and lights off when the fan stops.

 This water droplet icon lights up when the compressor is running and lights off when the compressor stops.

**Note:** It is normal for the water droplet icon does not light up, which indicates the compressor is not running, in the following situations:

- The humidity set-point is not at least 3%( recommended 5%) lower than the inlet air humidity reading. Check your setting.
- The dehumidifier was just turned on; the compressor may take a few seconds to start.
- The room humidity has reached the set-point, and the dehumidifier stops and enters standby mode.
- The dehumidifier was restarted recently; the compressor is in 3-minute delay protection mode.

 The pump icon lights up when the pump is running and lights off when the pump stops (standby).

 The continuous running icon lights up when the humidity setting is 10%, indicating the dehumidifier will run continuously.

 This water-full icon lights up when the pump fails to drain automatically, causing the internal water reservoir to become full. Please contact service@moiswell.com for assistance. Once the issue is resolved, the icon will turn off automatically.

 The defrost icon lights up when the dehumidifier detects frost on the coils. The dehumidifier will automatically stop dehumidifying and begin defrosting.

During defrosting, the fan operates while the compressor does not, and the defrost icon lights up until the frost melts. The dehumidifier resumes normal operation, and the defrost icon lights off automatically once defrosting is complete.

**Note:** Frequent defrosting may indicate that the room temperature is too low. For optimal drying, maintain the room temperature above 65°F.

| Button | Function |
|---|---|
|  | • Press to turn the dehumidifier on or off.<br>• Press and hold for 5 seconds to activate the pump to drain (purge function).<br>**Note:** The dehumidifier will automatically drain condensate water when the internal water reservoir reaches a near-full level. If it does not drain automatically, please contact service@moiswell.com for assistance.<br>Use the **Purge** function to manually drain the internal water only before moving the dehumidifier to avoid leaks, or before storing it to prevent mold. |
|  | • Press to increase the humidity setting, or increase the timer value in timer setting mode.<br>• Press and hold for 5 seconds to check the outlet air temperature and humidity reading. |
|  | • Press to decrease the humidity setting, or decrease the timer value in timer setting mode.<br>• Press and hold for 5 seconds to check the total operating hours. |
|  | Press to enter timer setting mode. |

**6. General Operation Instructions**

**(1) Turn on the dehumidifier**

Press the Power Button to turn on the dehumidifier.

**(2) Set Your Target Humidity Value**

• **Check the current humidity:** Look at the inlet air humidity reading on the top left of the display.

• **Adjust the target humidity:** Press the  or  button to select a target humidity between 10% and 90% in 1% increments. The number under the Set icon (  bottom right of the display) changes as you adjust. The target humidity must be 3% ( recommended 5%)lower than the inlet air humidity reading.

• **Confirm the setting:** After selecting your target humidity, wait 5 seconds for the setting to register.

**Automatic Operation:**

The dehumidifier will cycle on and off to maintain room humidity within ±3% of the target:

- When inlet air humidity drops to 3% below the target, the dehumidifier enters standby mode — compressor and fan stop.
- When inlet air humidity rises to 3% above the target, the dehumidifier automatically restarts and runs until it again reaches 3% below the set level.

**Notes:**

- The target humidity should be 3% lower than the current room humidity. Otherwise, the dehumidifier will remain in standby mode until room humidity rises 3% above the target.
- To run the dehumidifier continuously, set the target humidity to 10% to activate Continuous Mode.

**(3) Turn the dehumidifier off**

Press the Power Button to turn off the dehumidifier.

**Note:** To protect the compressor, the fan will continue to operate for 30 seconds after the dehumidifier shuts off. Use the power button to stop the dehumidifier rather than forcibly by disconnecting the power cord.

**7. Timer Setting**

It enables you to either delay the auto-on or auto-off function of the dehumidifier from 1 to 24 hours.

-Set AUTO-ON: When the dehumidifier is off, press the Timer button to set a desired time it begins to work.

-Set the dehumidifier AUTO-OFF: When the dehumidifier is on, press the Timer button to set a desired time it shuts off.

**Set the TIMER by the Below Steps**

(1) Press the Timer Button and the Timer icon and value Timer 88 lights up and flashes.

(2) Adjust the timer setting by pressing the ⌃ or ⌄ button to change the timer at 1-hour increment up to 24 hours.

(3) After selecting the target time period, just wait for about 5 seconds to let the setting register automatically.

(4) The digital readout will count down the remaining time until the dehumidifier either starts or stops.

(5) To disable the timer function, manually turn the dehumidifier on/off, or set the timer to Timer 00.

**- To set the AUTO ON TIMER:**

First, ensure the dehumidifier is plugged in and turn it on to select your desired humidity level. Then, turn it off and proceed with the timer setting.

**Note:** If you skip setting the humidity level, the previous setting will be used.

- Set AUTO ON timer only when the dehumidifier is off or set AUTO OFF timer when the dehumidifier is on, but not be able to set both AUTO ON and AUTO OFF timer at the same time.
- The AUTO ON/OFF function won't be cycling.
- The TIMER function will be disabled when the dehumidifier was powered on/off manually.
- Set the timer as 

, the timer function will not be activated.

**8. Smart Functions**

**(1) Compressor Delay Start**

To protect internal components, the compressor includes a 3-minute delay after each cycle or power interruption. If the dehumidifier is restarted immediately, the compressor will resume operation after this 3-minute delay.

**(2) Auto Defrost**

If the temperature drops below 65°F, frost may form on the coils. When this happens, the dehumidifier will automatically pause the compressor and run the fan to defrost. The Defrost icon will light up. Once the frost has cleared, the dehumidifier will resume normal operation.

**(3) Auto Restart**

If a power outage occurs while the dehumidifier is running, it will automatically restart with the previous settings (excluding the timer) once power is restored.

## Maintenance

**Ensure the dehumidifier is turned OFF and the plug is removed from the power socket before cleaning or maintenance is carried out.**

**(1) Cleaning the Dehumidifier**

To clean the dehumidifier body, use a soft damp cloth. Do not submerge or pour water on the dehumidifier or control panel, as water can damage the electronic components. Avoid using chemical solvents such as benzene, alcohol, gasoline, or heavy-duty cleaners, as they can damage or deform the surface.

**(2) Cleaning the Air Filter**

The air filter requires regular cleaning to maintain the dehumidifier's performance. Clean the air filter every 2 weeks, or more frequently if there's a significant amount of dander or fur in the air.

**Follow the below steps to maintain the filter**

• Open the intake grill with magnets, pull it out, then take out the filter;

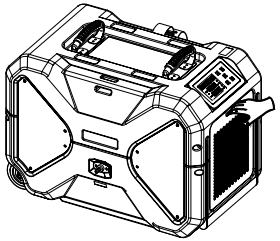

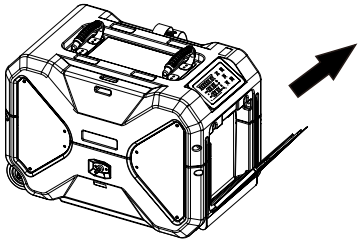

• Use a vacuum cleaner with a soft brush to remove any large debris or dust build-up from the filter.

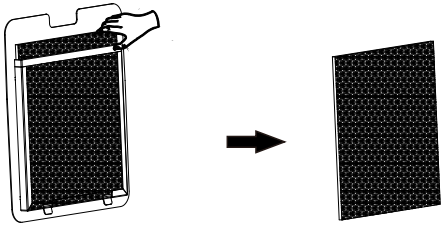

**(3) Store the Dehumidifier**

**When Not Using the Dehumidifier for Long Periods of Time**

- Turn off the dehumidifier and wait one day. Then press and hold the Power button for 5 seconds to activate the pump and purge any remaining water.
- Clean the dehumidifier and air filter thoroughly, ensuring that the dehumidifier is dry before storing it.
- Wrap the cord and hose and bundle them up to keep them safe.

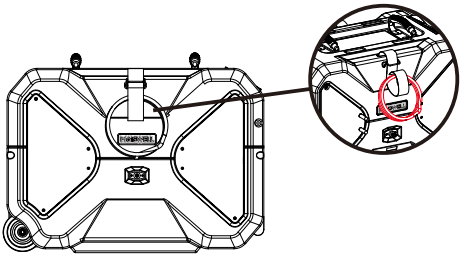

**Drain Hose Storage**

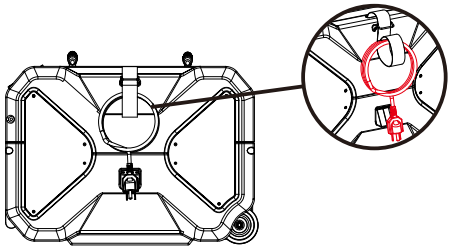

**Power Cord Storage**

- Cover the dehumidifier with a plastic bag.
- Store the dehumidifier upright in a dry, well-ventilated place.