Sofa

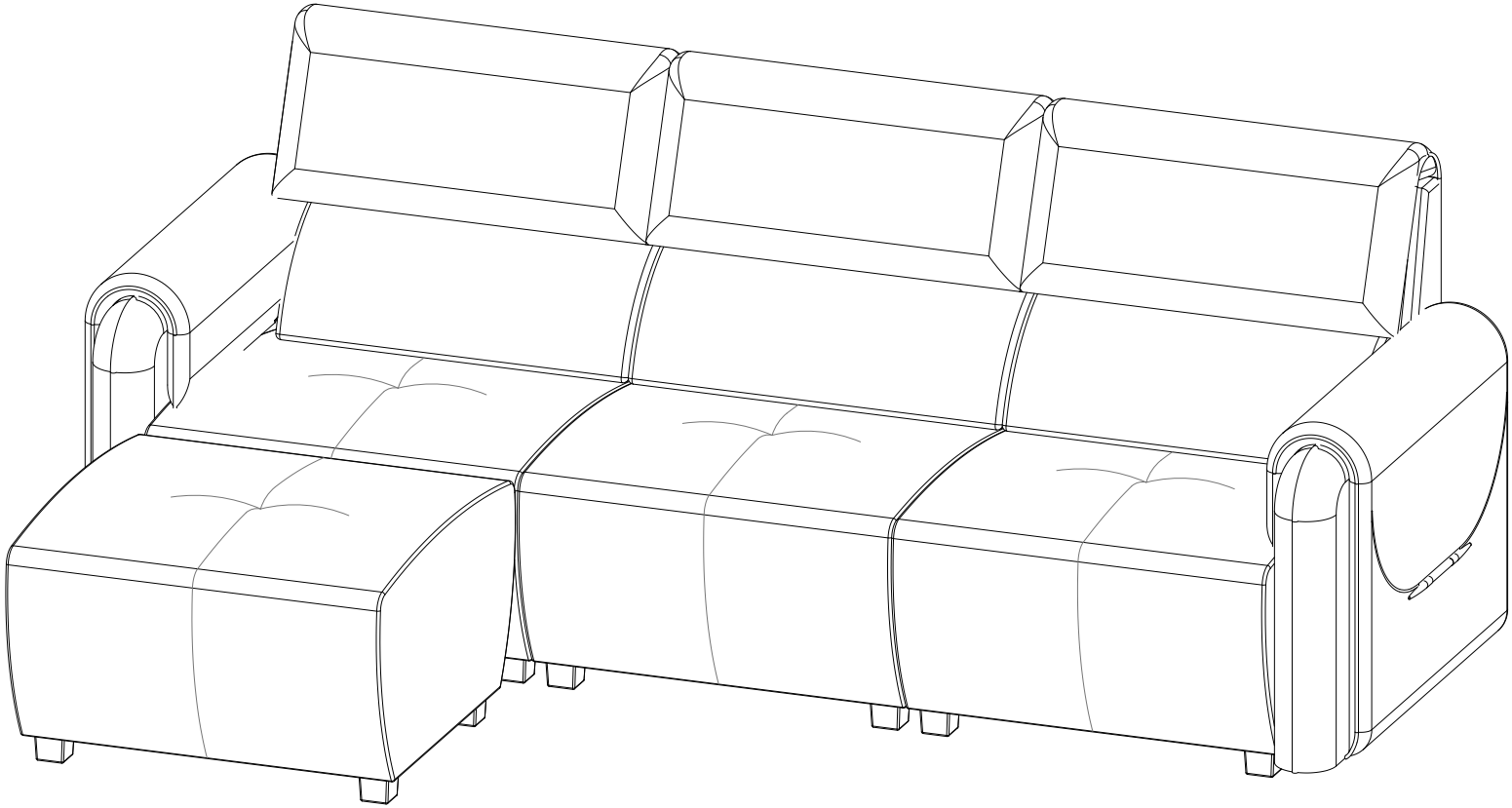

CARTON A: 1PC

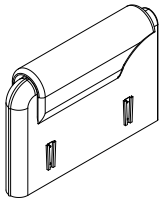

Left Armrest
Ⓕ 1PC

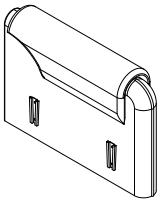

Right Armrest
Ⓖ 1PC

CARTON B: 1PC

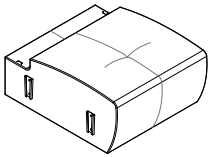

Left Seat Frame
Ⓐ 1PC

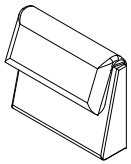

Backrest Frame
Ⓔ 1PC

Lumbar Pillow
Ⓗ 1PC

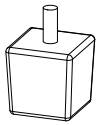

Legs
① 4PCS

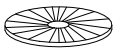

Washers
② 4PCS

Plug-in unit
③ 2PCS

CARTON C: 1PC

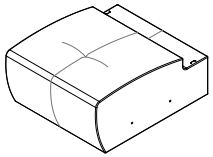

Middle Seat Frame
Ⓒ 1PC

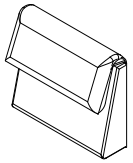

Backrest Frame
Ⓔ 1PC

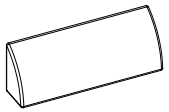

Lumbar Pillow
Ⓗ 1PC

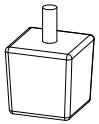

Legs
① 4PCS

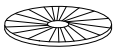

Washers
② 4PCS

Plug-in unit
③ 2PCS

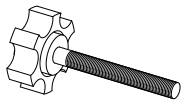

Thumb Bolts
④ 2PCS

Plastic Nuts
⑤ 2PCS

Step3:

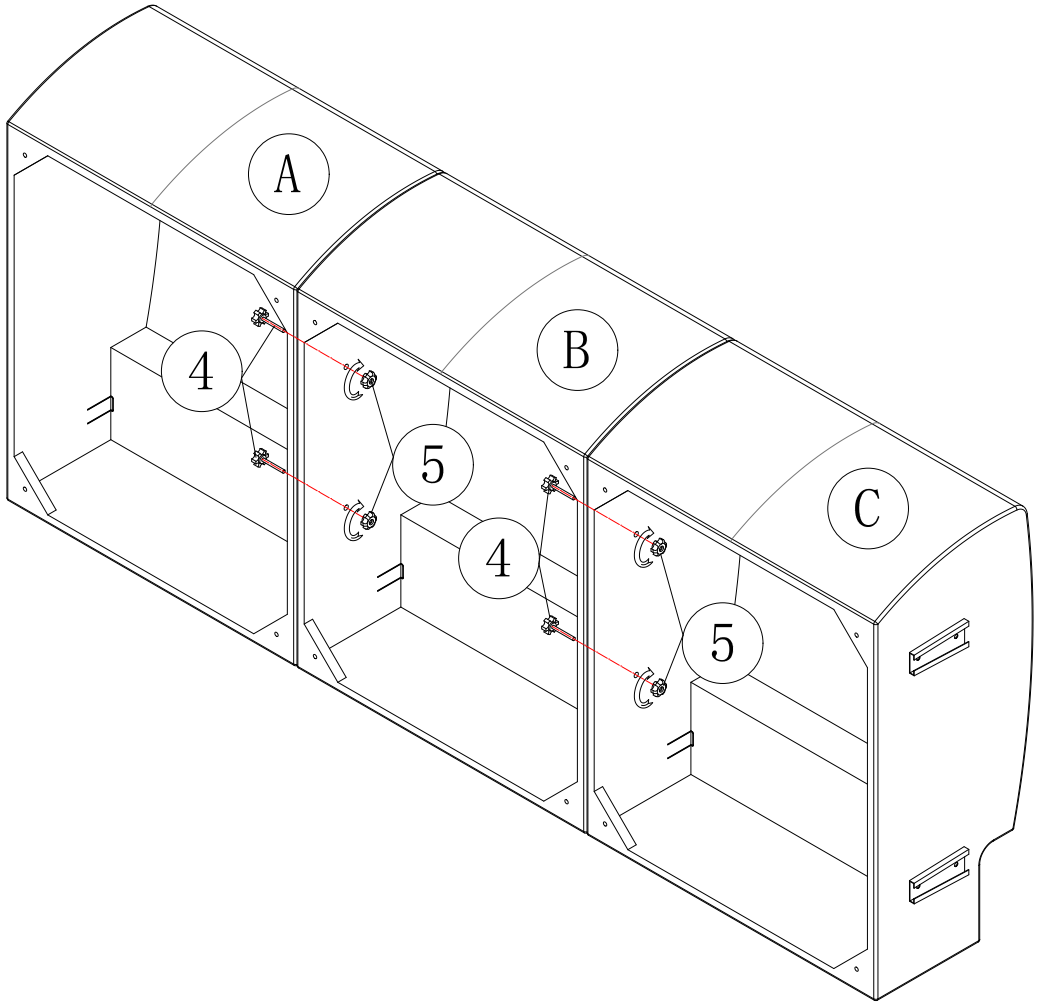

Step4:

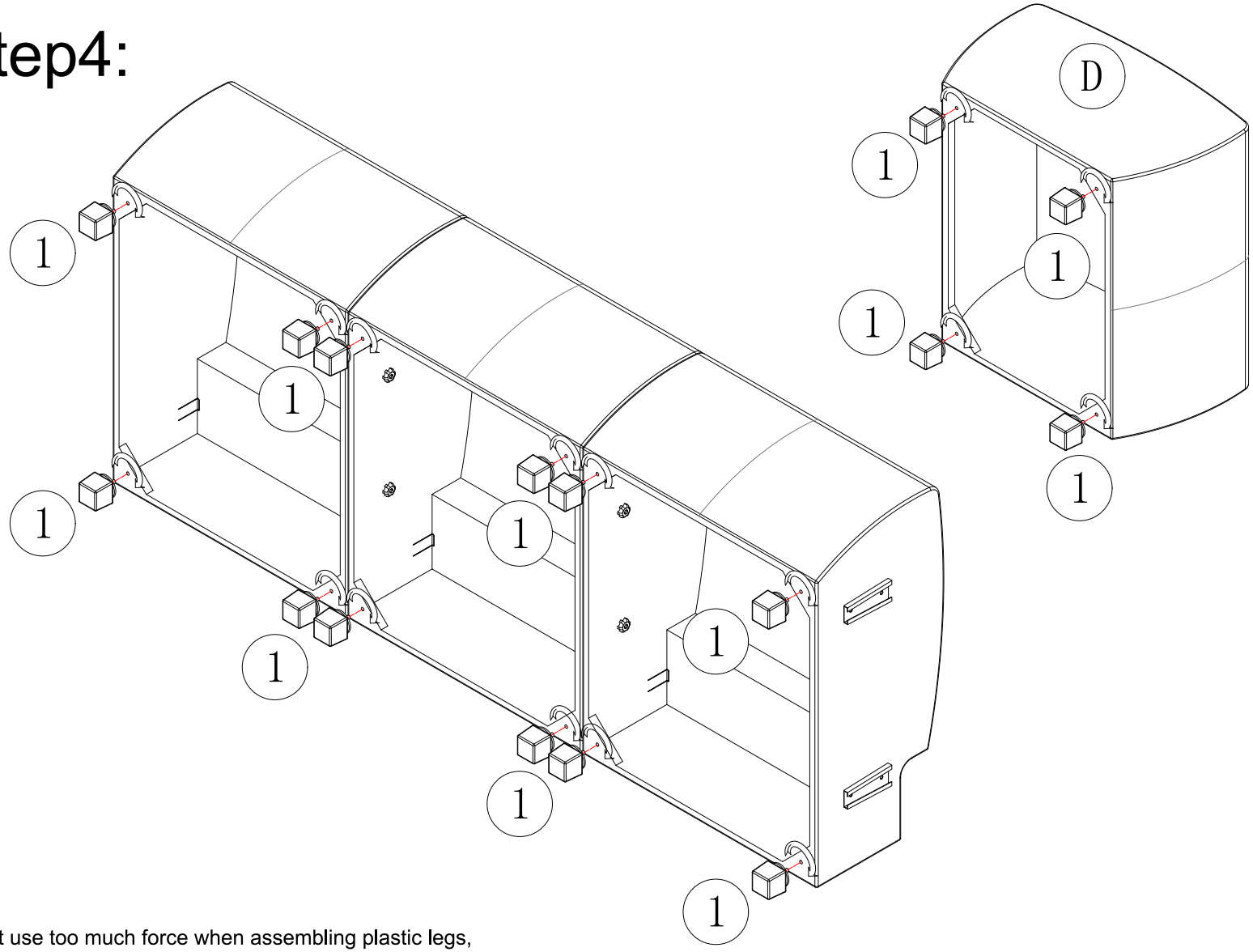

Do not use too much force when assembling plastic legs,
as it may cause fabric fuzzing.

Step5:

If the conical plug-in is difficult to assemble,
please shake it left and right, or reassemble it.

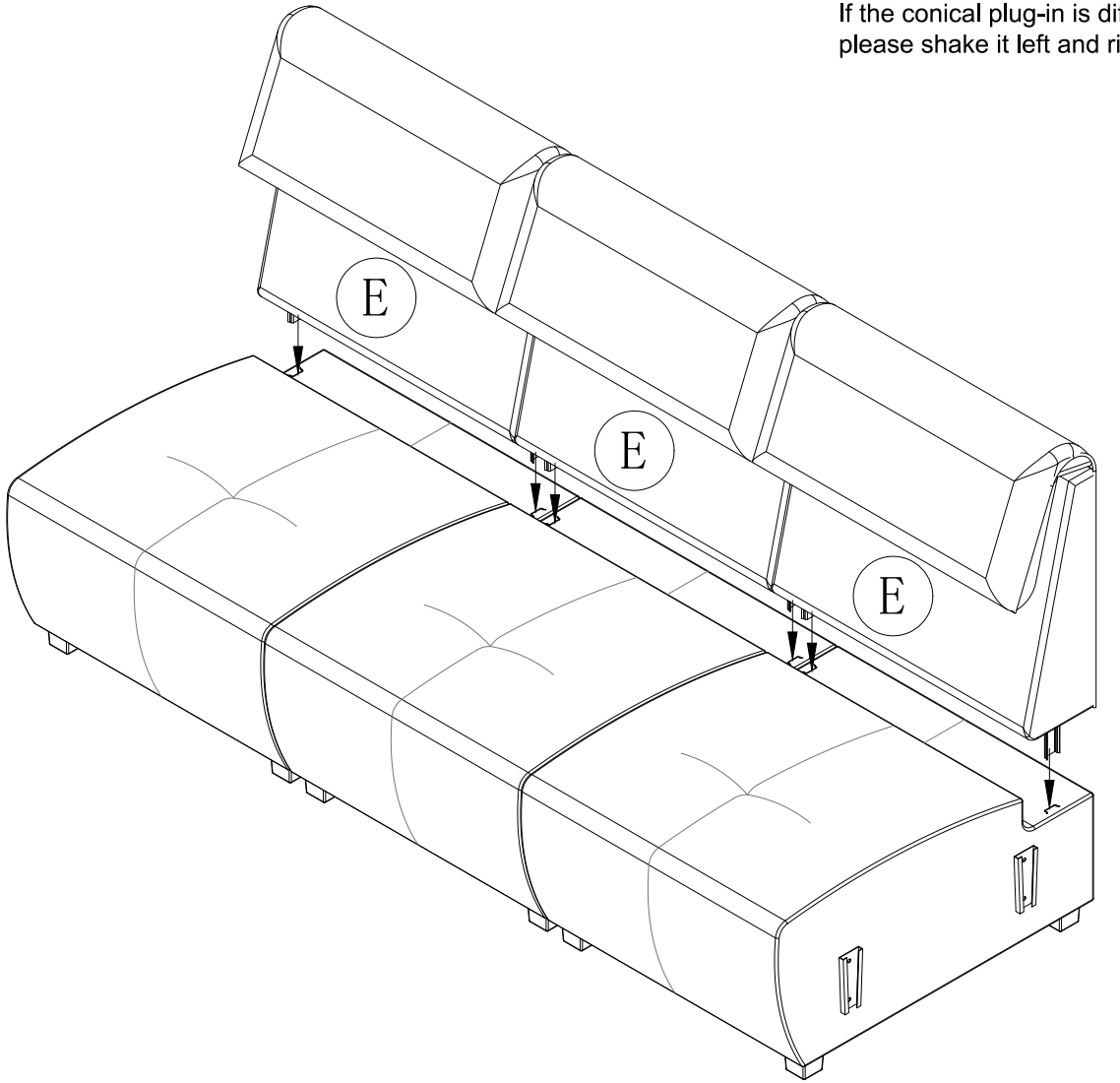

Step6:

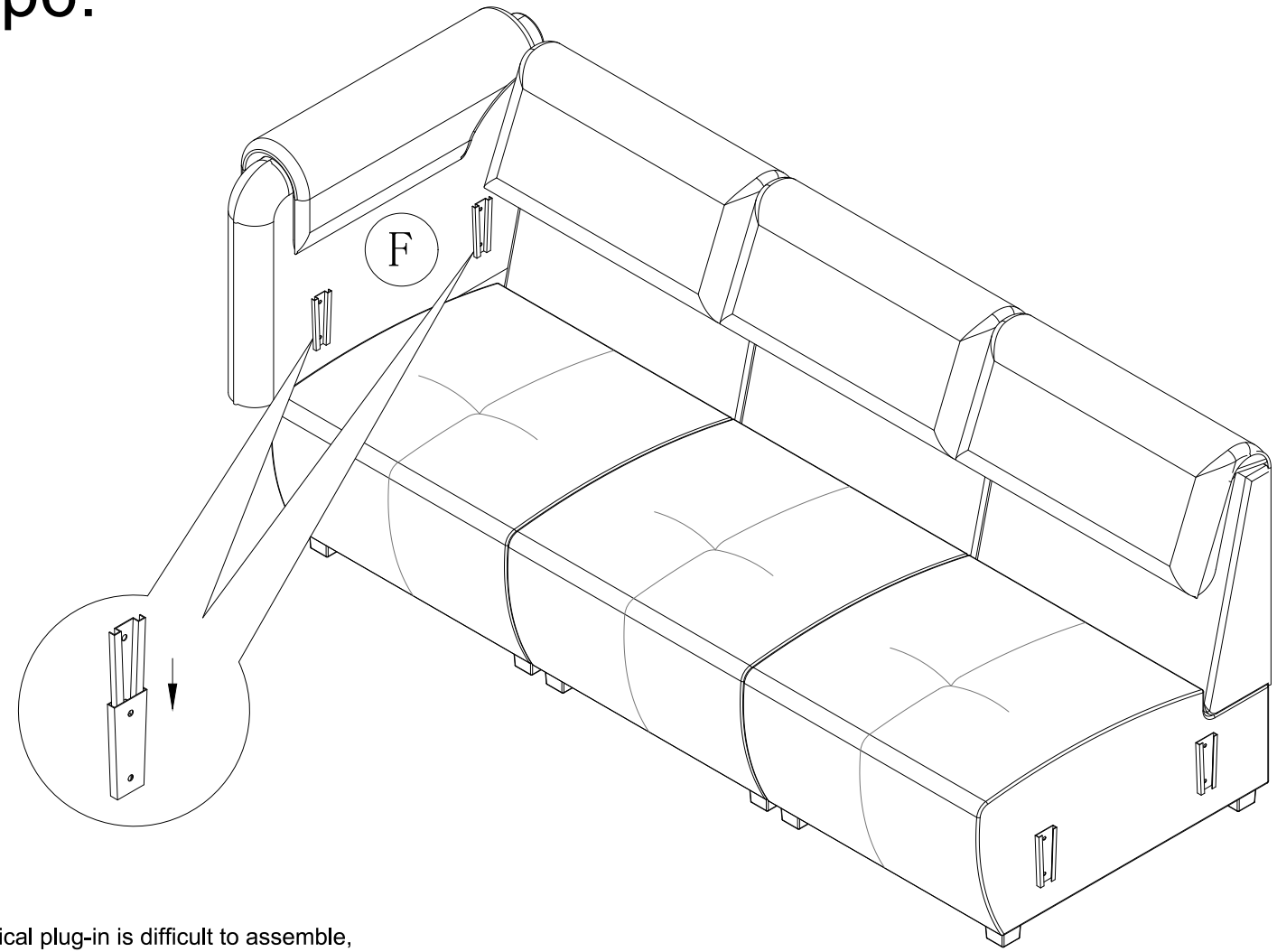

If the conical plug-in is difficult to assemble,
please shake it left and right, or reassemble it.

Step7:

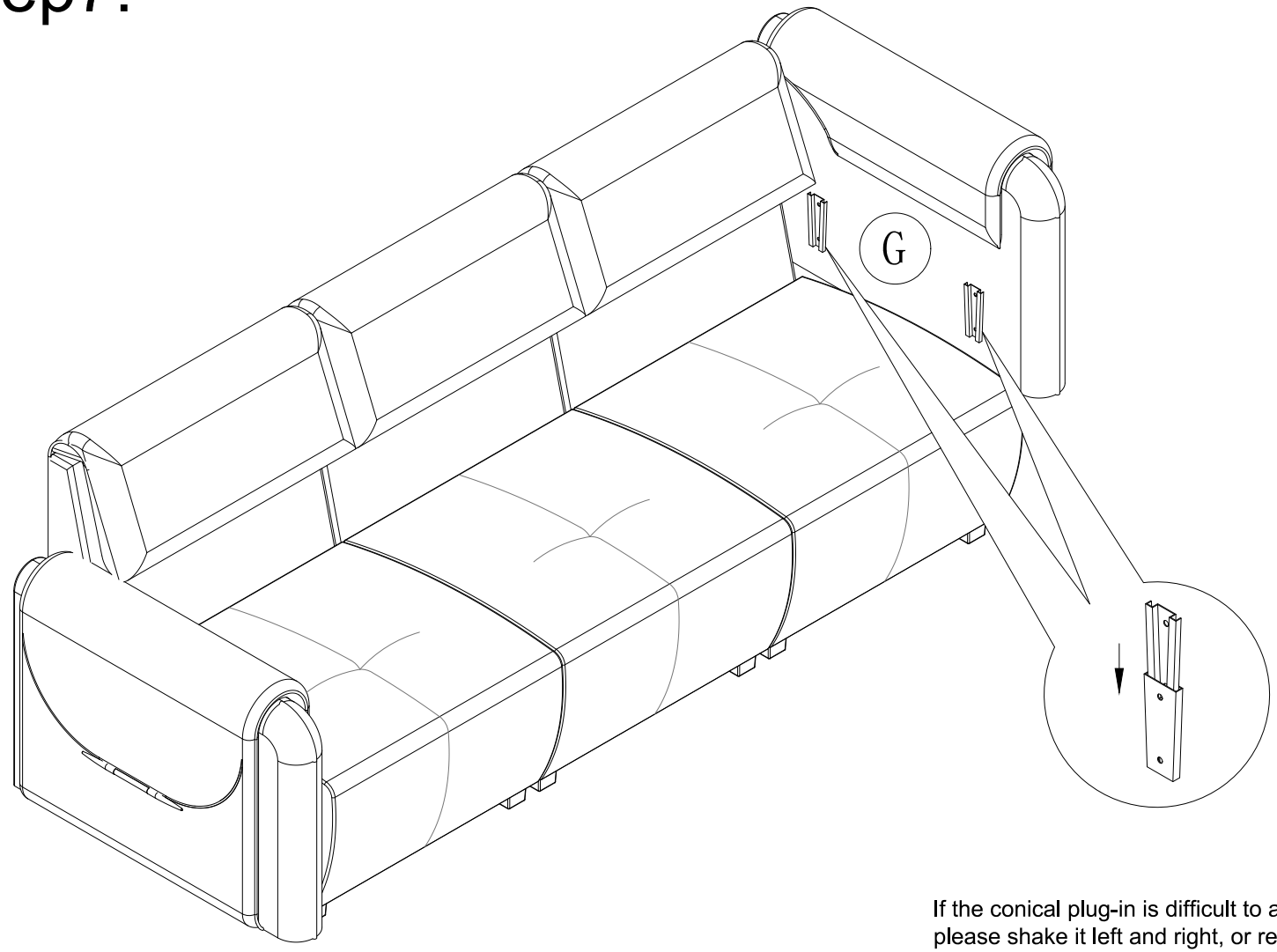

If the conical plug-in is difficult to assemble,
please shake it left and right, or reassemble it.

Step8:

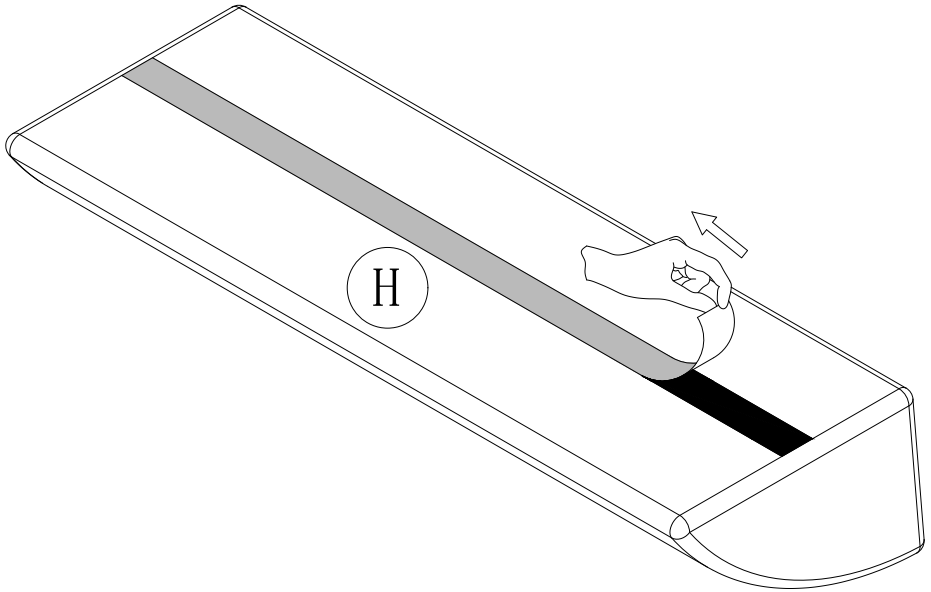

Note:
This product has Velcro on the Lumbar Pillow .
There are one cloth strips on the Velcro. During the installation process,
be careful to tear off the cloth strips and just throw them away.
The purpose of the cloth strips is to prevent the accessories from adhering to each other.
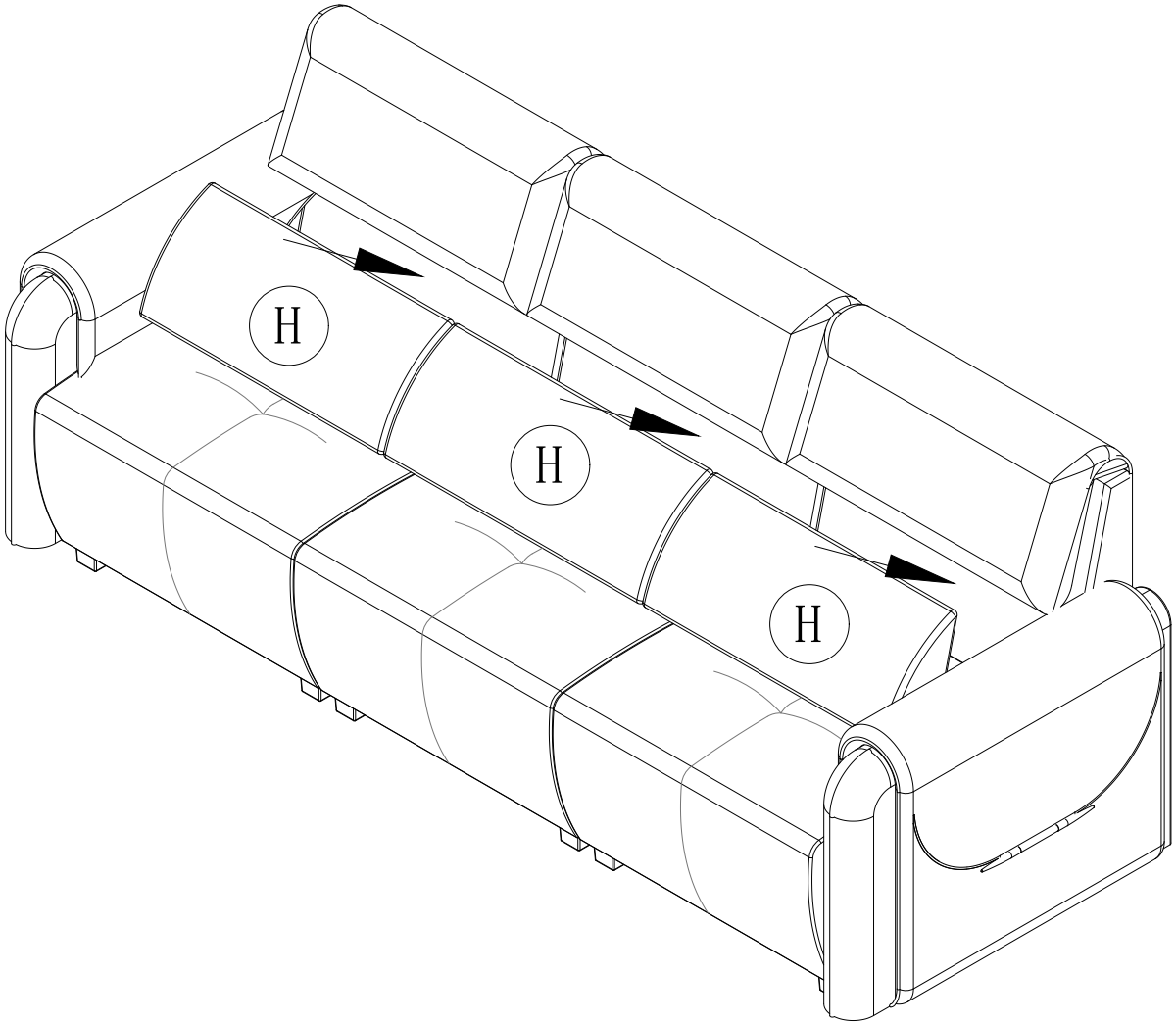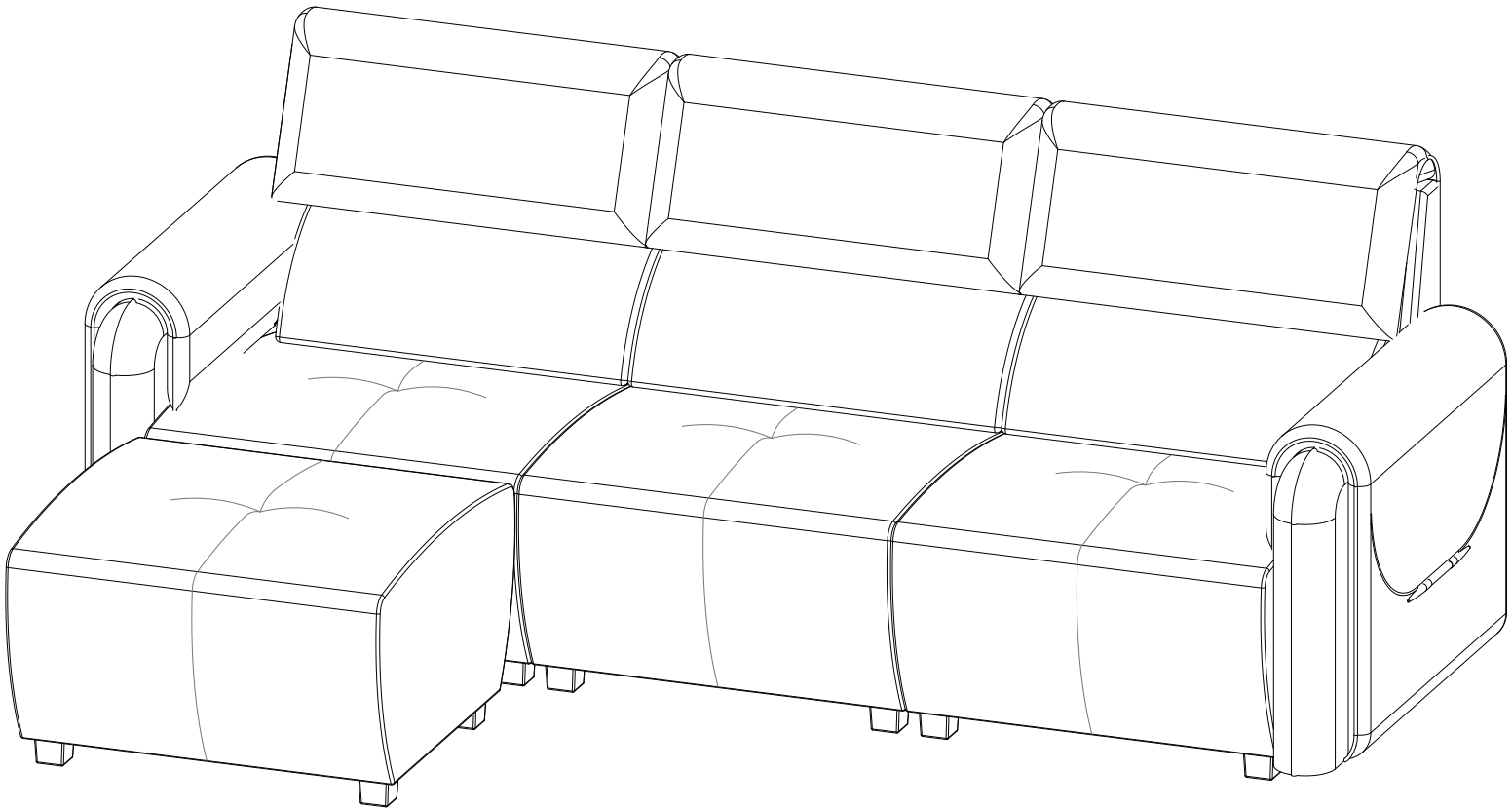
Step9: