7607T33 ASSEMBLY INSTRUCTIONS



ALOADÉCOR
THE ART OF LIGHTING



ALOADÉCOR
THE ART OF LIGHTING

Installation instructions:

Step 1.**Remove** all packaging material from the product and be carful not to throw away accessories that may be hidden within the packaging material.

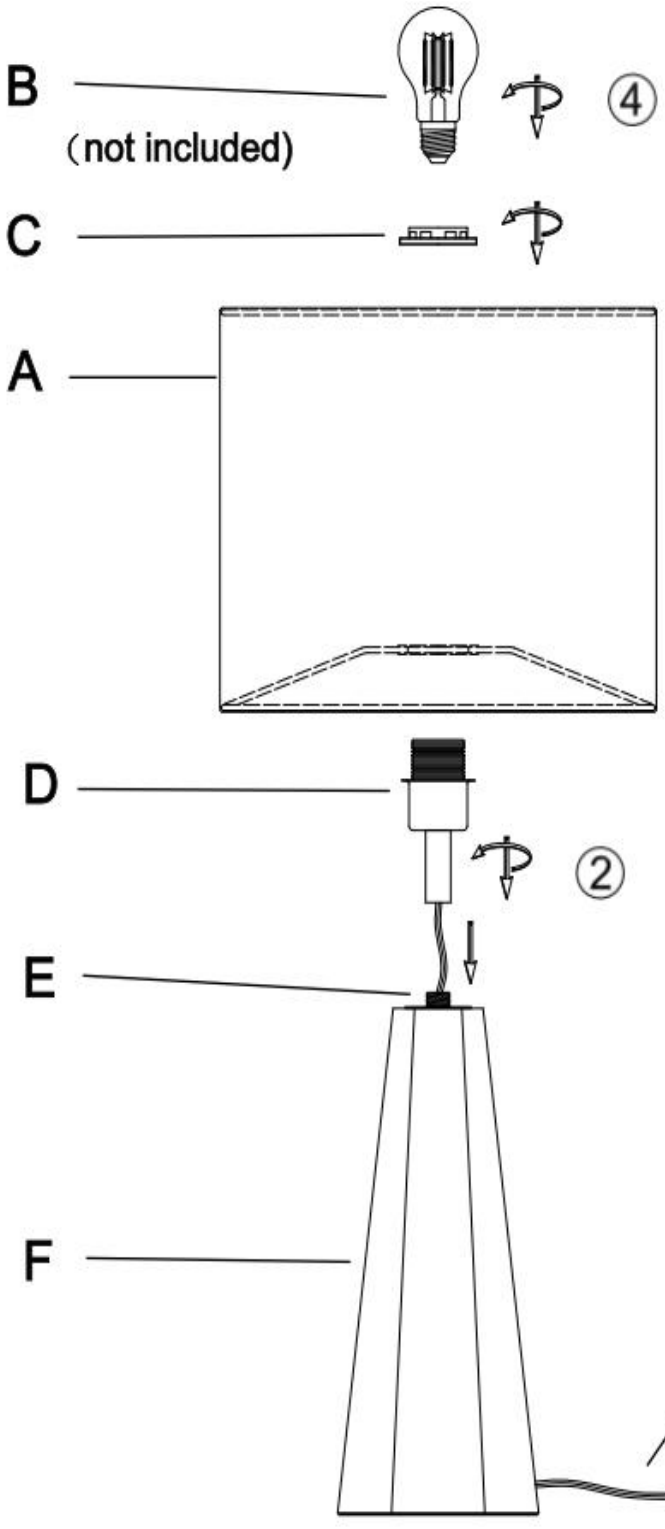

Step 4. Install the E26 LED bulb 1 pc (B not included) into the lamp holder (D).

Step 3. Place the lampshade (A) over the lamp holder (D) of the lamp body (F) and secure the lampshade (A) with the outer ring (C).

Step 2. As shown in the diagram, gently pull the power cord (G) outward to bring the lamp holder (D) close to the lamp body (F). Then screw the lamp holder (D) onto the lamp body (F) and tighten it with the threaded section (E).

Step 5.Plug the power cord (G) into the power outlet, turn on the inline switch,and light will come on.

ALOADÉCOR
THE ART OF LIGHTING

Disclaimer&Warranty

Disclaimer:

Thank you for your purchase.Please read carefully and keep these instructions,as you may need them later.We suggest installation by a **licensed electrician**.

Beware of potential electrical shock!Before installing the fixture or removing any other light already

If your product contains glass items,please handle with care,as glass is fragile and can lead to injuries if handled incorrectly.

Please keep in mind that the warnings and instructions present in this document are not meant to cover and prevent all possibilities and situations that could lead to injury or damage.It is the responsibility of the end-user to exercise caution and common sense when handling and installing the product.

1-YEAR LIMITED WARRANTY

The manufacturer warrants this product to be free from defects in materials and workmanship for one (1) year from the date of purchase. This warranty is valid only for the original consumer purchaser and covers the product under normal use and conditions. If the product is found to be defective, the manufacturer's sole obligation and your exclusive remedy is to repair or replace the product at the manufacturer's discretion, provided it has not been damaged by misuse, abuse, accident, alteration, modification, negligence, or mishandling.

This warranty does not cover labor or any costs associated with the removal or installation of defective, repaired, or replaced products. The warranty excludes damages resulting from misuse, mishandling, misapplication, negligence (including improper maintenance), accidents, incorrect installation, modifications (including unauthorized parts or accessories), or adjustments and repairs.

If you experience damage or missing accessories during the warranty period, please contact our customer service team at Service@aloadecor.com with your original order number, the quantity of required accessories, and your current shipping address. We will arrange for the free replacement parts as needed.

Need to contact us?
Please send an email at:
service@aloadecor.com

Need more information?
Please visit our website:
www.aloadecor.com

ALOADÉCOR
THE ART OF LIGHTING