ITEM #5971308/6245874/6245876
MODEL #COV52BNK5L/COV52MBK5L/COV52WW5L

AMBERWOOD CEILING FAN

HARBOR BREEZE and logo design are trademarks or registered trademarks of LF, LLC. All rights reserved.

Español p. 20

ATTACH YOUR RECEIPT HERE
ADJUNTE SU RECIBO AQUÍ

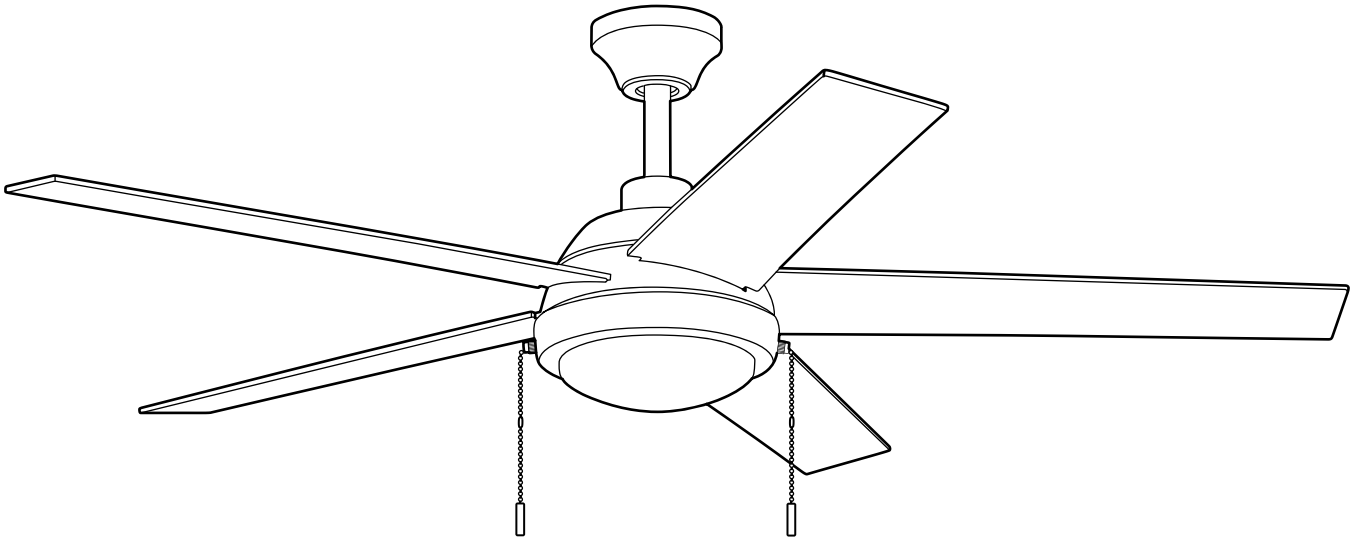

ETL LISTED US
Intertek
4007498

Purchase Date _____

Thank you for purchasing this HARBOR BREEZE product.
Questions, problems, missing parts?
Before returning, contact us on:
888-251-1003, 8 a.m-8 p.m., EST, Monday-Sunday.

TABLE OF CONTENTS

Safety Information 2

Package Contents 5

Hardware Contents 6

Preparation 6

Initial Installation 6

Wiring 11

Final Installation 13

Operating Instructions 16

Care and Maintenance 17

Troubleshooting 18

Limited Lifetime Warranty 19

Replacement Parts List 19

⚠ SAFETY INFORMATION

⚠ **CAUTION:** Changes or modifications not approved by the party responsible for compliance could void the user's authority to operate the equipment.

***NOTE:** This equipment has been tested and found to comply with the limits for a Class B digital device, pursuant to Part 15 of the FCC Rules. These limits are designed to provide reasonable protection against harmful interference in a residential installation. This equipment generates, uses and can radiate radio frequency energy and, if not installed and used in accordance with the instructions, may cause harmful interference to radio communications. However, there is no guarantee that interference will not occur in a particular installation. If this equipment does cause harmful interference to radio or television reception, which can be determined by turning the equipment off and on, the user is encouraged to try to correct the interference by one or more of the following measures:

* Reorient or relocate the receiving antenna.
* Increase the separation between the equipment and receiver.
* Connect the equipment into an outlet on a circuit different from that to which the receiver is connected.

Consult the dealer or an experienced radio/TV technician for help.

Distributed by: Litex Industries Inc., P.O. Box 535639, Grand Prairie, TX, 75053; 800-527-1292

The device complies with Part 15 of the FCC Rules. Operation is subject to the following two conditions: (1) this device may not cause harmful interference, (2) this device must accept any interference received, including interference that may cause undesired operation.

NOTE: Dimmable to 10% with select dimmers. See Lowes.com for more information.

SAFETY INFORMATION

READ AND SAVE THESE INSTRUCTIONS

Please read and understand this entire manual before attempting to assemble, install or operate the product. Review the accompanying assembly diagrams.

- Do not discard fan carton or packing material. Should this fan need to be returned to the factory for repairs, it must be shipped in its original packaging to ensure proper protection against damage that might exceed the initial cause for return.
- Make sure all electrical connections comply with local codes, ordinances, the National Electrical Code and ANSI/NFPA 70-1999. Hire a qualified electrician or consult a do-it-yourself wiring handbook if you are unfamiliar with installing electrical wiring.
- Make sure the installation site you choose allows a minimum clearance of 7 ft. from the blades to the floor and at least 30 in. from the end of the blades to any obstruction.
- After you install the fan, make sure all connections are secure to prevent the fan from falling.
- The net weight of this fan including the light kit is: 14.55 lbs.

⚠ DANGER

When using an existing outlet box, make sure the outlet box is securely attached to the building structure and can support the full weight of the fan. Failure to do this can result in serious injury or death. The stability of the outlet box is essential in minimizing wobble and noise in the fan after installation is complete.

To reduce the risk of serious bodily injury, DO NOT use power tools to assemble any part of the fan, including the blades.

Before installation, be sure to shut off electricity at main switch or circuit breaker in order to avoid electrical shock.

⚠ WARNING

To reduce the risk of fire, electrical shock or personal injury, mount fan to outlet box marked "ACCEPTABLE FOR FAN SUPPORT OF 35 LBS. (15.9 KG) OR LESS" and use mounting screws provided with the outlet box. Most outlet boxes commonly used for the support of lighting fixtures are not acceptable for fan support and may need to be replaced. Consult a qualified electrician if in doubt.

When mounting fan to a ceiling outlet box, use a METAL octagonal outlet box; do NOT use a plastic outlet box. Secure the outlet box directly to the building structure. The outlet box and its support must be able to support the moving weight of the fan (at least 35 lbs.).

To avoid personal injury, the use of gloves may be necessary while handling fan parts with sharp edges.

SAFETY INFORMATION

⚠ WARNING

To reduce the risk of fire, electrical shock or personal injury, lever wire connectors provided with this fan are designed to accept only one 12-gauge house wire and one lead wire from the fan. If your house wire is larger than 12-gauge or there is more than one house wire to connect to the corresponding fan lead wires, consult an electrician for the proper size lever wire connectors to use.

To reduce the risk of fire or electrical shock, do not use the fan with any solid state speed control device or control fan speed with a full range dimmer switch.

To reduce the risk of fire, electrical shock or personal injury, do not bend the blade arms when installing them, balancing the blades or cleaning the fan. Do not insert objects between the rotating fan blades.

To reduce the risk of personal injury, use ONLY parts provided with this fan. The use of parts OTHER than those provided with this fan will void the warranty.

⚠ CAUTION

Be sure outlet box is properly grounded and that a ground wire (green or bare) is present.

Once installation is complete, carefully check all screws, bolts and nuts on fan motor assembly to ensure that they are secured.

Do NOT tamper with or attempt to repair LED component. The light source is designed for this specific application and should not be serviced by untrained personnel. If any servicing is required, call our customer service department.

PACKAGE CONTENTS

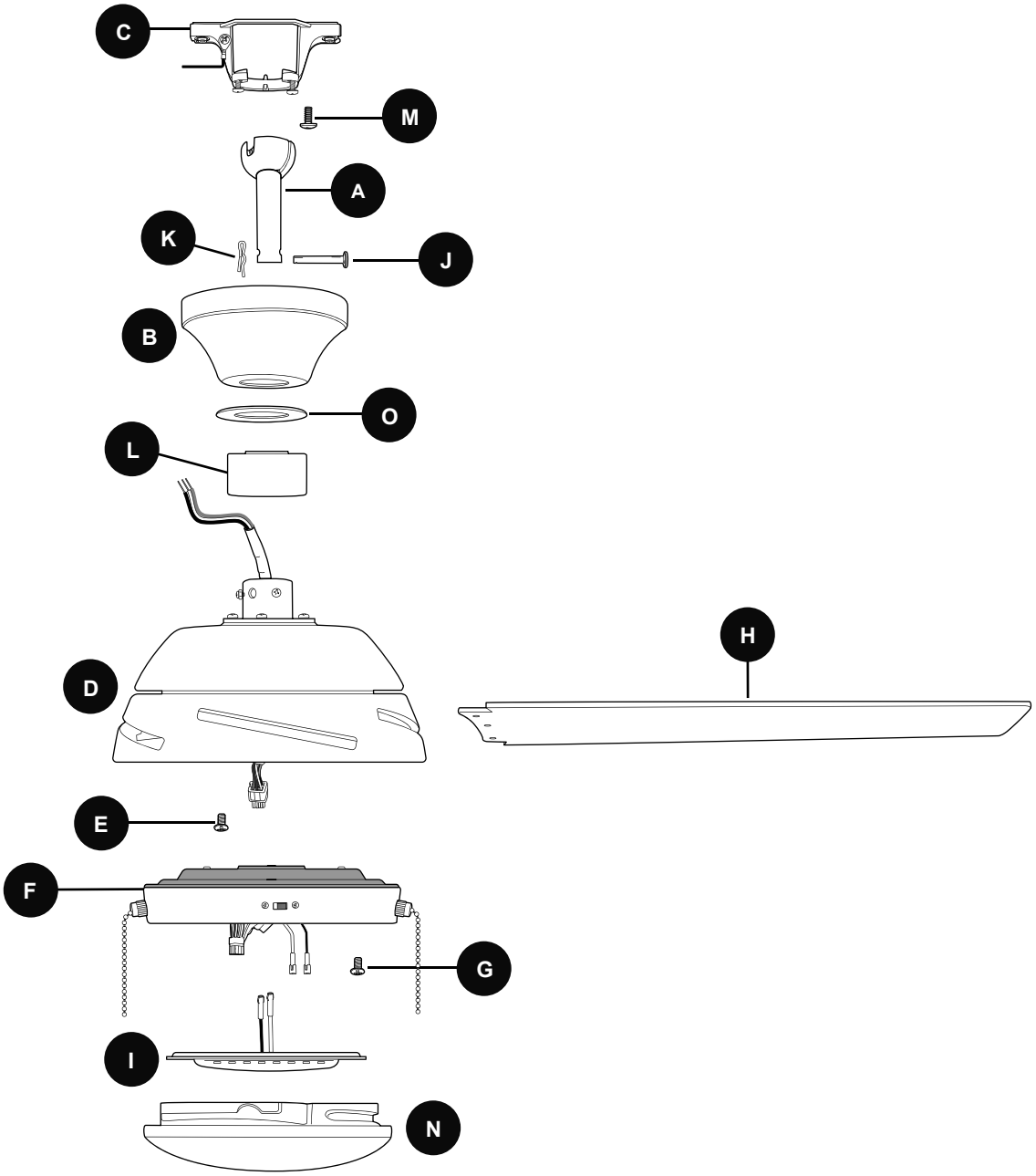

PART	DESCRIPTION	QUANTITY
A	Downrod	1
B	Canopy	1
C	Mounting Bracket	1
D	Motor Housing	1
E	Motor Plate Screw (preassembled)	3
F	Switch Housing	1
G	Switch Housing Screw (preassembled)	3
H	Blade	5

PART	DESCRIPTION	QUANTITY
I	LED Light Kit	1
J	Pin (preassembled)	1
K	Clip (preassembled)	1
L	Yoke Cover	1
M	Canopy Mounting Screw (preassembled)	2
N	Shade	1
O	Canopy Cover	1

⚠ **IMPORTANT:** You must use the parts provided with this fan for proper installation and safety.

HARDWARE CONTENTS (shown actual size)

AA



Blade Screw

Qty. 15 + 1 extra

BB

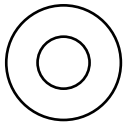

Fiber Blade Washer

Qty. 15 + 1 extra

CC

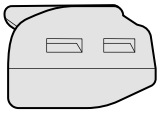

Lever Wire Connector

Qty. 4

DD

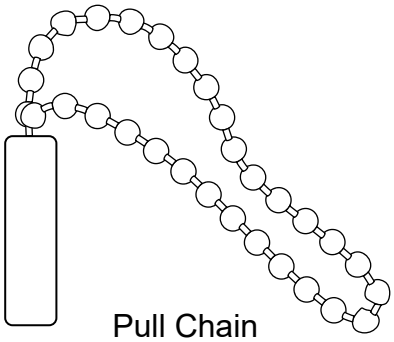

Pull Chain Extension

Qty. 2

PREPARATION

Before beginning assembly of product, make sure all parts are present. Place motor on carpet or on foam to avoid damage to finish. Compare parts with package contents list and hardware contents list. If any part is missing or damaged, do not attempt to install the product.

Estimated Assembly Time: 120 minutes

Tools Required for Assembly (not included): Electrical Tape, Phillips Screwdriver, Pliers, Safety Glasses, Stepladder and Wire Strippers

Helpful Tools (not included): AC Tester Light, Tape Measure, Do-It-Yourself Wiring Handbook and Wire Cutters

INITIAL INSTALLATION

1. Turn off circuit breakers or fuse and wall switch to the fan supply line leads.

   ⚠ **DANGER**: Failure to disconnect power supply prior to installation may result in serious injury or death.

1

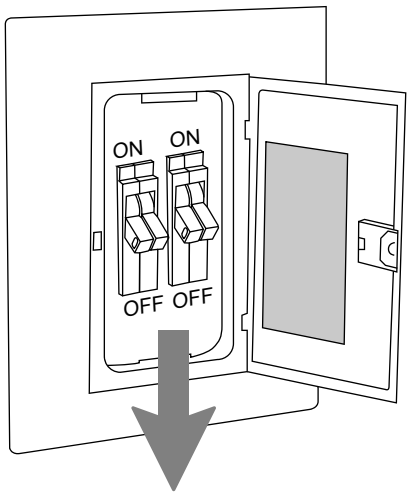

INITIAL INSTALLATION

2. If applicable, remove existing fan and fan parts, including the mounting bracket, from outlet box and disconnect all electrical wiring.

   ⚠ **WARNING:** To reduce the risk of personal injury, use ONLY parts provided with your new fan. The use of parts OTHER than those provided with this fan will void the warranty.

   Set aside screws, spring washers and flat washers (provided with the outlet box) for fan installation.

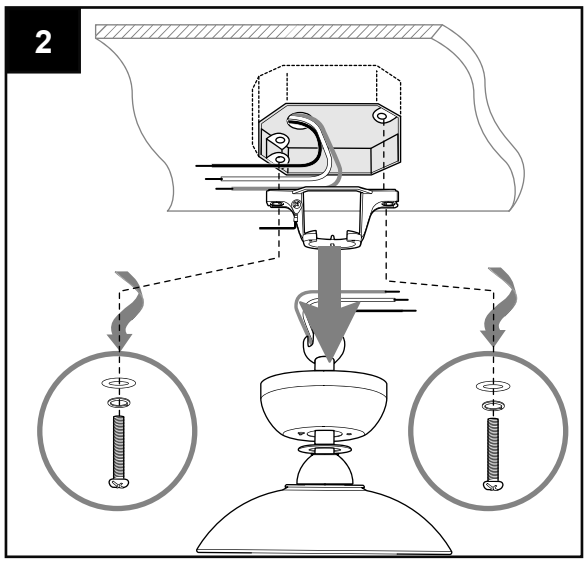

3. Determine mounting method to use for new fan.
   A. Standard mount
   B. Angle mount

   IMPORTANT: If using the angle mount, ensure the ceiling angle is not steeper than 19°.

   NOTE: Closemount option is not available for this fan.

   ***Helpful Hint:** Downrod-style mounting is best suited for ceilings 8 ft. high or higher. For taller ceilings you may want to use a longer downrod (not included). Angle-style mounting is best suited for angled or vaulted ceilings. A longer downrod is sometimes necessary to ensure proper blade clearance.

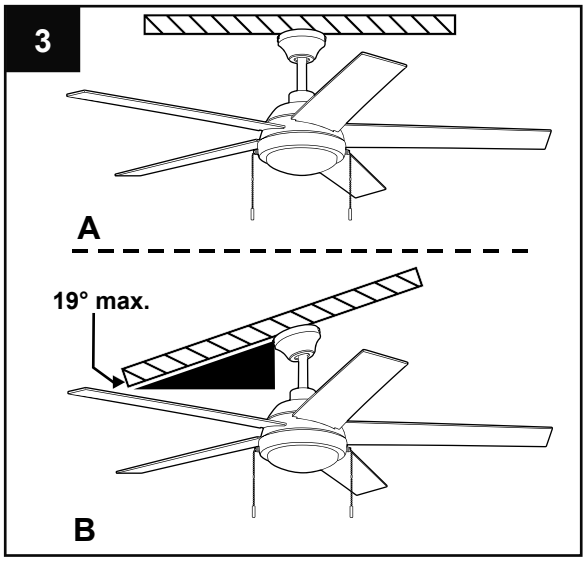

4. Check to make sure blades (H) will be at least 30 inches from any obstruction. Check downrod (A) length to ensure blades (H) will be at least 7 ft. above the floor.

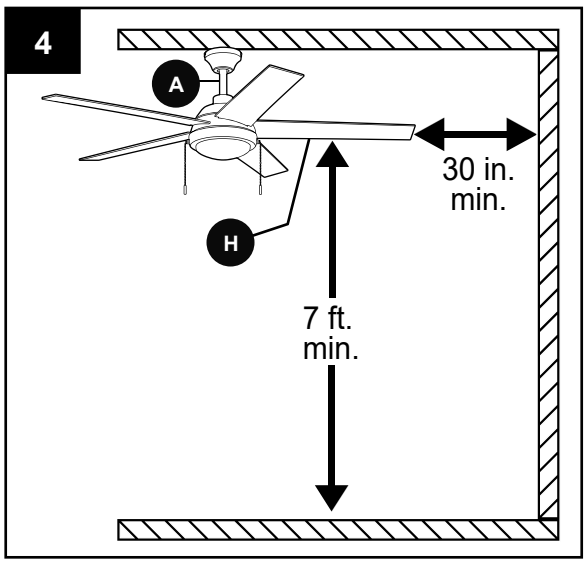

INITIAL INSTALLATION

5. Secure mounting bracket (C) to outlet box (not included) using the screws, spring washers and flat washers provided with the outlet box. [These may have already been removed in Step 2, page 7.]

   For proper installation of the mounting bracket (C), make sure to observe the CORRECT screw position in Fig. 5a while also taking into account the INCORRECT screw position seen in Fig. 5b.

   ⚠ **WARNING:** It is very important you use the proper hardware when installing the mounting bracket as this will support the fan.

   IMPORTANT: If using the angle mount, make sure open end of mounting bracket (C) is installed facing the higher point of the ceiling, and ensure the ceiling angle is not steeper than 19°.

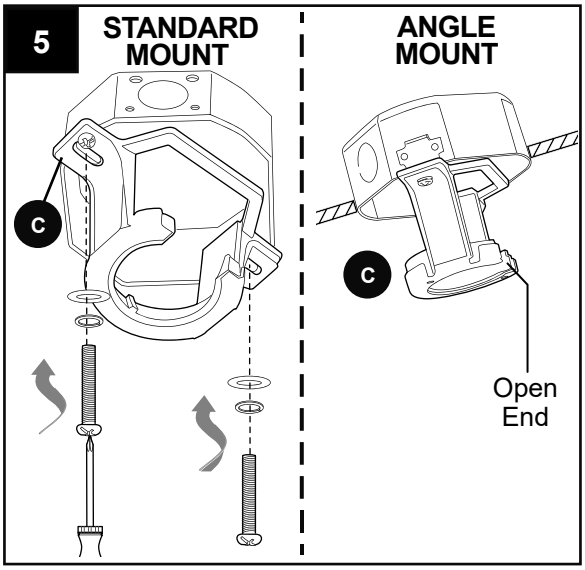

5a. ⚠ **DANGER:** To reduce the risk of serious injury or death, the outlet box screws MUST be installed somewhere within the long slots of the mounting bracket and then TIGHTENED DOWN COMPLETELY. [See Fig. 5a.]

5b. ⚠ **DANGER:** To reduce the risk of fire, electrical shock, serious personal injury or damage to the fan, make sure outlet box screws DO NOT get installed on or near the wall that separates the keyhole and the long, narrow slot on each side of the mounting bracket. [Refer to Fig. 5b.]

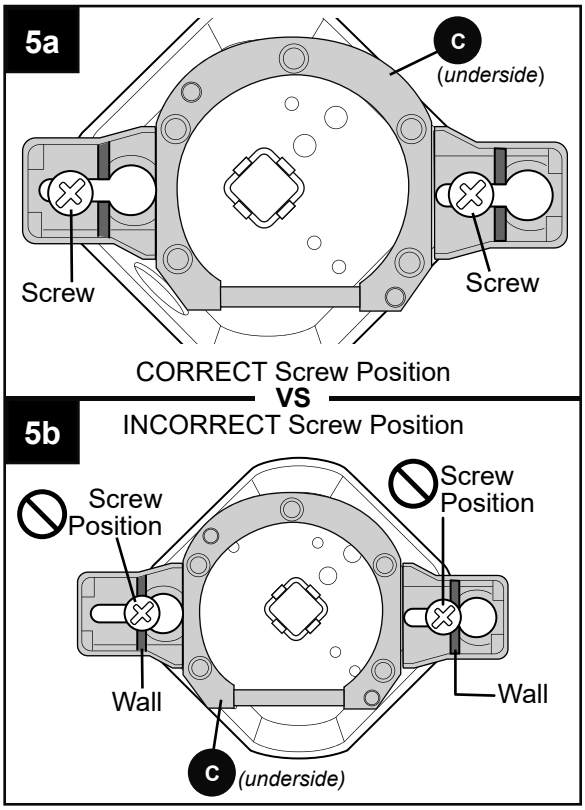

INITIAL INSTALLATION

6a. Remove pin (J) and clip (K) from downrod (A).

6b. Partially loosen preassembled set screws and nut in motor housing yoke at top of motor housing (D).

Remove all three preassembled motor stabilization pieces from motor housing (D). The motor stabilization pieces may be discarded at this time.

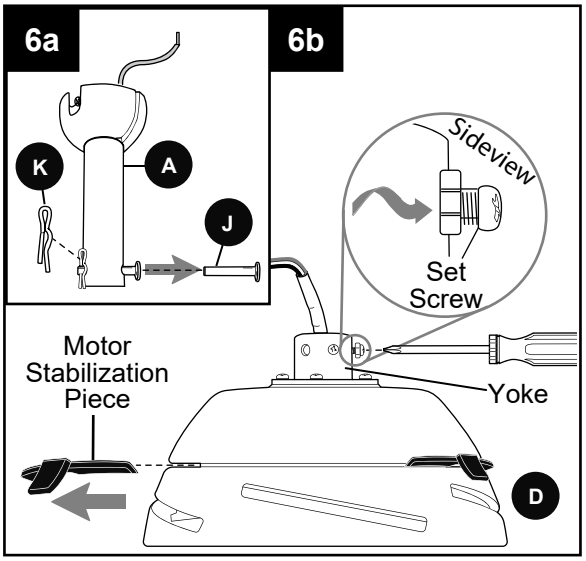

7. Insert downrod (A) through canopy (B), canopy cover (O and yoke cover (L). **NOTE:** Canopy cover (O) must be turned with the smooth side *toward* the motor housing (D).

Then, thread wires from motor housing (D) through downrod (A).

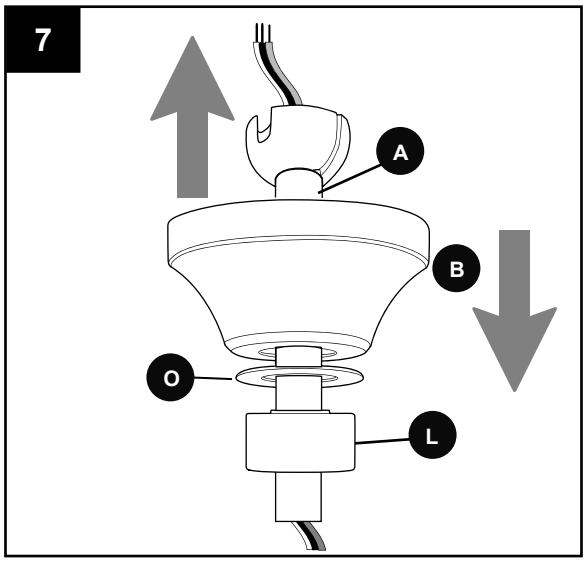

8. Slip downrod (A) into motor housing yoke, align holes and re-install pin (J) and clip (K). Tighten set screws in motor housing yoke and then tighten preassembled nut on one of the set screws. Then, slide yoke cover (L) down until it rests on top of motor housing (D).

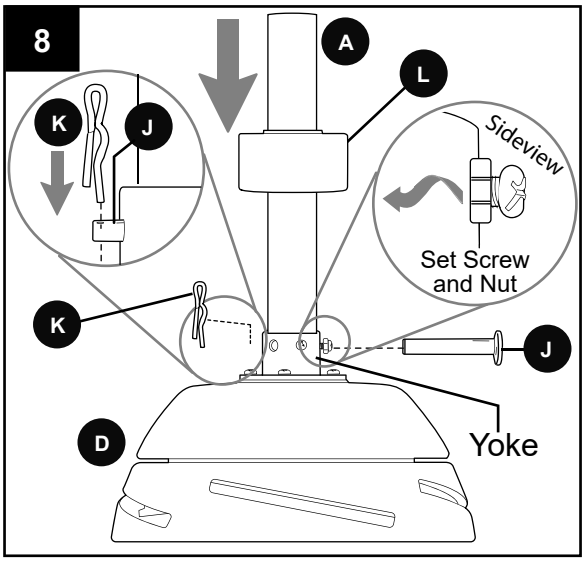

INITIAL INSTALLATION

9. Depending on the length of downrod you use, you may need to cut the lead wires back to simplify the wiring. If you decide to cut back the lead wires, it is suggested you do so in the following manner:

   Take the lead wires and make sure you have pulled them all the way through the top of the downrod. Start at the TOP of the hanging ball on the downrod and measure 8 in. of lead wire, then cut the excess wire off with wire cutters (not included).

   NOTE: If you do ***not*** cut back the lead wires, ***Steps 9 and 10 are not necessary and you may proceed to Step 11 instead***.

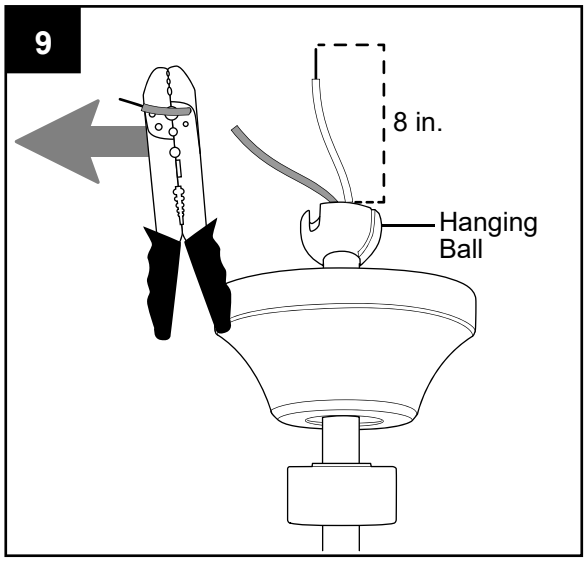

10. If you decided to cut back the lead wires in Step 9, strip 3/8 in. of insulation from end of each wire -- WHITE, BLACK, GREEN and BLUE (if applicable). Twist stripped ends of each strand of wire within the insulation with pliers (not included).

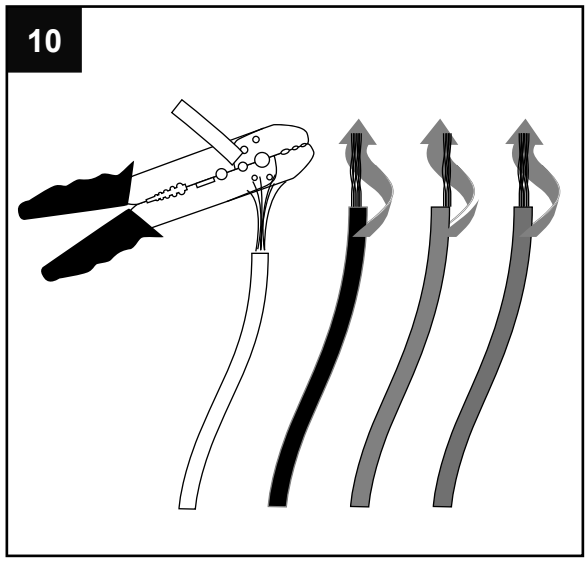

11. Install hanging ball of downrod (A) into opening of mounting bracket (C). Align one of the slots in hanging ball with tab in mounting bracket (C).

   ⚠ **DANGER:** Failure to align one of the slots in the ball with the tab may result in serious injury or death.

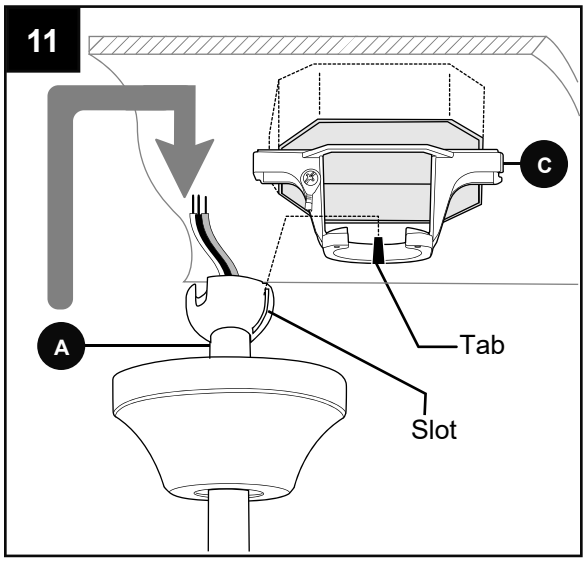

WIRING

WARNING: To reduce the risk of fire, electrical shock or personal injury, lever wire connectors provided with this fan are designed to accept only one 12-gauge house wire and one lead wire from the fan. If your house wire is larger than 12-gauge or there is more than one house wire to connect to the corresponding fan lead wires, consult an electrician for the proper size lever wire connectors to use.

CAUTION: Be sure outlet box is properly grounded and that a ground (GREEN or BARE) wire is present.

WARNING: If house wires are different colors than referred to in the following steps, stop immediately. A professional electrician is recommended to determine wiring.

WARNING: Using a full range dimmer switch (not included) to control fan speed will cause a loud humming noise from fan. To reduce the risk of fire or electrical shock, do NOT use a full range dimmer switch to control fan speed.

NOTE: This fan is remote control adaptable (remote control not included). Please refer to instructions provided with the remote control before proceeding with these wiring instructions.

1. **IMPORTANT:** Each wire connection is made by firmly raising the levers on each lever wire connector (CC), as shown. Then, ONE wire is inserted into each opening.

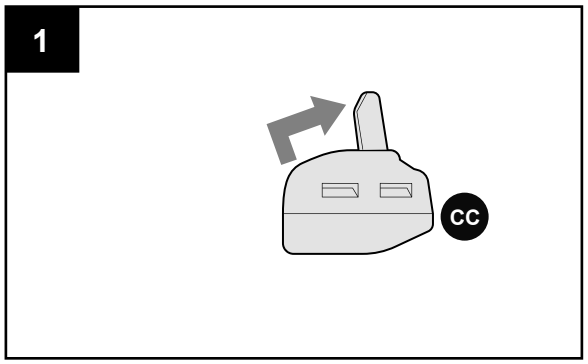

2. Choose wiring diagram (Fig. 2a, Fig. 2b or Fig. 2c) that fits your situation and make appropriate wiring connections per your selection in Step 2.

   WARNING: In order for wire connections to be secure, all levers on the lever wire connectors (CC) must be completely returned to their original position as shown in the wiring diagram, option 2a, 2b or 2c, which corresponds to your wiring needs.

   2a. **FAN AND LIGHT CONTROLLED BY PULL CHAINS:** Insert each GROUND (GREEN) wire from fan (on downrod (A) and mounting bracket (C)) and the BARE/GREEN wire from ceiling into openings in lever wire connector (CC) with three levers.
   Insert BLACK wire and BLUE wire from fan and BLACK wire from ceiling into openings in lever wire connector (CC) with three levers.
   Insert WHITE wire from fan and WHITE wire from ceiling into openings in lever wire connector (CC) with two levers.

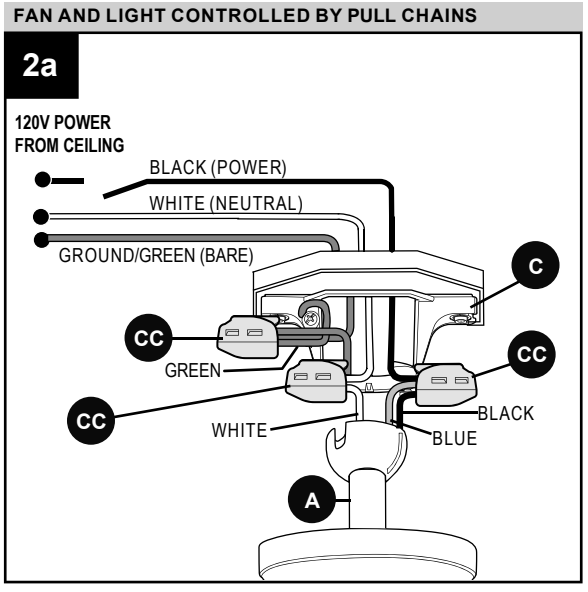

WIRING

2b. **FAN CONTROLLED BY PULL CHAIN, LIGHT BY WALL SWITCH:** Insert each GROUND (GREEN) wire from fan (on motor housing (D) and mounting bracket (C)) and the BARE/GREEN wire from ceiling into openings in lever wire connector (CC) with three levers.
Insert BLACK wire from fan and BLACK wire from ceiling into openings in lever wire connector (CC) with three levers.
Insert WHITE wire from fan and WHITE wire from ceiling into openings in lever wire connector (CC) with two levers.
Insert BLUE wire and BLACK (or RED) wire from the independent wall switch for the light into openings in lever wire connector (CC) with two levers.

FAN CONTROLLED BY PULL CHAIN, LIGHT BY WALL SWITCH

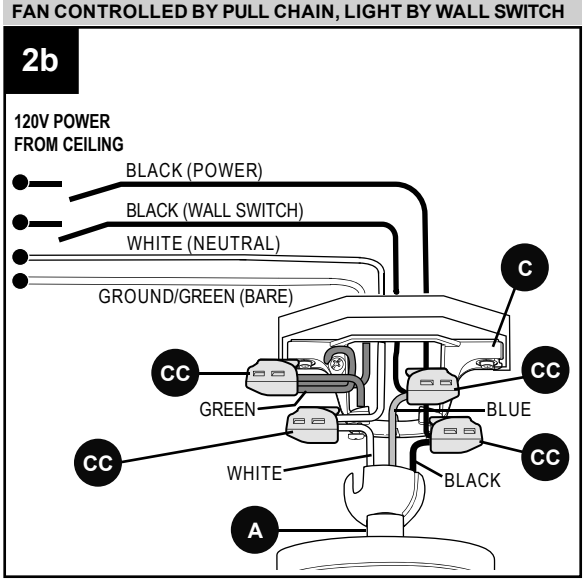

2c. **FAN AND LIGHT CONTROLLED BY TWO WALL SWITCHES:** Insert each GROUND (GREEN) wire from fan (on downrod (A) and mounting bracket (C)) and the BARE/GREEN wire from ceiling into openings in lever wire connector (CC) with three levers.
Insert BLACK wire from fan and BLACK (or RED) wire from the independent wall switch for the fan into openings in lever wire connector (CC) with three levers.
Insert BLUE wire from fan and BLACK (or RED) wire from the other independent wall switch for the light into openings in lever wire connector (CC) with two levers.
Insert WHITE wire from fan and WHITE wire from ceiling into openings in lever wire connector (CC) with two levers.

FAN AND LIGHT CONTROLLED BY TWO WALL SWITCHES

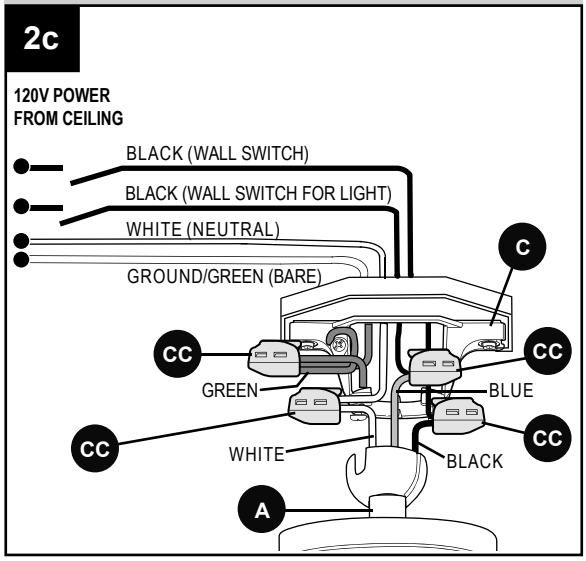

NOTE: BLACK wire is hot power for fan. BLUE wire is hot power for light kit. WHITE wire is common for fan and light kit. GREEN or BARE wire is ground.

⚠ **WARNING:** GENTLY pull on wire in each lever wire connector (CC) to confirm the lock is engaged and that all wires are secure.

3. Wrap electrical tape around each individual lever wire connector (CC) down to the wire.

   ⚠ **WARNING:** Make sure no bare wire or wire strands are visible after making connections. Place GREEN and WHITE connections on opposite side of box from the BLACK and BLUE (if applicable) connections.

   Turn spliced/taped wires upward and gently push wires and lever wire connectors (CC) into outlet box.

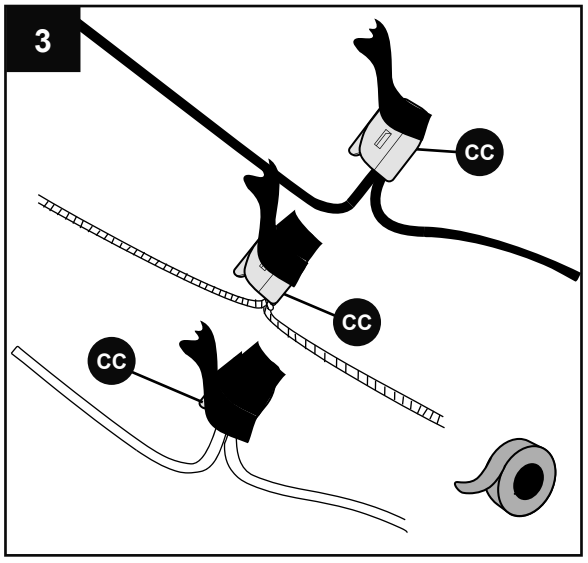

Hardware Used

CC	Lever Wire Connector	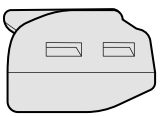	x 4

FINAL INSTALLATION

1. Locate two canopy mounting screws (M) on underside of mounting bracket (C) and remove canopy mounting screw (M) closest to the open end of the mounting bracket (C). Partially loosen the other canopy mounting screw (M). Lift canopy (B) to mounting bracket (C). Place rounded part of slotted hole in canopy (B) over loosened canopy mounting screw (M) and push up. Twist canopy (B) to lock. Re-insert canopy mounting screw (M) that was removed, then tighten both canopy mounting screws (M).

   Locate knobs on center ring of canopy cover (O). Slide canopy cover (O) up to canopy (B), aligning knobs on canopy cover (O) with notches in the center opening in bottom of canopy (B). Press up firmly on the canopy cover (O) until it fits into the bottom of the canopy (B) and then turn canopy cover (O) about 1/2 in.

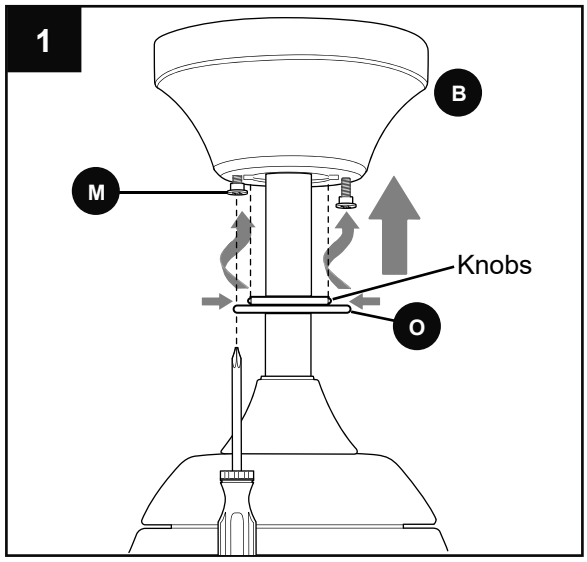

2. ⚠ **DANGER:** To reduce the risk of serious bodily injury, DO NOT use power tools to assemble the blades (H). If screws are overtightened, blades (H) may crack and break.

   Insert one blade (H) through a slot on the band of the motor housing (D). Align holes in blade (H) with holes in plate on underside of motor. Attach the blade (H) with blade screws (AA) and fiber blade washers (BB). Then, tighten each blade screw (AA), starting with the one in the middle. Repeat for remaining blades (H).

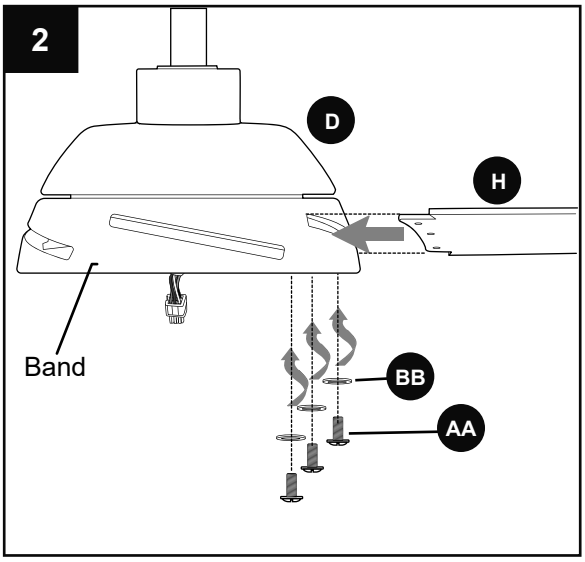

Hardware Used

AA	Blade Screw	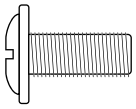	x 15
BB	Fiber Blade Washer	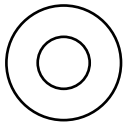	x 15

FINAL INSTALLATION

3. Remove one motor plate screw (E) from motor plate preassembled on the underside of the motor housing (D) and partially loosen the other two motor plate screws (E). Align slotted holes in switch housing (F) with loosened motor plate screws (E), allowing female plug from motor housing (D) to come through hole in switch housing (F). Twist switch housing (F) to lock. Re-insert the motor plate screw (E) that was removed and securely tighten all three motor plate screws (E).

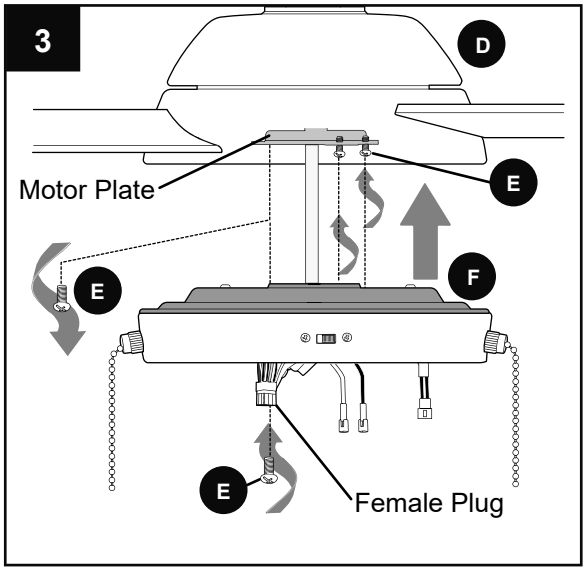

4. Remove one switch housing screw (G) from underside of switch housing (F) and partially loosen the other two switch housing screws (G).

   Connect female plug from motor housing (D) to male plug from switch housing (F), matching up the colors on the plugs for correct fit. Make sure plugs connect tightly.

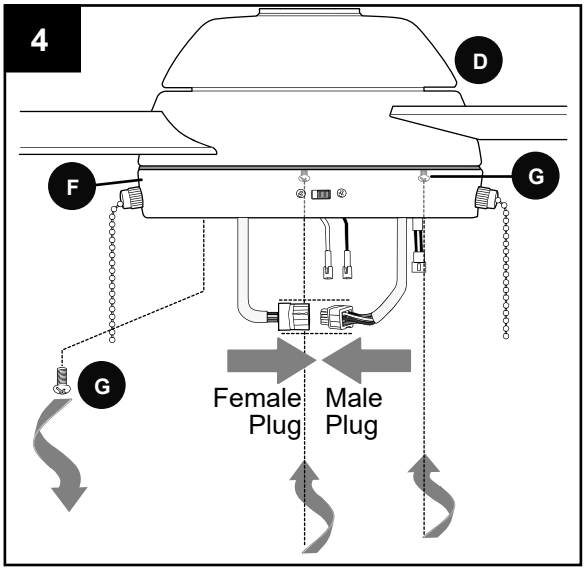

5. Locate BLUE and WHITE wires in switch housing (F). Connect WHITE wire from LED light kit (I) to WHITE wire from switch housing (F). Connect BLUE wire from LED light kit (I) to BLUE wire from switch housing (F). Make sure molex connections are secure.

   Connect two-wire molex plug from switch housing (F) to two-wire molex plug from LED light kit (I). Make sure molex plugs connect securely.

   Carefully arrange wires inside switch housing (F). Align slotted holes in LED light kit (I) with loosened switch housing screws (G) and twist LED light kit (I) to lock. Re-insert switch housing screw (G) previously removed and securely tighten all three switch housing screws (G).

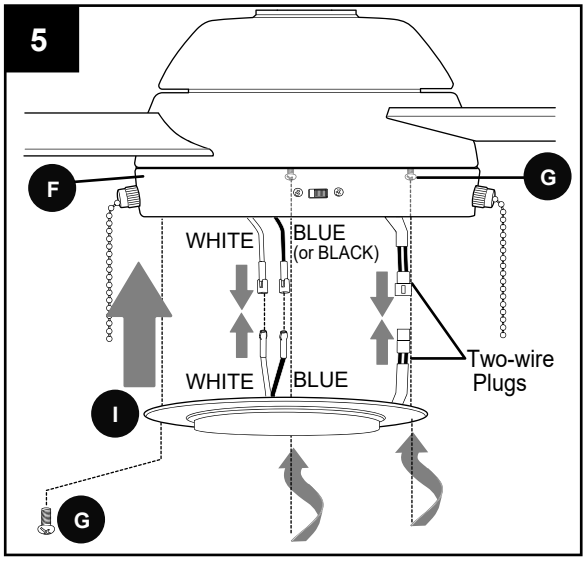

FINAL INSTALLATION

6. Align slots on shade (N) with protrusions on underside of switch housing (F). Turn shade (N) CLOCKWISE until it no longer turns.
   NOTE: Pull down gently on the shade (N) to make sure it is secured completely.

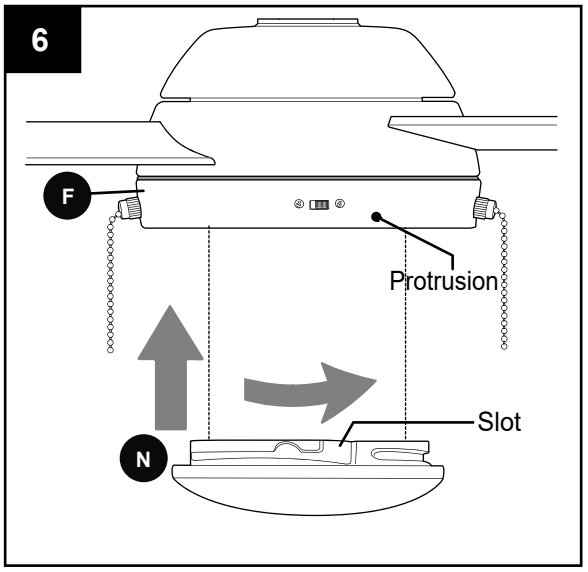

7. Attach pull chain extensions (DD) or custom pull chain extensions (not included) to corresponding fan and light pull chains.

Hardware Used

DD	Pull Chain Extension	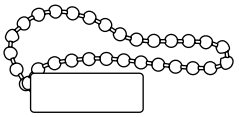	x 2

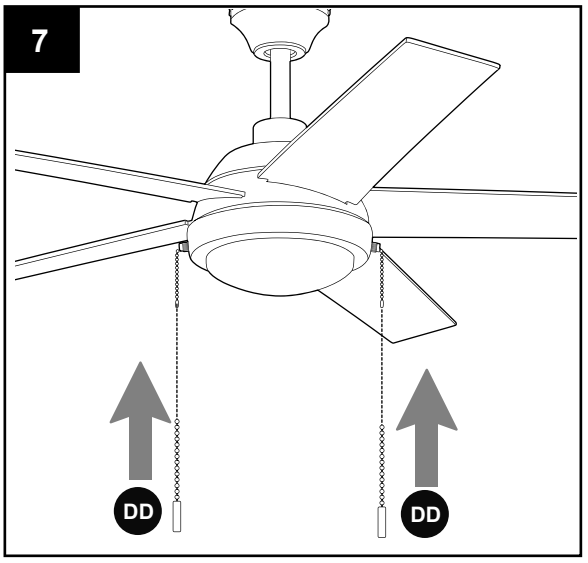

OPERATING INSTRUCTIONS

1. The pull chain located to the left of the reverse switch on the switch housing (F) is labeled FAN and has four positions to control fan speed. One pull is HIGH, two is MEDIUM, three is LOW and four turns the fan OFF.

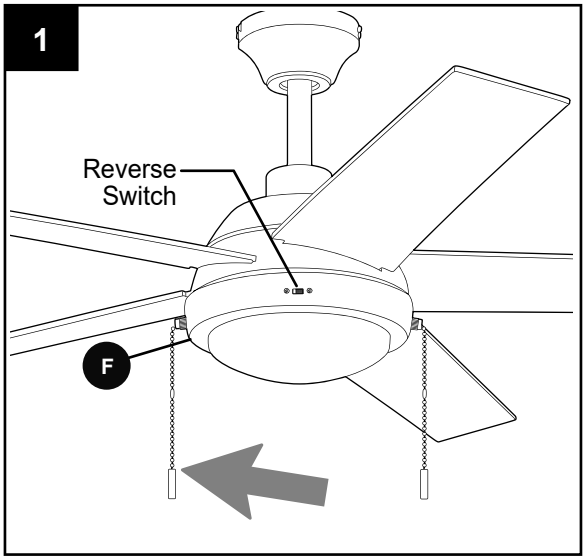

2. The pull chain located to the right of the reverse switch on the switch housing (F) is labeled LIGHT and is used to control the light.

   To turn the light ON or OFF, simply pull down on and then let go of the light pull chain.

   To use the COLOR MODE feature for the light, pull on and hold the light pull chain down. When the desired color temperature appears, let go of the pull chain.

   Color temperature settings:
   - soft white
   - warm white
   - cool white
   - daylight
   - cool daylight

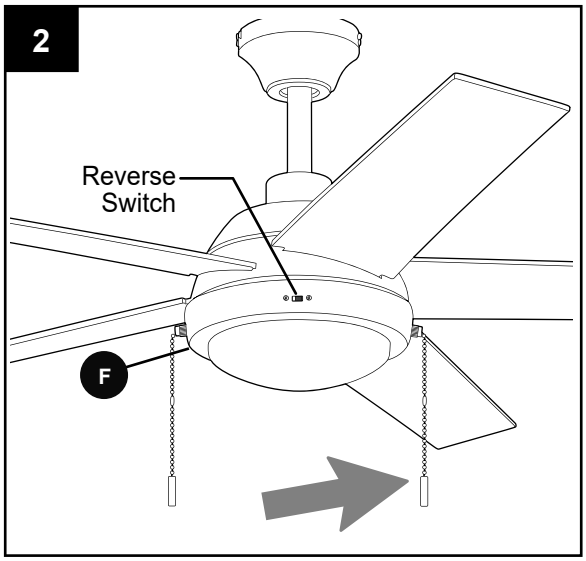

3. Use the fan reverse switch, located on the switch housing (F), to optimize your fan for seasonal performance. A ceiling fan will allow you to raise your thermostat setting in summer and lower your thermostat setting in winter without feeling a difference in your comfort.

   NOTE: Wait for fan to stop before moving the reverse switch.

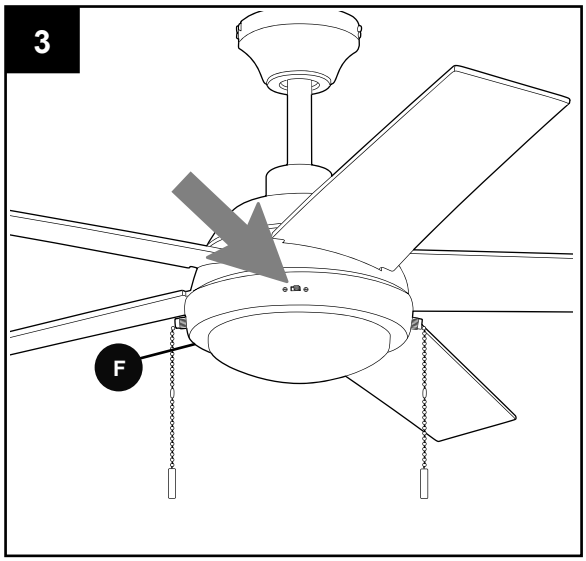

OPERATING INSTRUCTIONS

3a. In ***warmer*** weather, setting the reverse switch in the *LEFT* position will result in downward airflow creating a wind chill effect.

3b. In ***cooler*** weather, setting the reverse switch in the *RIGHT* position will result in upward airflow that can help move stagnant, hot air off the ceiling area.

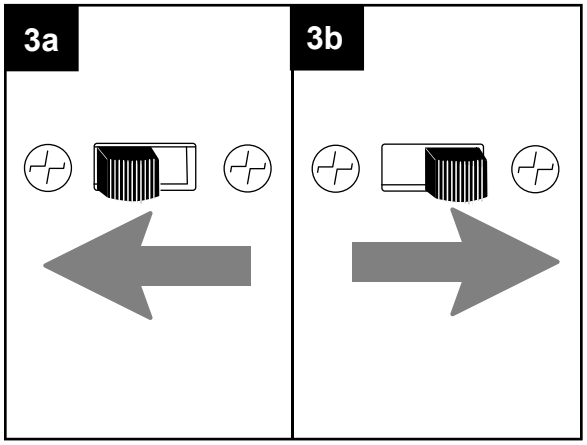

3c. **IMPORTANT**: Reverse switch must be set either ***completely*** *LEFT* or ***completely*** *RIGHT* for fan to function. If the reverse switch is set in the *middle* position, fan will not operate.

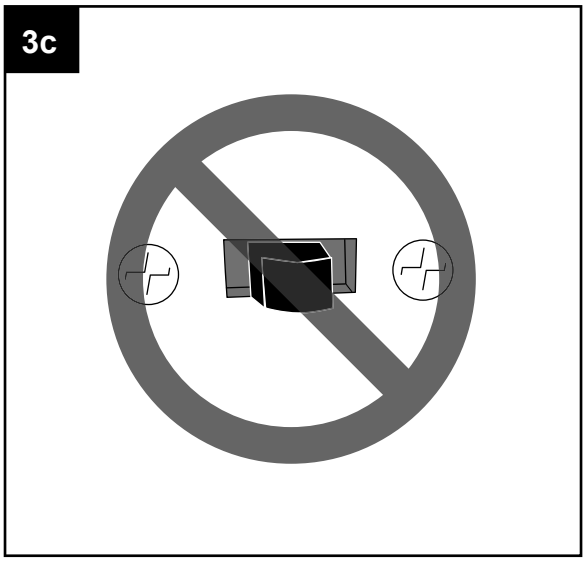

CARE AND MAINTENANCE

At least twice each year, lower canopy to check downrod assembly, and then tighten all screws on the fan. Clean motor housing with only a soft brush or lint-free cloth to avoid scratching the finish. Clean blades with a lint-free cloth. You may occasionally apply a light coat of furniture polish to wood blades for added protection.
IMPORTANT: Shut off main power supply before beginning any maintenance. Do not use water or a damp cloth to clean the ceiling fan.

Total wattage for the light kit for this fan is 20 watts; do not attempt to replace the LEDs.

TROUBLESHOOTING

⚠ **WARNING**: Before beginning work, shut off the power supply to avoid electrical shock.

PROBLEM	POSSIBLE CAUSE	CORRECTIVE ACTION
Fan does not move.	1. Reverse switch not engaged. 2. Power is off or fuse is blown. 3. Faulty wire connection.	1. Push switch firmly either left or right. 2. Turn power on or check fuse. 3. Turn power off. Loosen canopy and check all connections.
Noisy operation.	1. Blades are loose. 2. Cracked blade. 3. Full range dimmer switch. 4. Fan is new.	1. Tighten all blade screws. 2. Replace blade. 3. Replace with an approved speed control device. 4. Allow fan a “break in” period of a few days, especially when running the fan at Medium and High speeds.
Excessive wobbling.	1. Blades are loose. 2. Unbalanced blades. 3. Fan not securely mounted. 4. Fan too close to vaulted ceiling. 5. Set screw(s) on motor housing yoke is (are) not tightened properly. 6. Set screw on hanging ball is not tightened properly.	1. Tighten all blade screws. 2. Switch one blade with a blade from the opposite side. 3. Turn power off. Carefully loosen canopy and verify that mounting bracket is secure. 4. Use a longer downrod or move fan to another location. 5. Tighten yoke set screw(s) securely. 6. Carefully loosen and lower canopy and verify that set screw on hanging ball is tightened securely.
Fan operates but light fails.	1. Wires in canopy not wired properly. 2. Wall switch to light is off. 3. Wires from LED light kit not wired correctly.	1.Check wires in canopy and, if necessary, re-wire according to instructions on pages 11 - 12. 2. Make sure that wall switch to light is on. 3. Check that all connections in LED light kit are connected properly according to instructions on page 14.

NOTE: A small amount of "wobble" is normal and should not be considered a defect.

LIMITED LIFETIME WARRANTY

Set forth below, the manufacturer warrants the fan motor for this ceiling fan to be free from defects in workmanship and material for the life of the product. Also, subject to the limitations below, the manufacturer warrants all ceiling fan parts (“ceiling fan parts” excludes the motor and parts made in whole or in part with glass) to be free from defects in workmanship and material for a period of one year after the date of purchase by the original purchaser at retail.

All claims must be made by the original purchaser, whether such purchaser purchased the product through a store or contractor. Ceiling fan part defects must be reported within the first year from the date of purchase. Parts made in whole or in part with glass and the finishes of metal and other surfaces are not warranted.

Purchasers are responsible for all costs of removing and reinstalling the product. Any damage to any part caused by ordinary wear and tear, accident, misuse, or improper installation, is not covered by this warranty. The manufacturer assumes no responsibility whatsoever for fan installation. Any service performed by a non-licensed electrician will render the warranty invalid.

The manufacturer’s sole responsibility shall be to repair or replace the motor, parts, or product within the terms stated above. The manufacturer shall not be liable for any loss or damage of any kind, including any incidental or consequential damages resulting directly or indirectly, from any breach of warranty, express or implied, or any other failure of this product. Some states do not allow the exclusion or limitation of incidental or consequential damages so this limitation may not apply to you.

If the original purchaser ceases to own the fan, this warranty is voided.

Should the purchaser encounter a problem with your fan related to defects in workmanship or materials within the warranty period associated with the defective part, the manufacturer agrees to replace the defective part without charge, or at its option, to replace the ceiling fan with a comparable or superior model.

The manufacturer’s warranties are limited to the written warranties set out in this ceiling fan limited lifetime warranty. All other express and implied warranties, including, without limitation, the implied warranty of fitness for a particular purpose and the implied warranty of merchantability are disclaimed. Some states do not allow the disclaimer of implied warranties, so this disclaimer may not apply to you.

REPLACEMENT PARTS LIST

All parts are replaceable (see parts list in “Package Contents” on Page 5), however, only the parts listed below are under warranty. For replacement parts, call our customer service department at **888-251-1003**, 8 a.m. - 8 p.m., EST, Monday - Sunday.

PART	DESCRIPTION	#5971308 PART #	#6245874 PART #	#6245876 PART #
A	Downrod	5971308-A	6245874-A	6245876-A
B	Canopy	5971308-B	6245874-B	6245876-B
C	Mounting Bracket	5971308-C	6245874-C	6245876-C
H	Blade	5971308-H	6245874-H	6245876-H

