3" X 4" PIPE FIT BASE WITH 3-1/2" METAL SPUDS 5" OR 6" SQUARE STAINER FITS OVER 3" OR INSIDE 4" SCHEDULE 40 DWV PIPE

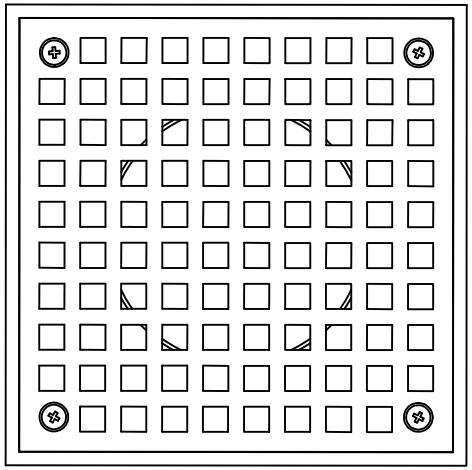

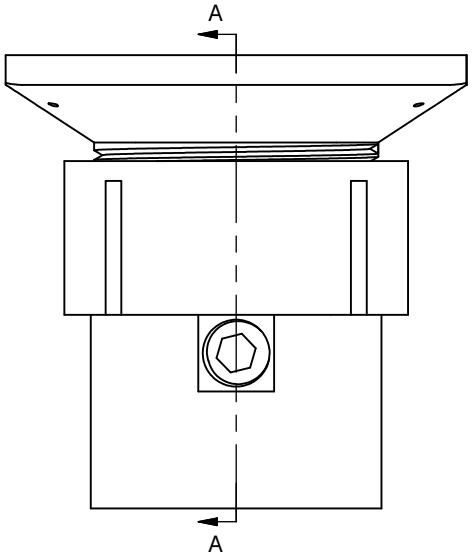

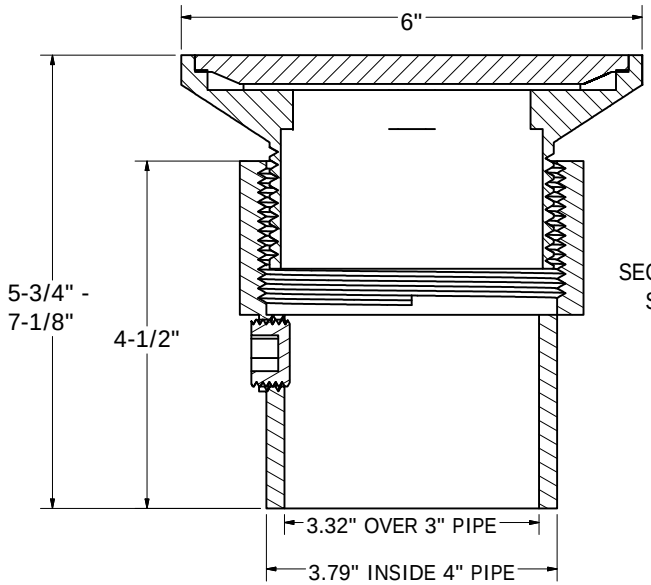

SECTION A-A
SCALE .8

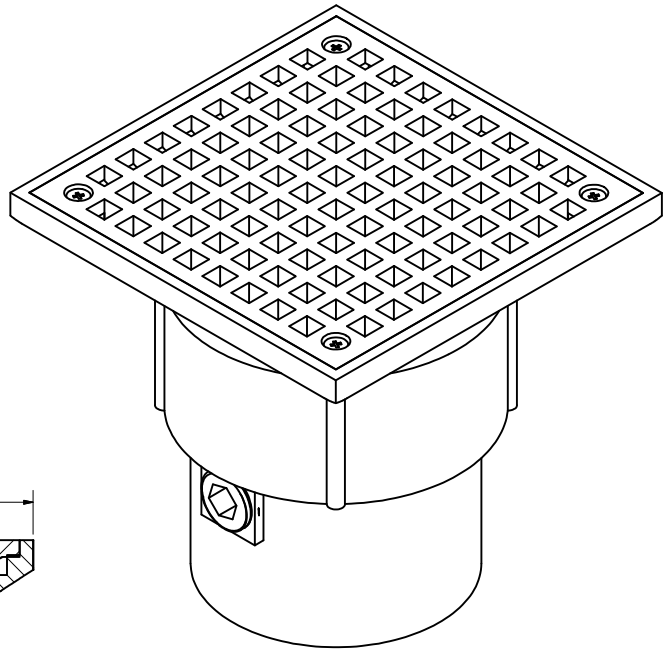

Jones Stephens Corp.	PHONE NUMBER 1-800-355-6637	PART NO.	D53080	D53081	D53084	D53085			
	FAX NUMBER 1-800-462-6991	STRAINER	6" PB	6" PB	6" NB	6" NB			
	SCALE .8 : 1								
	DATE 11-02-10	MATERIAL	PVC	ABS	PVC	ABS			
	SHEET 1 OF 1								
	DRAWN BY ASHLEY KRALOVEC								