ASSEMBLY INSTRUCTIONS

WICKER ROCKING CHAIR

IT-130979

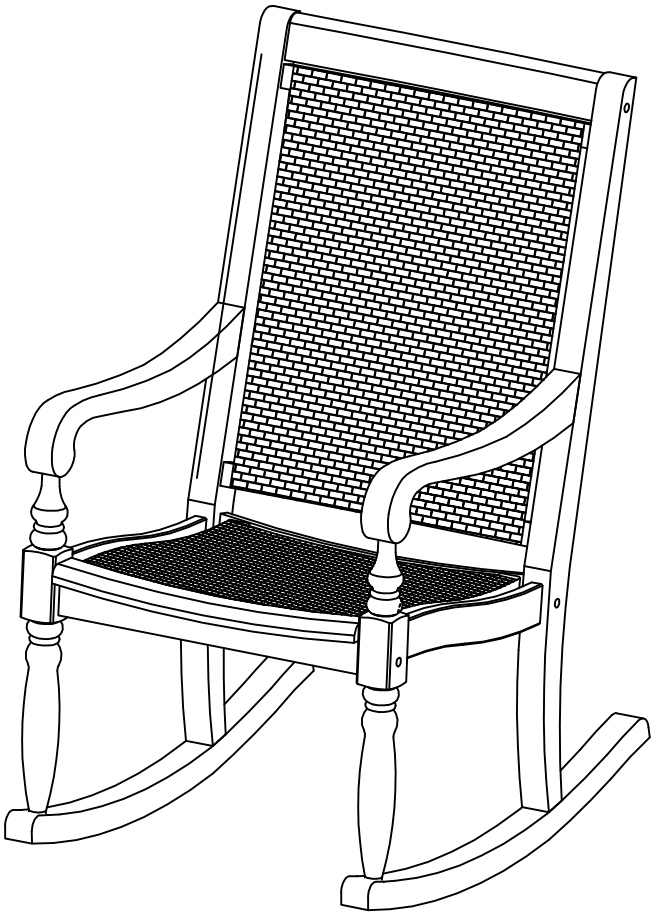

CUSTOMER SERVICE INFORMATION

Please email us at info@cambridge-casual.com for assembly tips, report damage, or request parts.
For faster response, please write down item number, code for missing parts,
attach the purchase receipt and picture of damaged parts.

GENERAL INFORMATION & TIPS

1. Please read the assembly instructions prior to assembling the Rocker.
2. To avoid damage, assemble the rocker on a non-abrasive surface such as carpet.
3. Make sure all bolts tightly fastened before the rocker is used.
4. This rocker is not for commercial use.

Please make sure you have all parts before beginning assembly. Please wait until all steps are completed before tightening bolts.

TOOLS REQUIRED

1. 8" Philips screwdriver (Not provided).
   - For tightening all bolts and screws.

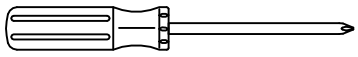

2. Rubber Mallet (Not provided).
   - For tapping in the wooden caps.

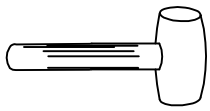

PARTS AND HARDWARE LIST

A1. Right side frame	A2. Left side frame	B. Head back support	C. Back support
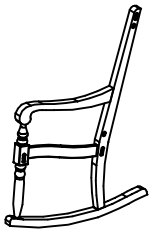	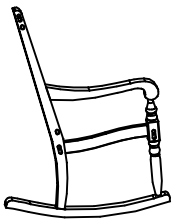	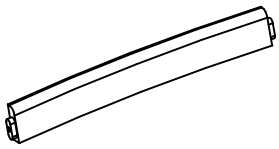	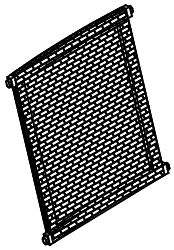
Qty : 1 Pc	Qty : 1 Pc	Qty : 1 Pc	Qty : 1 Pc
D. Seat	E. 1 3/4" Bolt	F. 2" Bolt	G. Wooden cap
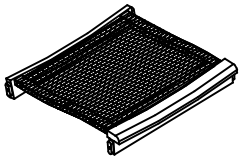			
Qty : 1 Pc	Qty : 4 Pcs +1	Qty : 2 Pcs +1	Qty : 6 Pcs +1

STEP 1

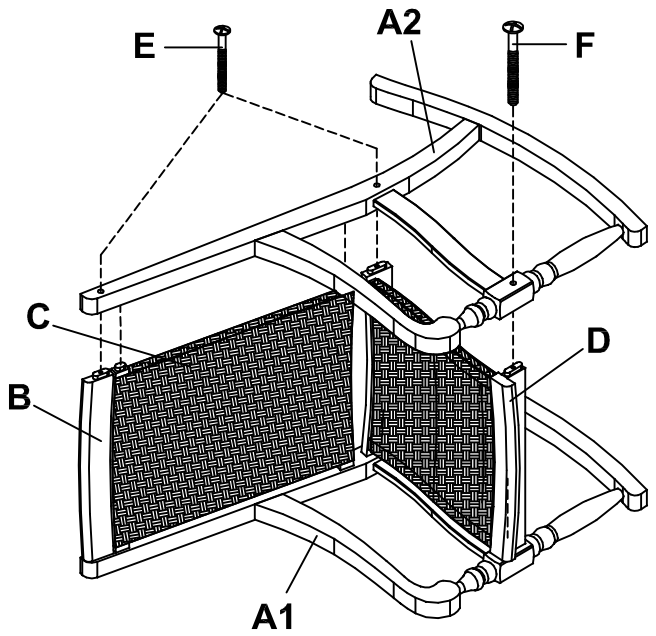

Install Head Back Support (B), Back support (C) and Seat (D) into matching holes of Right Side Frame (A1). Attach the Left Side Frame (A2) onto Apron (B), Back support (C) and Seat (D). Secure Left Side Frame (A2) using 1 3/4" Bolts (E) and 2" Bolt (F), as shown.

STEP 2

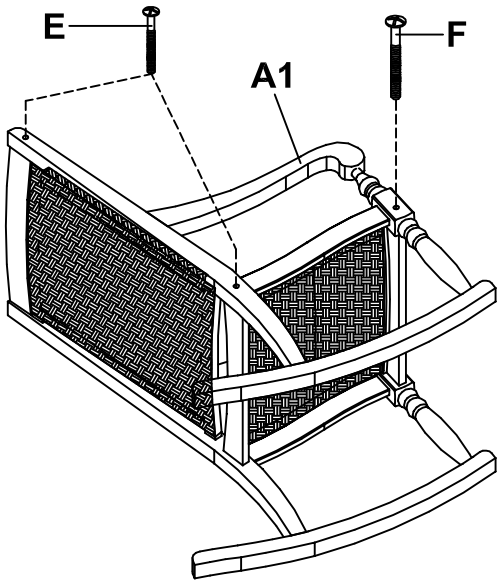

Invert the rocker and repeat the step 1 procedure to secure the Right Side Frame (A1).

STEP 3

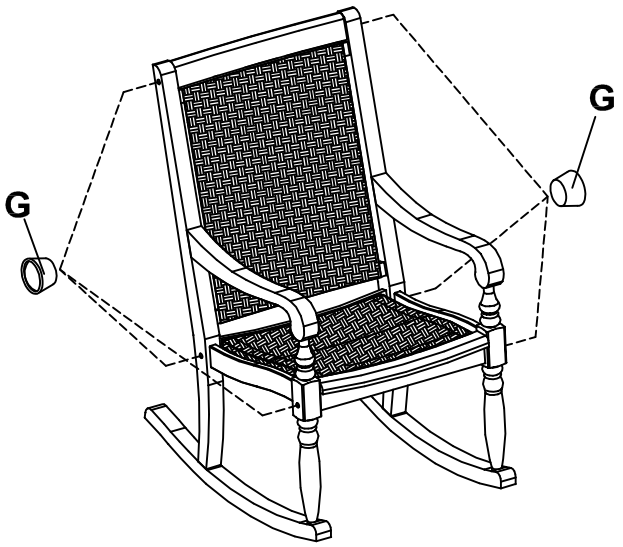

- Upright the rocker.
- Make sure all parts are correctly connected and tighten all bolts using screwdriver .
- Tapping in the wooden caps (G) to cover bolts head using rubber mallet.

CONGRATULATION !

THE ROCKER CHAIR IS NOW READY FOR USE.

MAINTENANCE

Wood is a living material that continues to respond to climate condition even after being made into a piece of furniture.

After assembly rub the furniture with soft rag to remove any residual dust. Wood is a natural material whose appearance will change when left outdoors. This product has been treated prior to leaving the factory. To clean, use mild soap and warm water. Do not use abrasive material, cleansers or bleach products, Dry thoroughly with soft cloth,

Even though this piece of furniture is extremely durable and long lasting, to prolong life we recommend bringing it indoors during freezing temperatures. Place it at a shaded area and do not leave it in standing water or on wet ground.

Do not put hot items directly on furniture surface.

Do not store furniture in areas that have central heating or cooling vents to prevent excessive drying of the wood. This will decrease the furniture's longevity.

Do not write on furniture without a padded barrier to protect the surface.

In order to maintain the product's durability, please read carefully.

Do not leave your furniture in puddles of water or on wet ground.

Cover your furniture during winter months or move into covered storage, if in wet climates.

The manufacturer supports protection of the world's forest resources and is diligent is sourcing legally harvested wood.
Thank you
The manufacturer

1 year Limited Warranty

The furniture is warranted to be free from defects in material and workmanship of the original product when purchased from one of our authorized dealers. If a product fails and is under the terms of our limited warranty, the item will be replaced, usually for a small fee. In the case of discontinued models, an item of similar quality and style will be offered to the customer.

- 1 year limited frame warranty
  Frames are warranted to be free from defects in material and workmanship. Fading or discoloring caused by putting the product under sunlight or rain is not covered by this limited warranty. Damage to the frame due to improper assembly or exposure to water and sub-freezing temperatures is not covered. (Do NOT allow water to accumulate inside frame)

- Finish
  The finish is warranted against peeling, cracking, or blistering for a period of 1 year, provided the unit has not been scratched or abraded. Scratches and chips resulting from normal wear and use are not covered. Peeling resulting from exposure to elements is not covered.

Warranty Exclusions : Furniture used for commercial, contractor or any non-residential purposes, clearance items, display models or items purchased “as is”, freight damage, furniture damaged by acts of nature, vandalism, fire, abuse, lack of proper care and maintenance, or improper assembly, straps and fabric against fading or discoloration from exposure to elements, oil spills, fluids or chemicals; glass against breakage; hardware against corrosion or rusting; buckling or splitting of tubing resulting from exposure to water and freezing temperatures. Also excluded: loss of use or time, inconvenience, money, travel, packaging or any other consequential or incidental damages. In no event shall the manufacturer's responsibility exceed the value of the replacement product.

Warranty is to the original purchaser when items are purchased from one of our authorized retailers and is not transferable. Should replacement of the warranty item be unavailable, the manufacturer reserves the right to substitute items of our choice that are of similar style and quality. For quality control purposes and verification, we need documents in support of your claim :

- Packing slip / Invoice
- Additional documents (Photos or video) of damaged/ defected/ missing part
- Item number and part code (can be found on assembly instruction)

Note :
To expedite the handling of your claim, please include the above mentioned documents as your claim **WILL NOT BE PROCESSED** until properly supported. **Retain all damaged goods until the claim is concluded.**

The terms of this warranty are subject to change without notice.