Vinnova Inc.

INSTALLATION SPECIFICATION

Model No.	113123-BAF-MB
Description	Vessel Sink Faucet
Overall Dimensions	8 7/16" D x 13 3/4" W x 5 3/4" H
Flow Rate	1.2GPM
Faucet Height	5 3/4"
Spout Reach	7 5/16"
Spout Height	3 1/2"
Faucet Weight	4.4 LBS
Faucet Certifications	CUPC, NSF, AB1953, WATERSENSE

All measurements are approximate. Measurements may var y +/- 1/2''

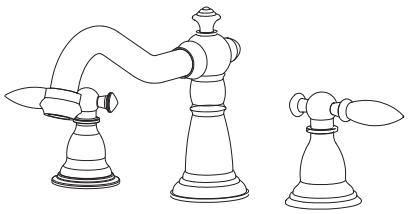

Corella
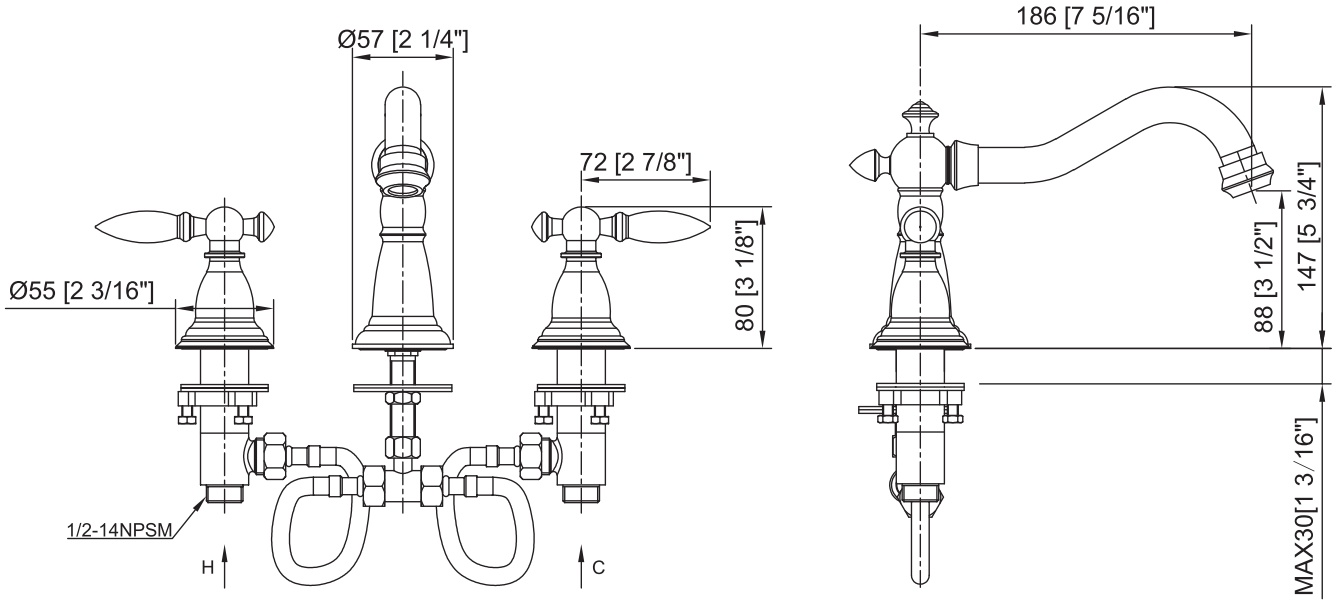
Widespread Bathroom Basin Sink Faucet