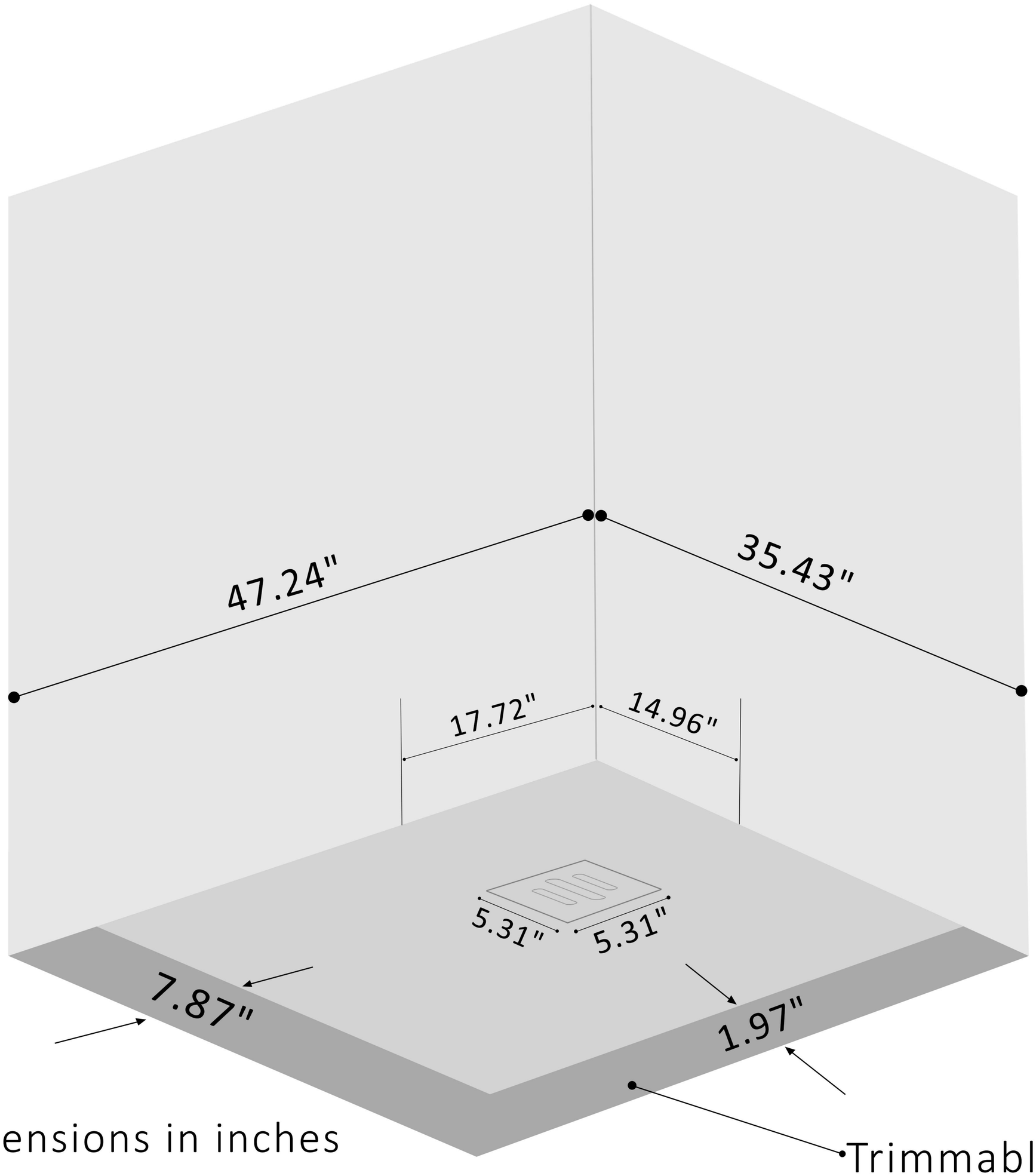
47.24"
35.43"
17.72"
14.96"
5.31"
5.31"
7.87"
1.97"
Dimensions in inches
Trimmable area

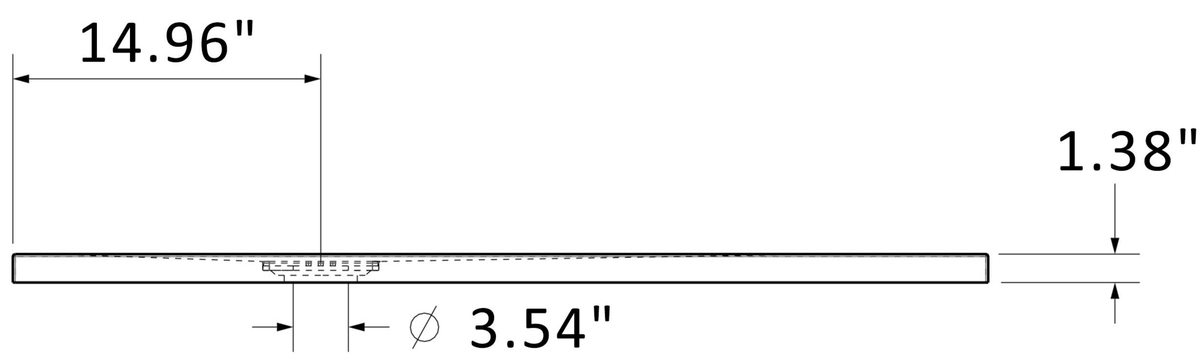
14.96"
1.38"
∅ 3.54"