ASSEMBLY INSTRUCTION

1

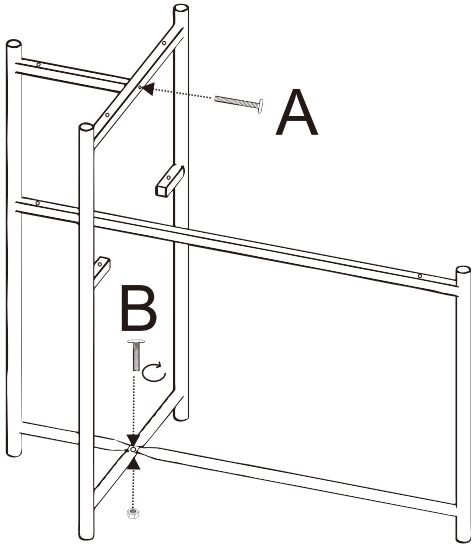

A	M6X30mm	1
B	M6X10mm	1

2

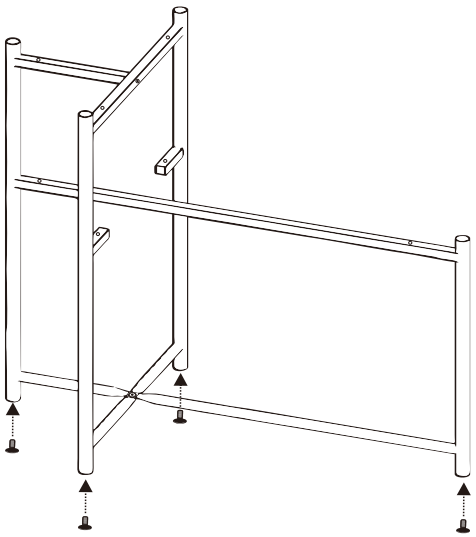

E	M6X15mm	4

3

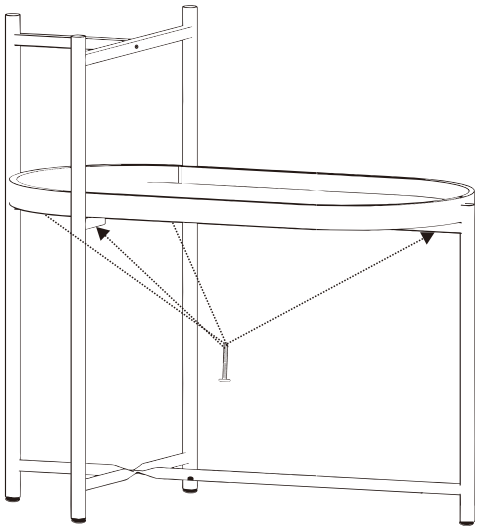

A	M6X25mm	4

4

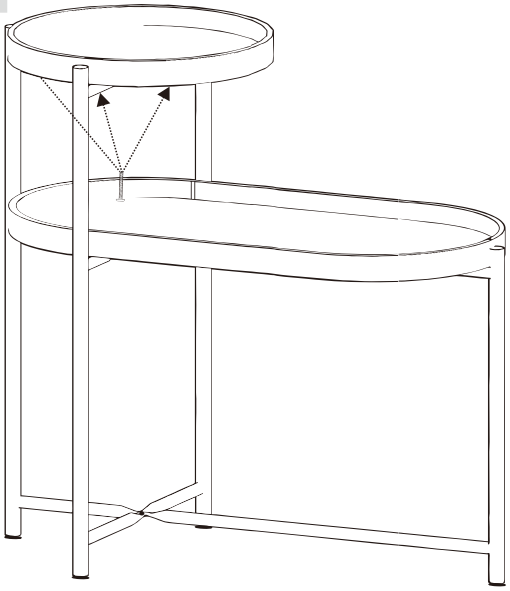

A	M6X25mm	3