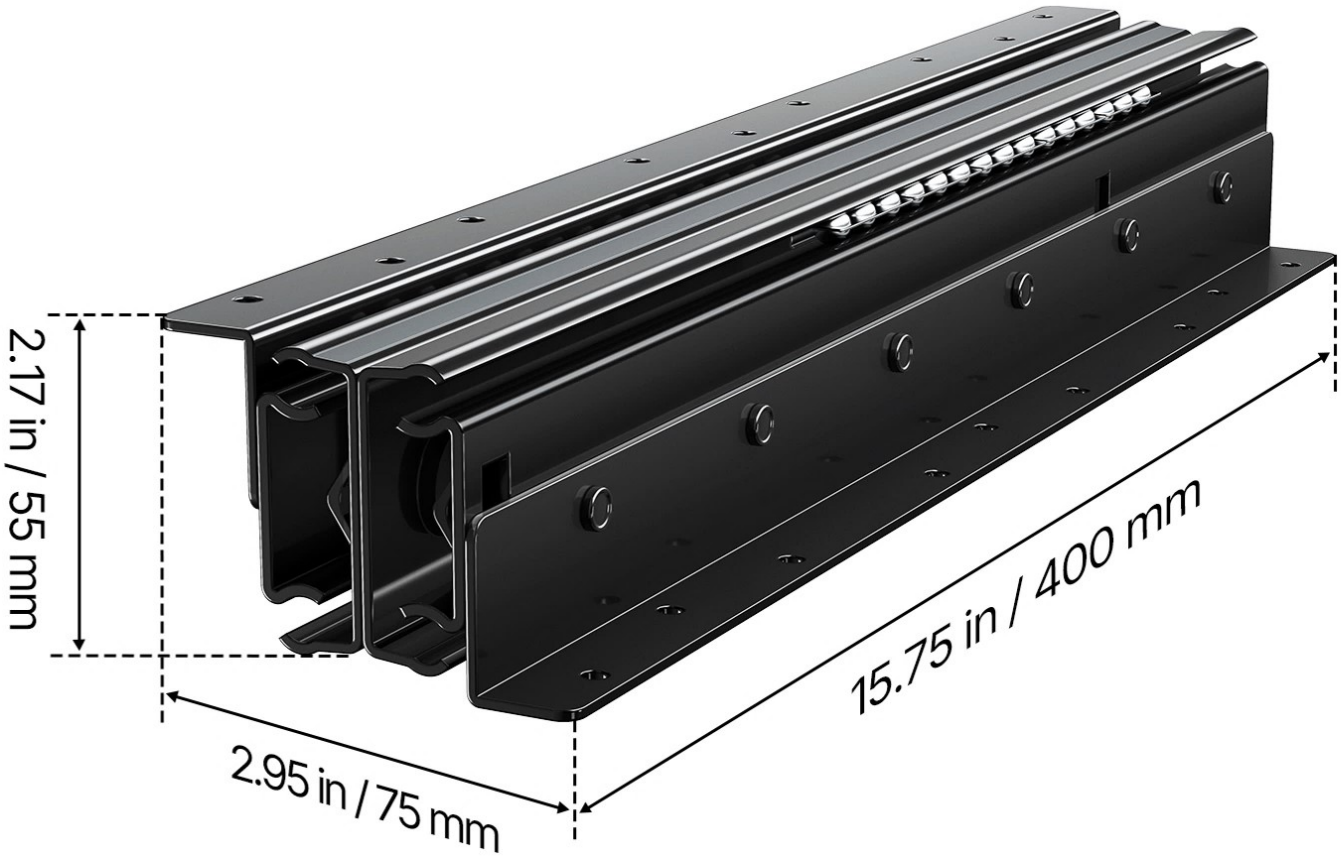
2.17 in / 55 mm
2.95 in / 75 mm
15.75 in / 400 mm