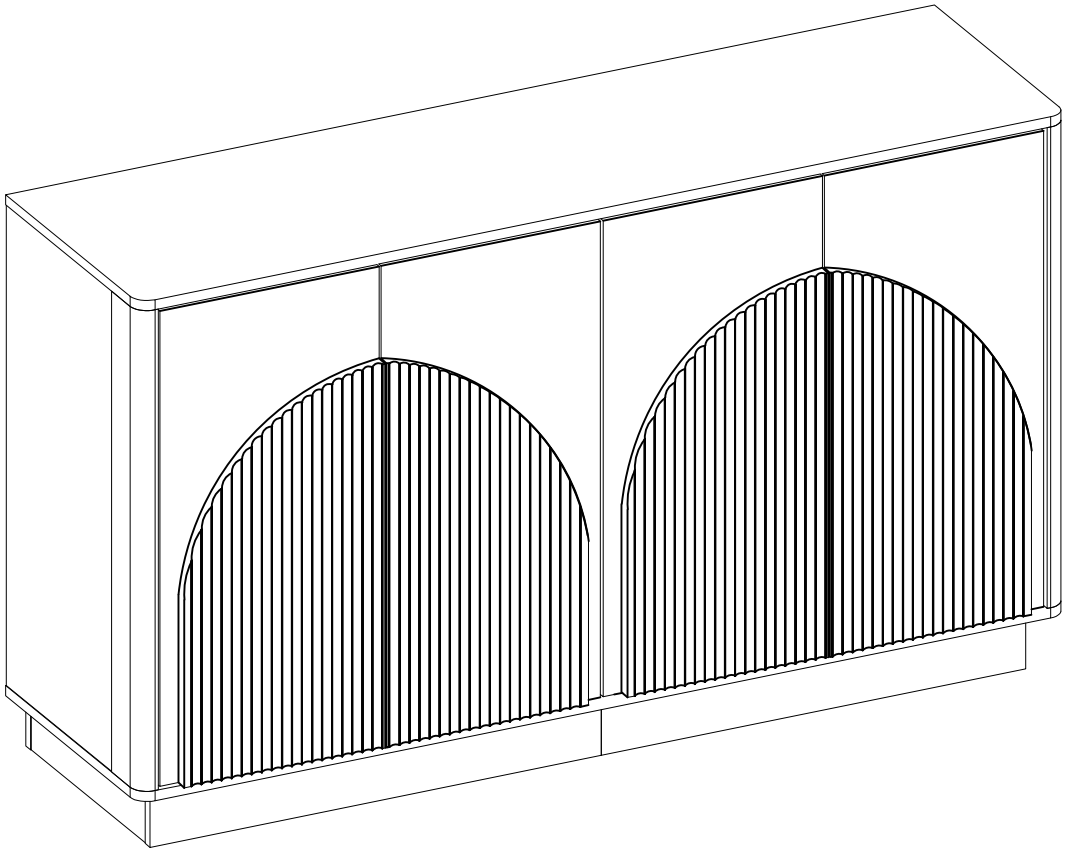

DS-SB025B/F

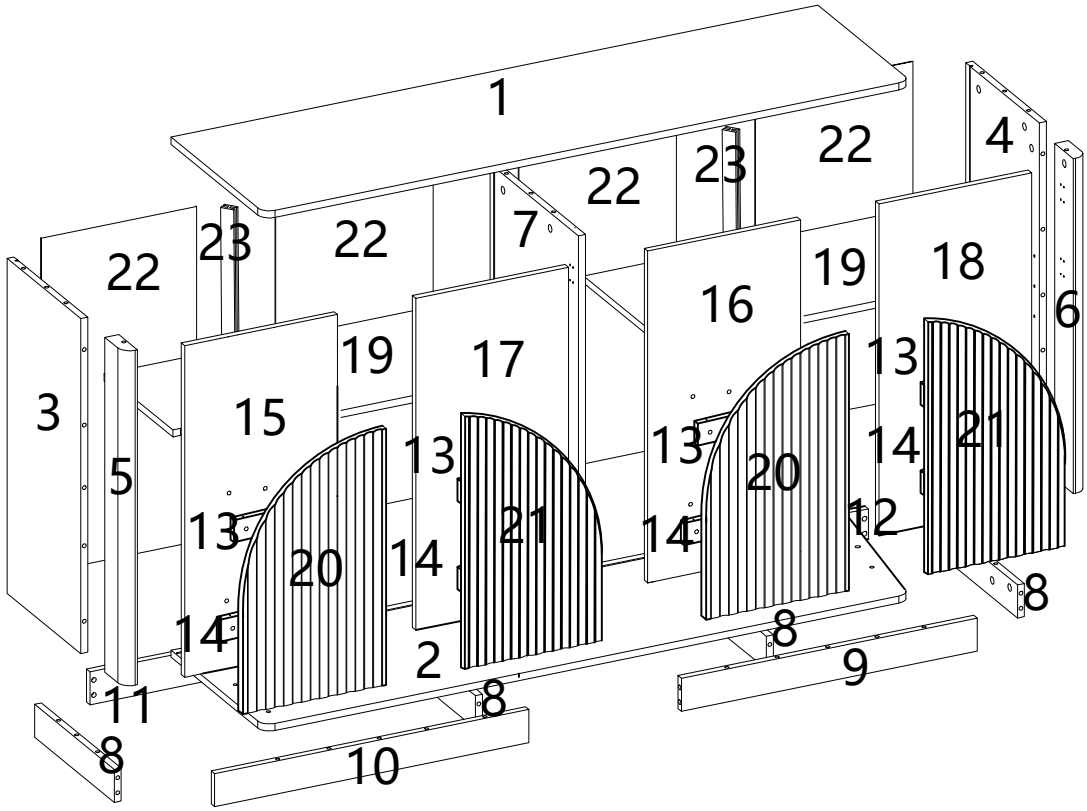

A  44PCS	B 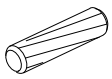 ⌀8*30mm 56PCS	C  ⌀5*40mm 8PCS	D  M3.5*12mm 150PCS	E 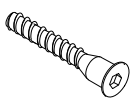 ∅5*30mm 16PCS	F Inset Hinge  6PCS	G Half Overlay Hinge  6PCS	
H 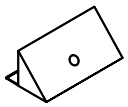 14PCS	I 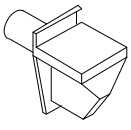 8PCS	J 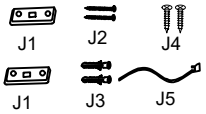 2PCS	K  14PCS	L  52PCS	M 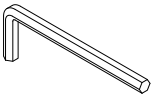 1PC	N  32PCS	

1

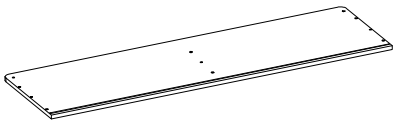

1645*400*15mm 1PC

2

the other side

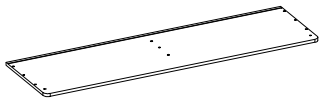

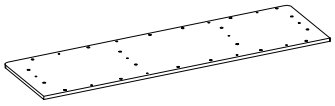

one side

1645*400*15mm 1PC

3

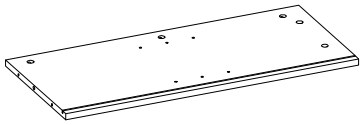

725*319*15mm 1PC

4

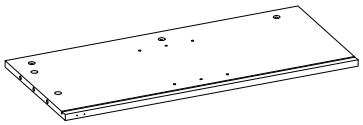

725*319*15mm 1PC

5

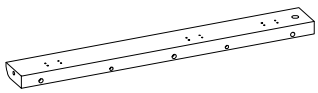

725*80*30mm 1PC

6

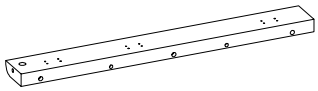

725*80*30mm 1PC

7

the other side

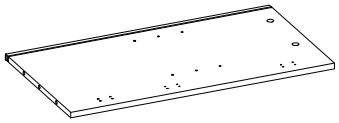

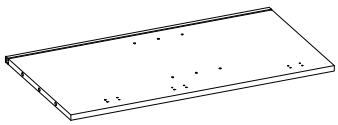

one side

725*383*15mm 1PC

8

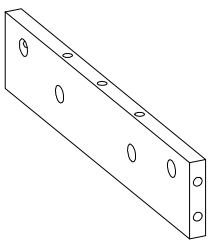

340*70*15mm 4PCS

9

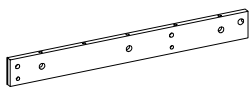

772*70*15mm 1PC

10

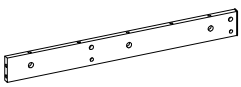

772*70*15mm 1PC

11

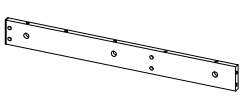

772*70*15mm 1PC

12

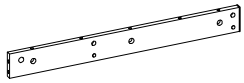

772*70*15mm 1PC

13

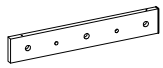

246*40*15mm 4PCS

14

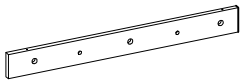

306*40*15mm 4PCS

15

the other side

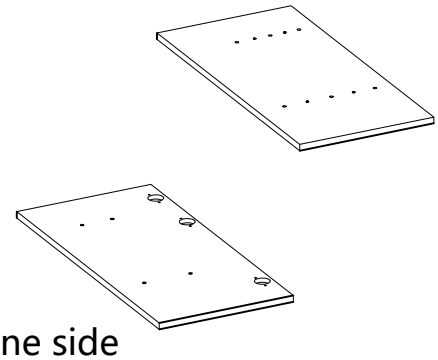

one side

717*392*12mm 1PC

16

the other side

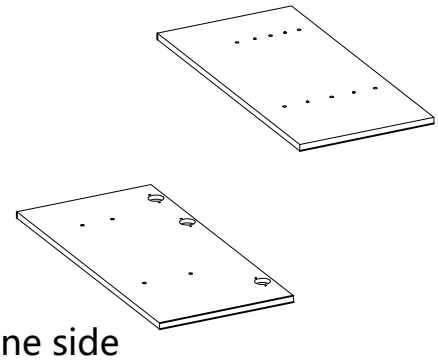

one side

717*392*12mm 1PC

17

the other side

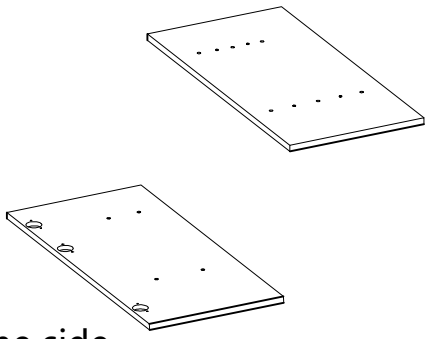

one side

717*392*12mm 1PC

18

the other side

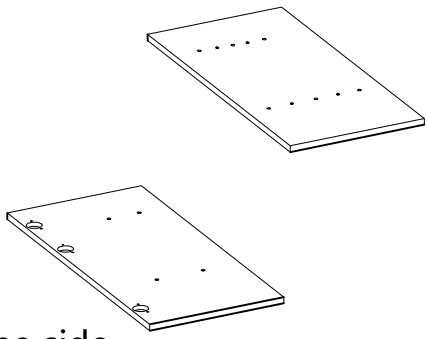

one side

717*392*12mm 1PC

19

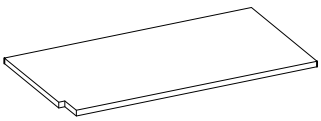

797*365*12mm 2PCS

20

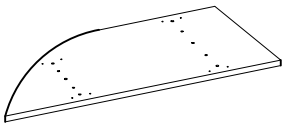

643.5*342*12mm 2PCS

21



643.5*342*12mm 2PCS

22

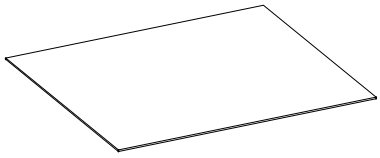

735*403*3mm 4PCS

23

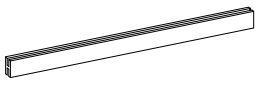

L=723mm 2PCS

STEP 1

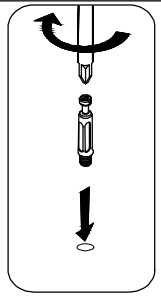

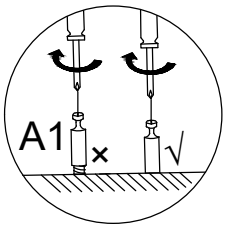

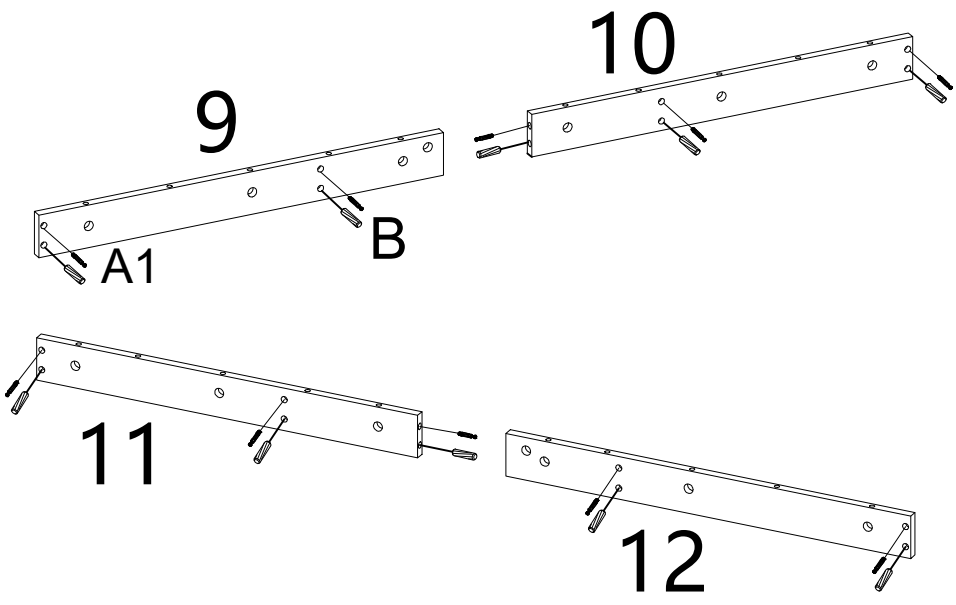

	A1×10PCS		B×10PCS

STEP 2

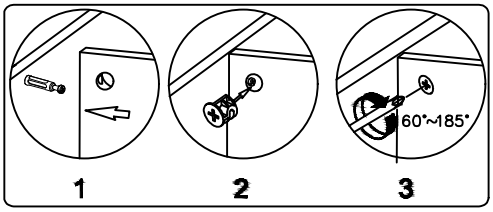

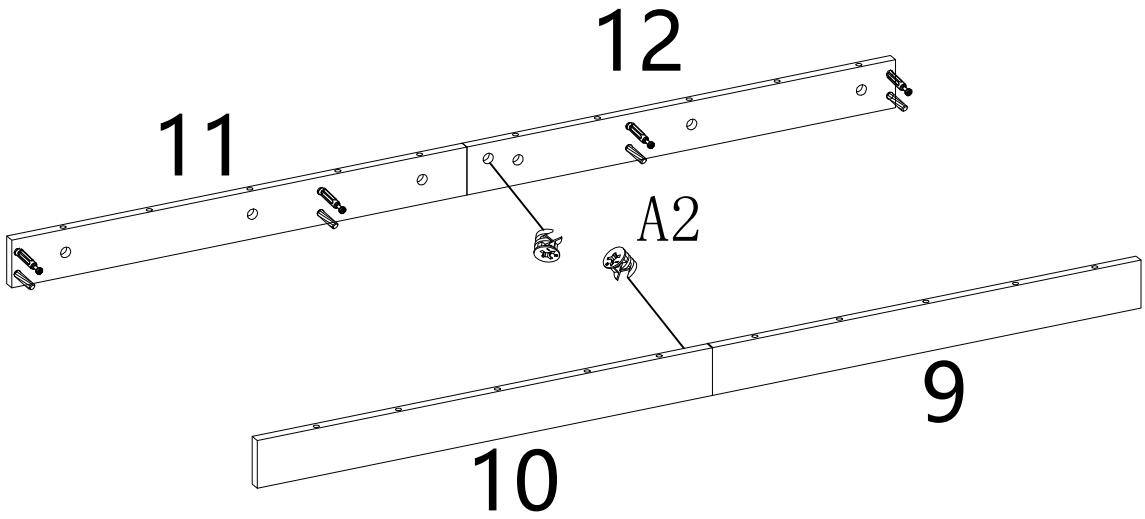

	A2×2PCS

STEP 3

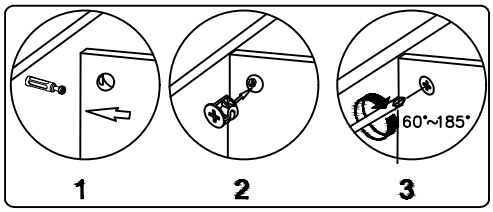

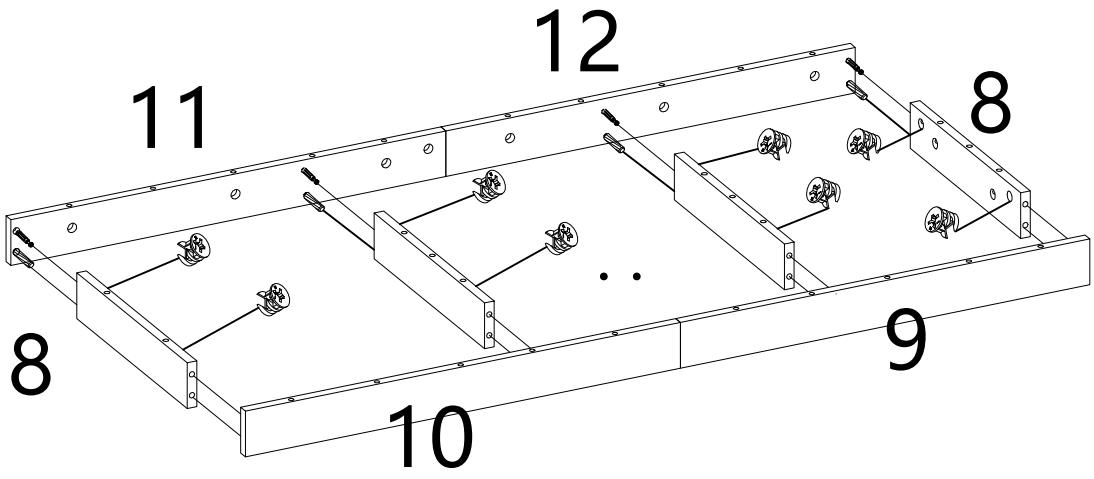



A2×8PCS

STEP 4

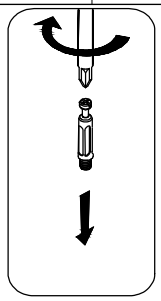

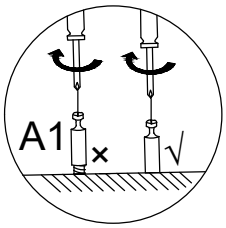

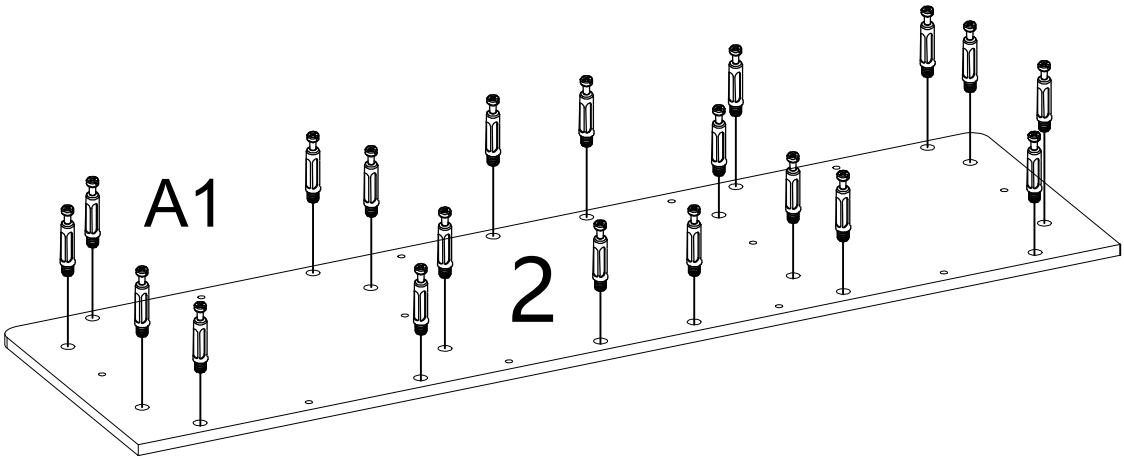



A1×20PCS

STEP 5

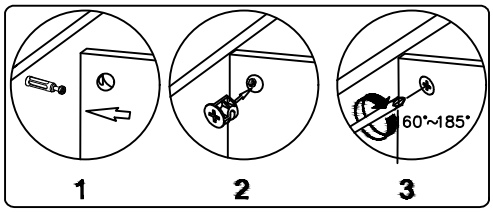

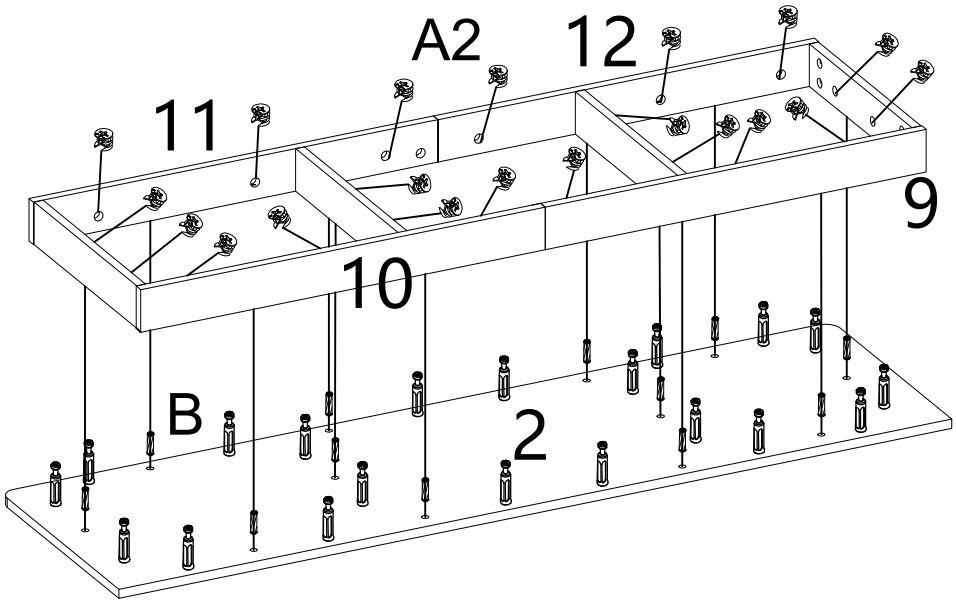

	A2×20PCS		B×12PCS

STEP 6

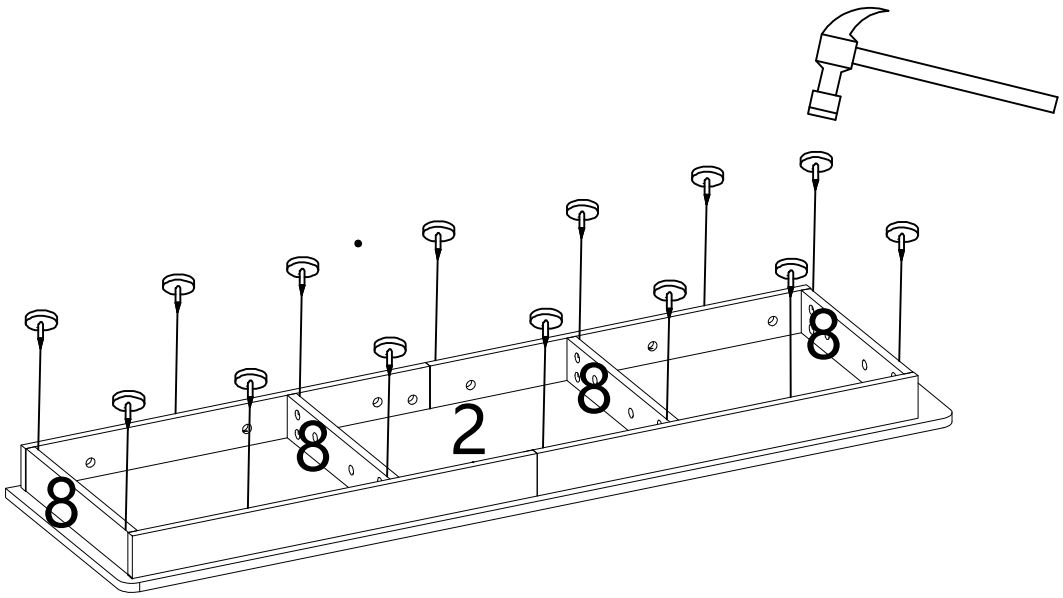

	K×14PCS

STEP 7

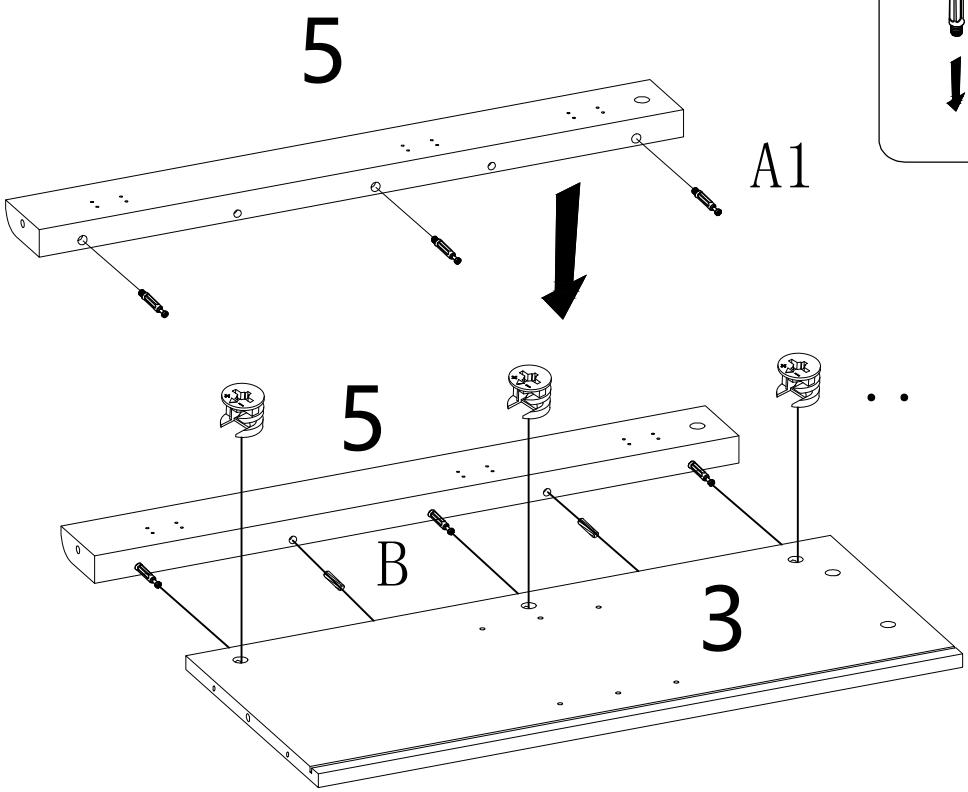

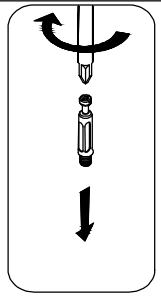

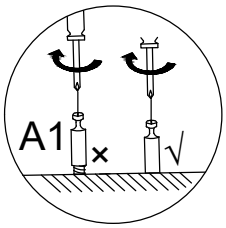

	A1×3PCS		B×2PCS		A2×3PCS

STEP 8

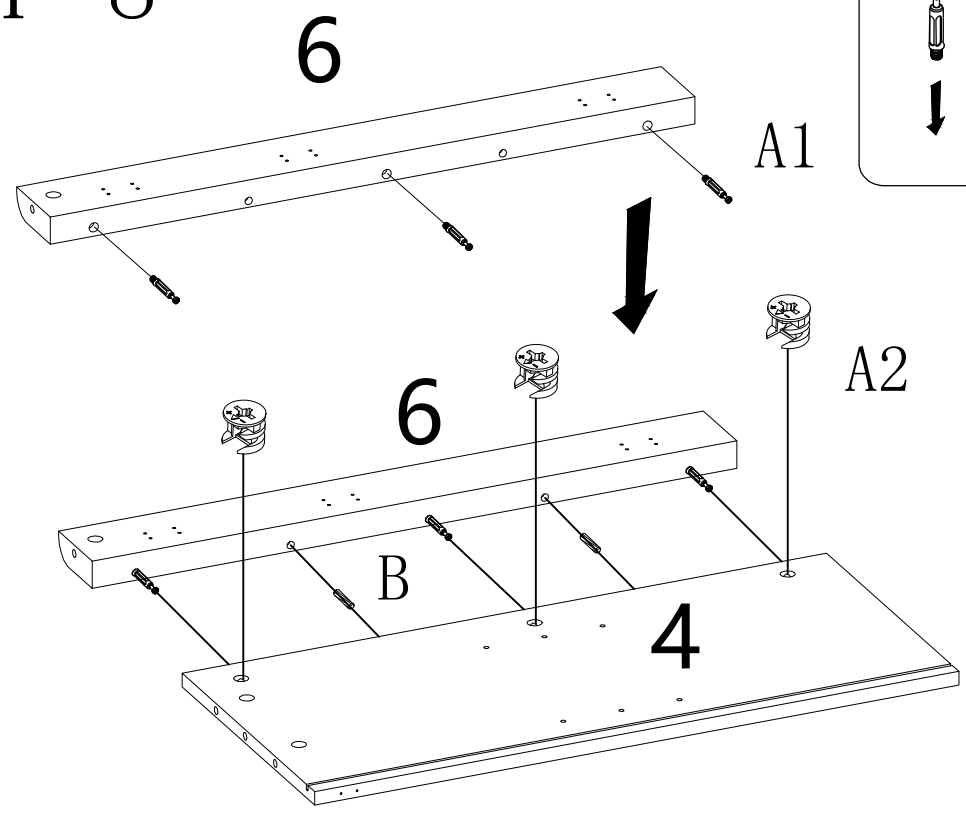

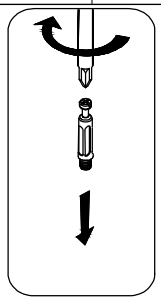

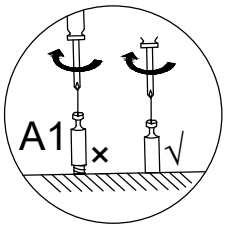

	A1×3PCS		B×2PCS		A2×3PCS

STEP 9

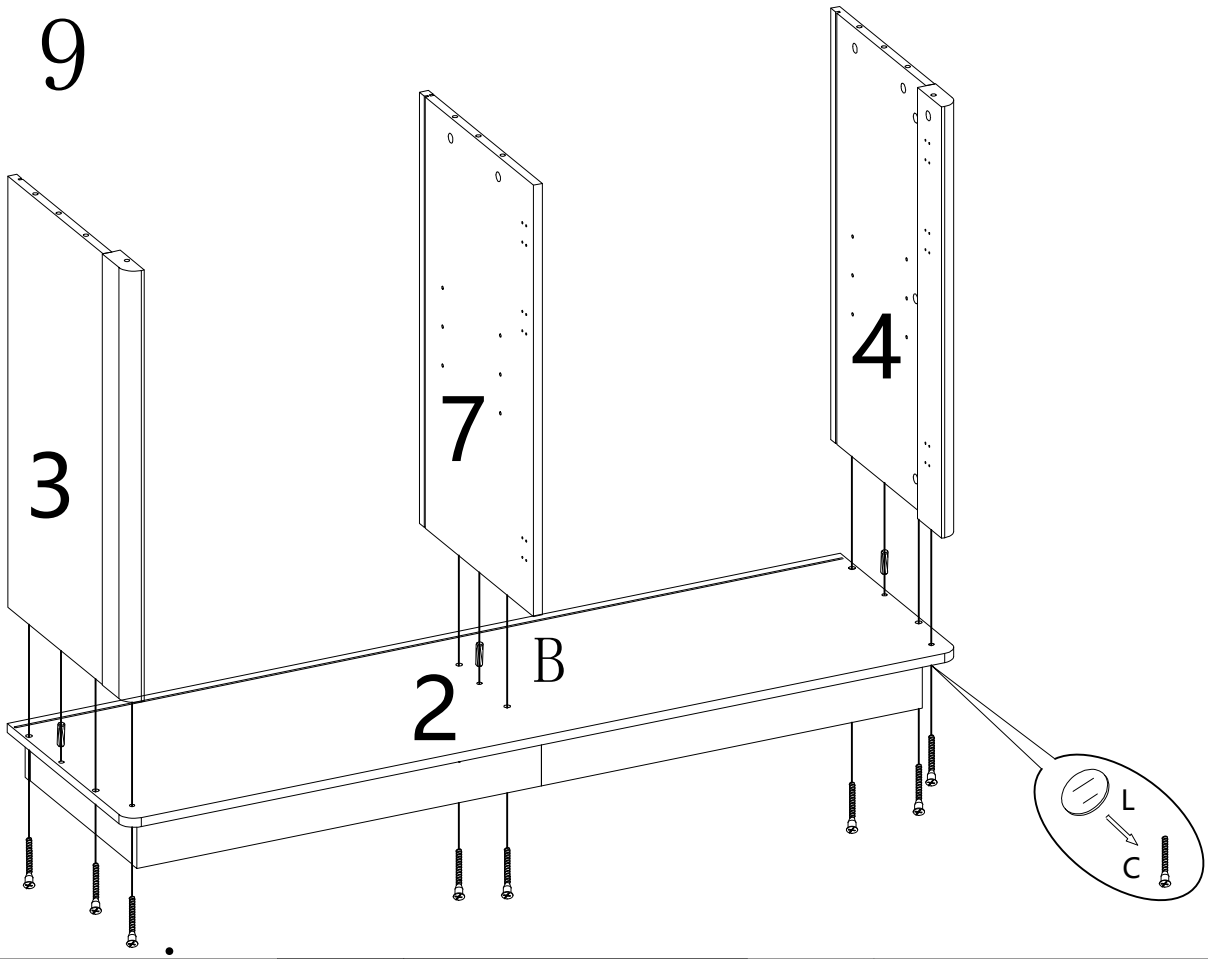

L×8PCS		B×3PCS		C×8PCS

STEP 10

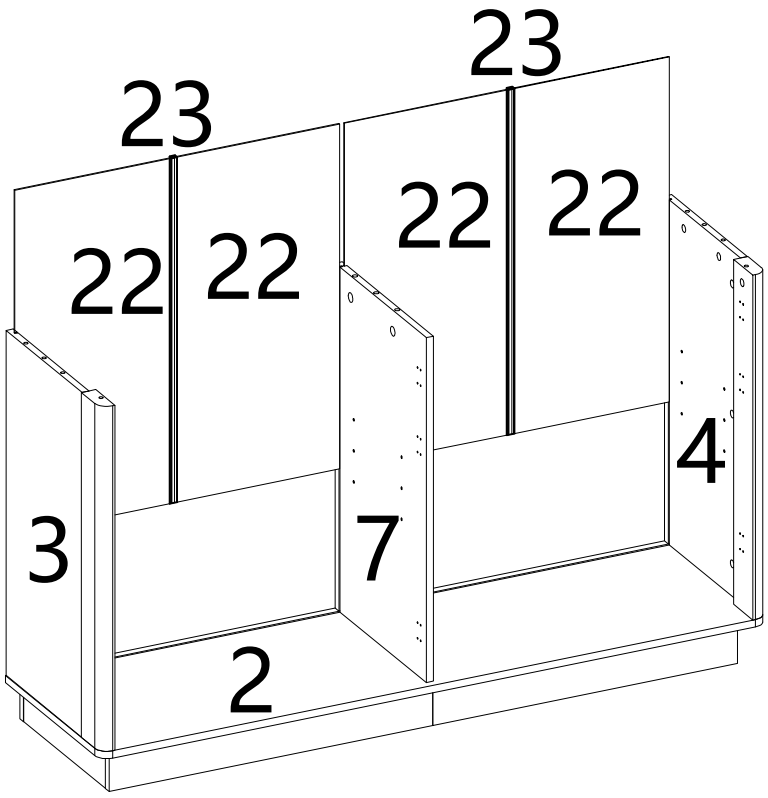

STEP 11

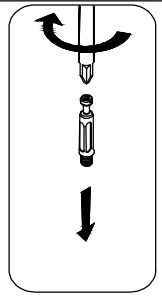

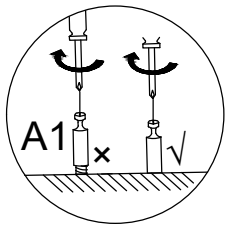

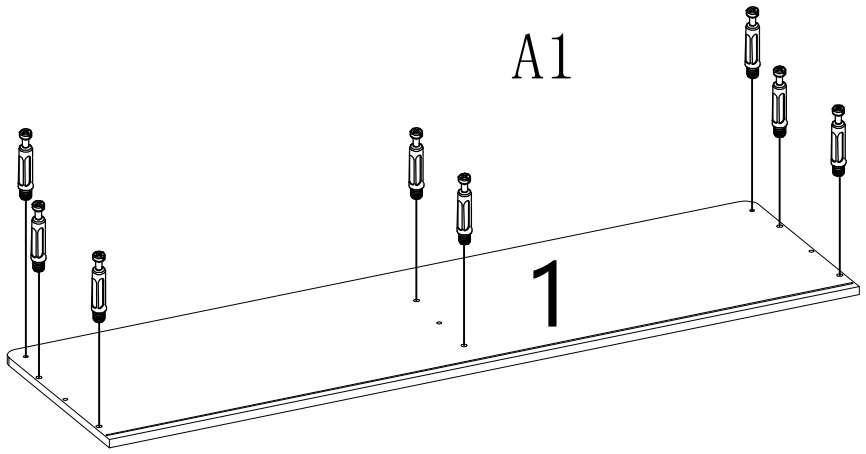

	A1×8PCS

STEP 12

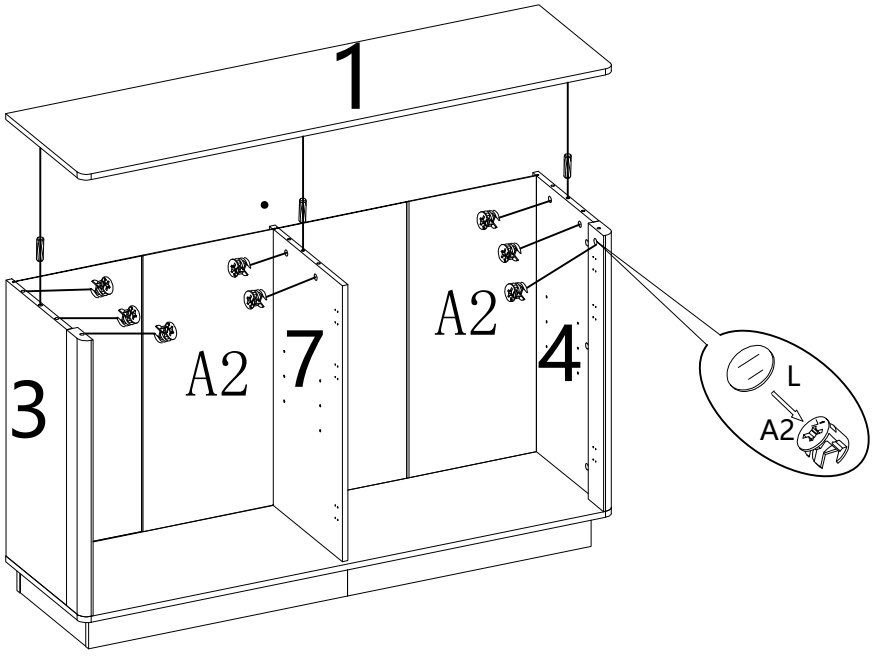

	L×44PCS		B×3PCS		A2×8PCS

STEP 13

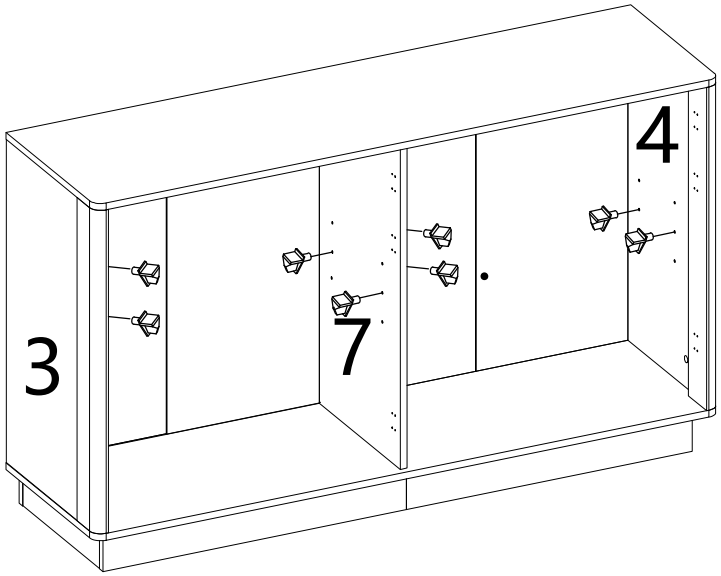



Ⅰ×8PCS

STEP 14

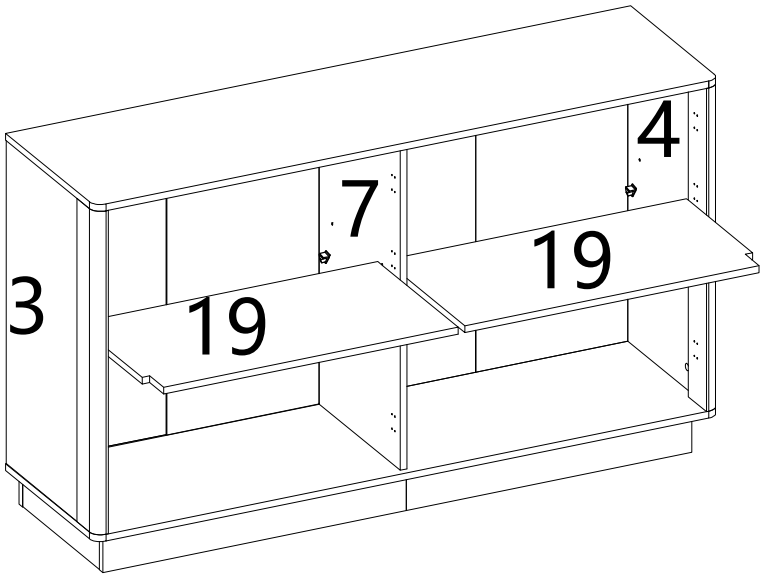

STEP 15

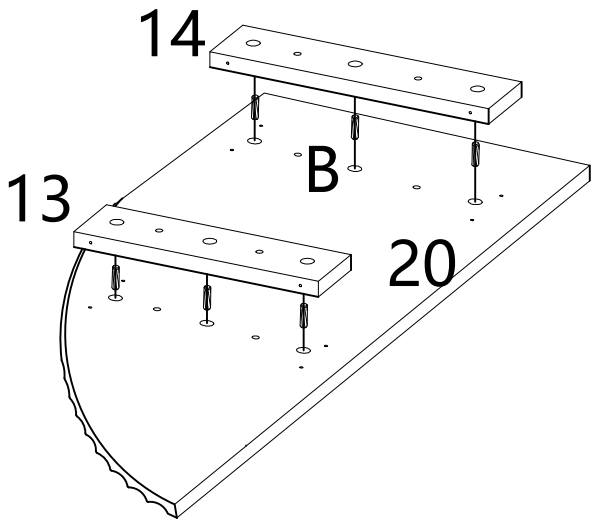

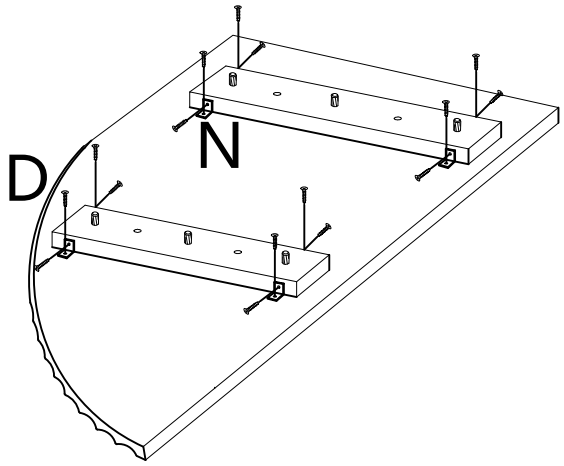

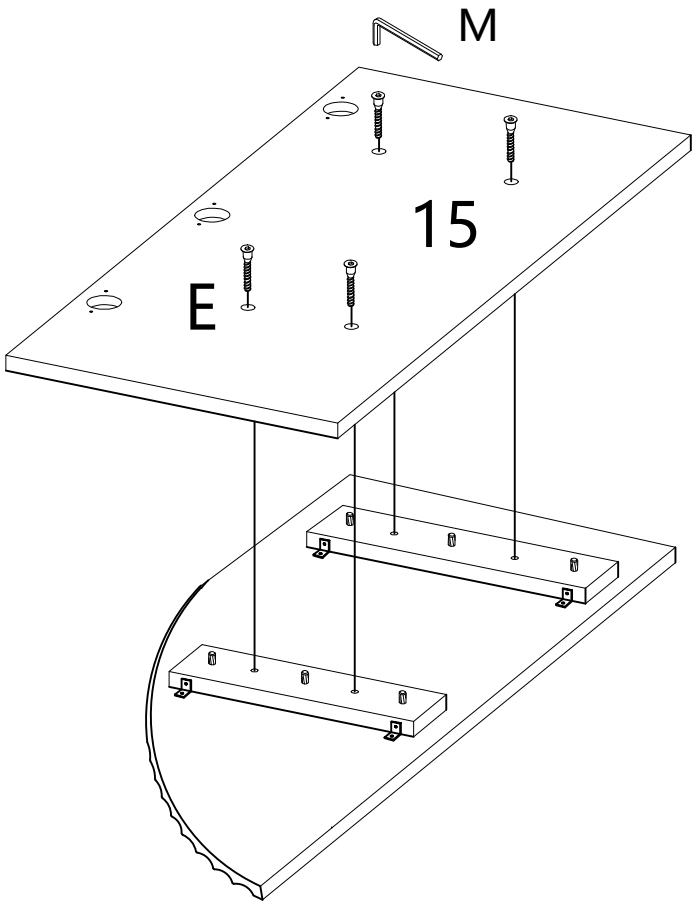

M×1PC		N×8PCS	
D×16PCS	B×6PCS		E×4PCS

STEP 16

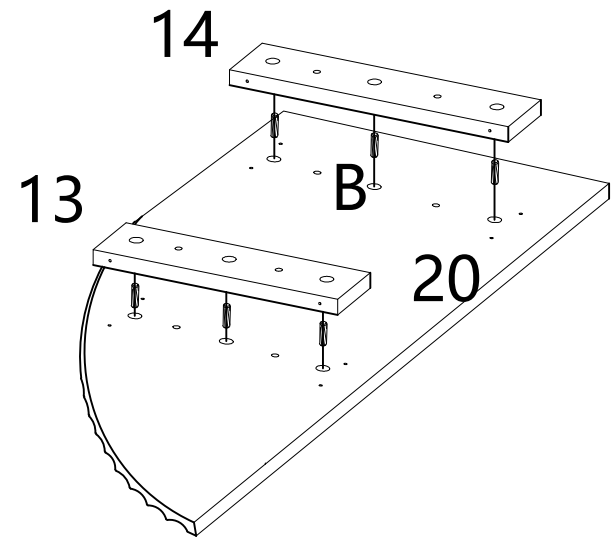

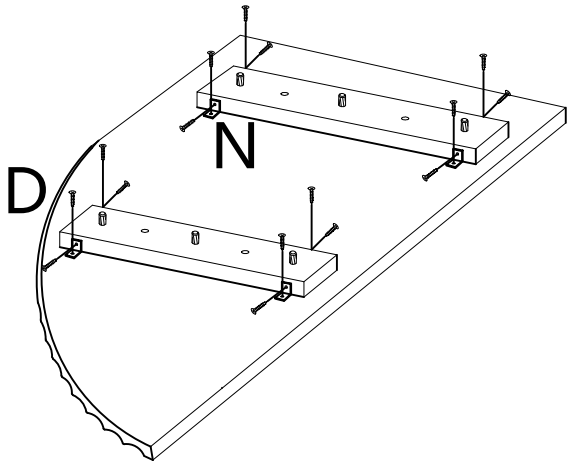

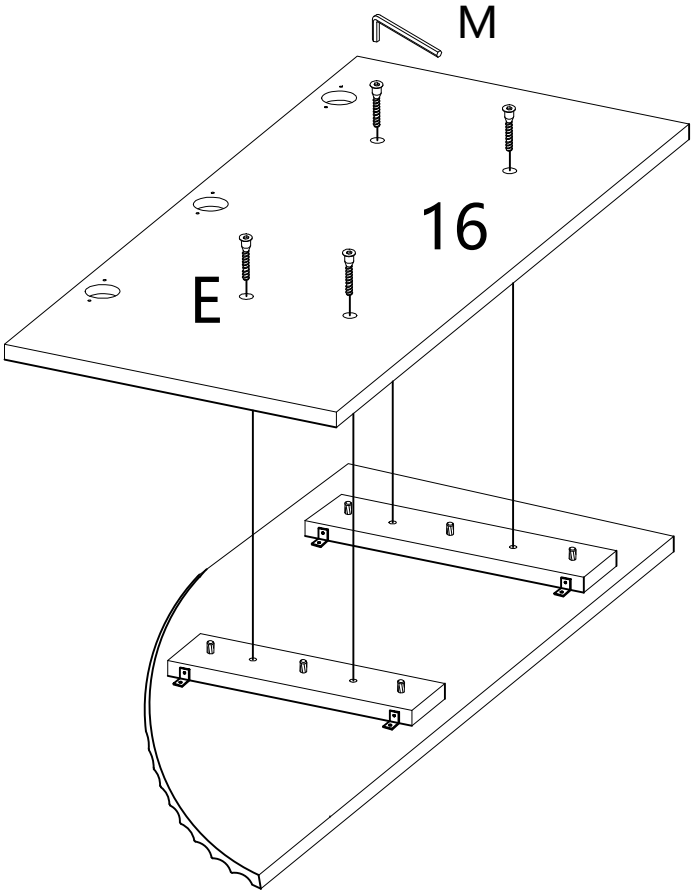

M×1PC		N×8PCS	
D×16PCS		B×6PCS	E×4PCS

STEP 17

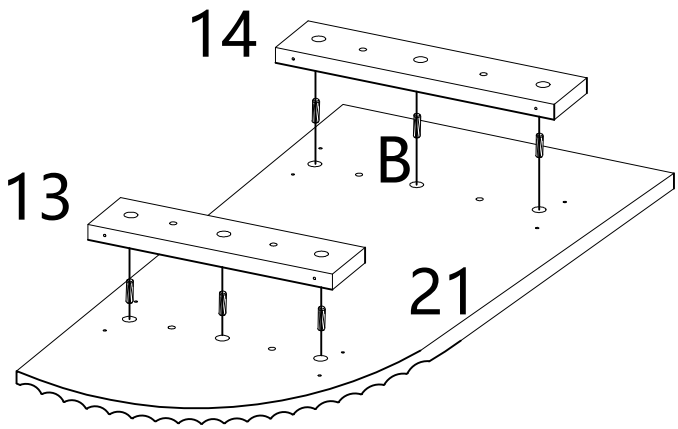

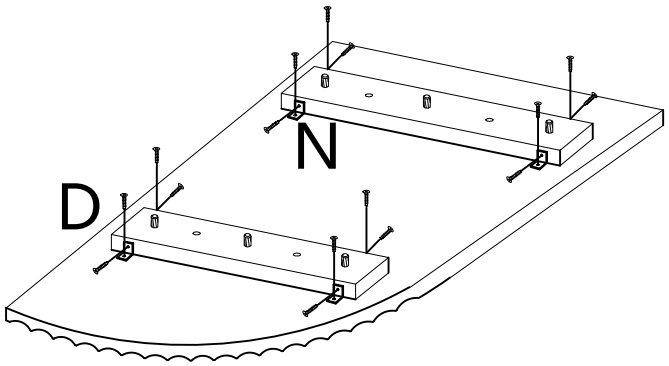

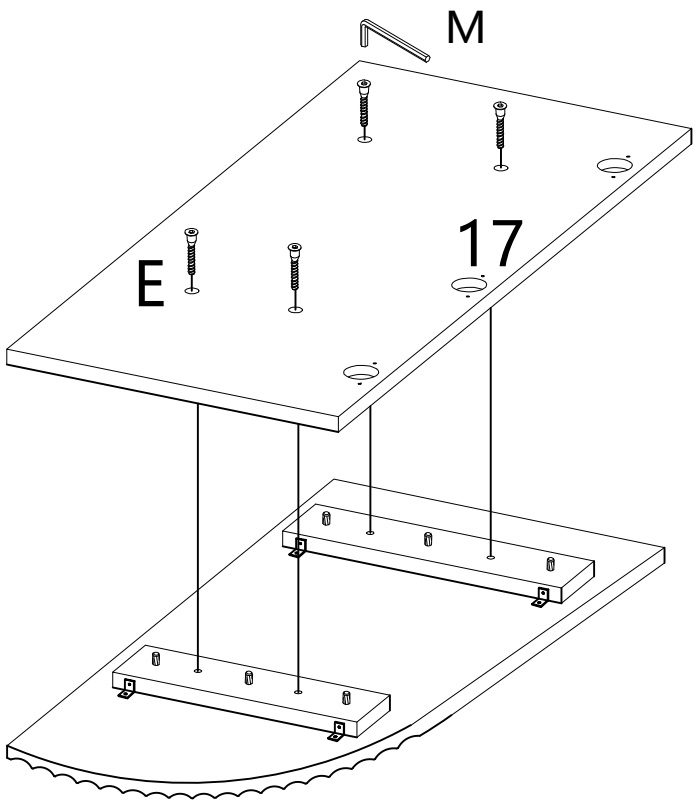

	M×1PC		N×8PCS
D×16PCS		B×6PCS	E×4PCS

STEP 18

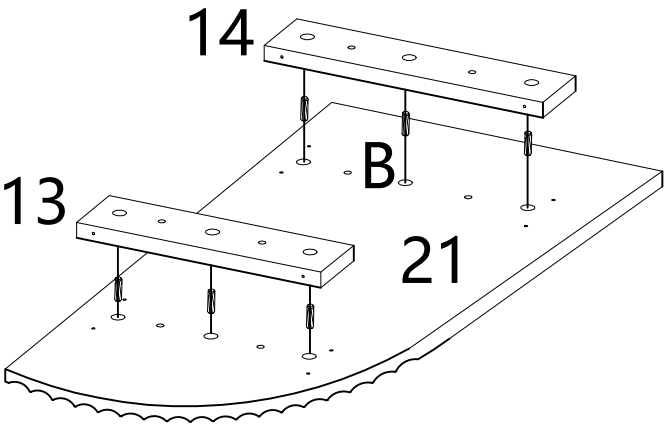

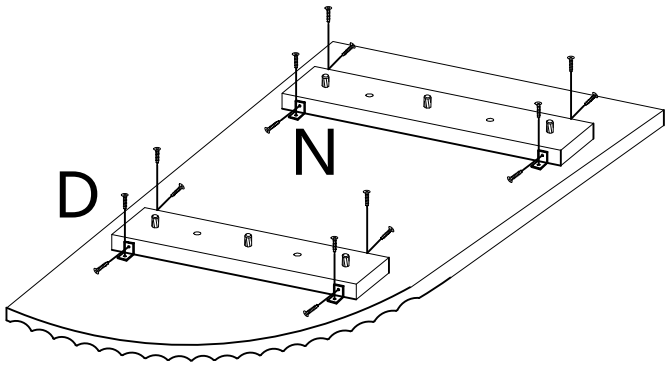

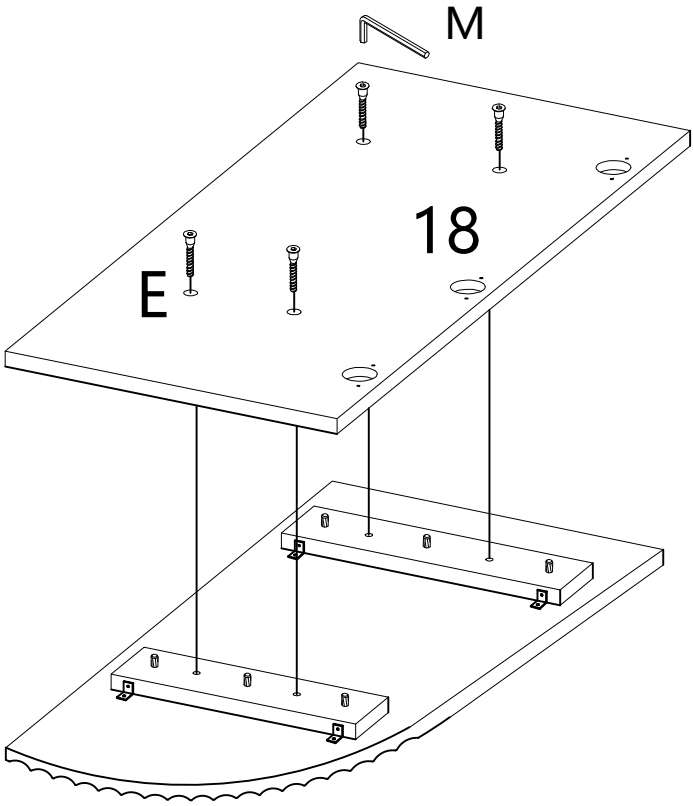

	M×1PC		N×8PCS
D×16PCS		B×6PCS	E×4PCS

STEP 19

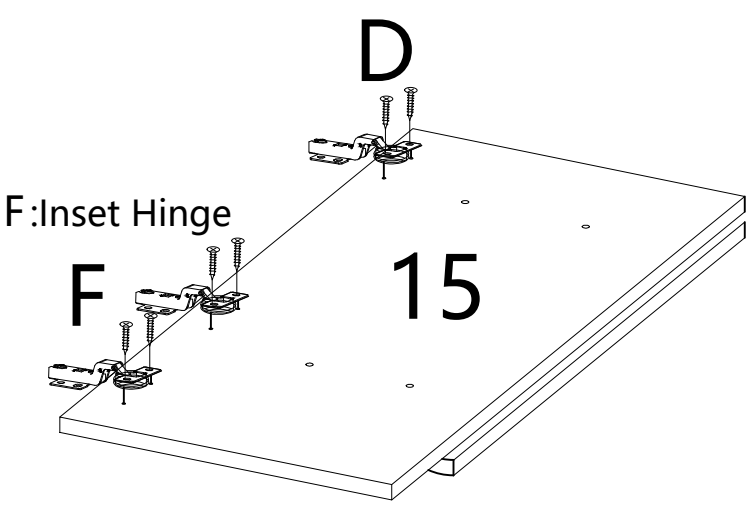

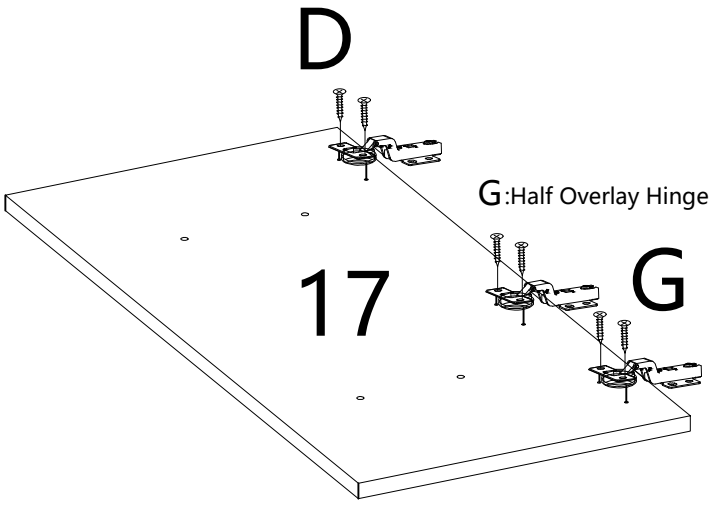

	F×3PCS		G×3PCS	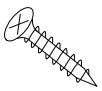	D×12PCS

STEP 20

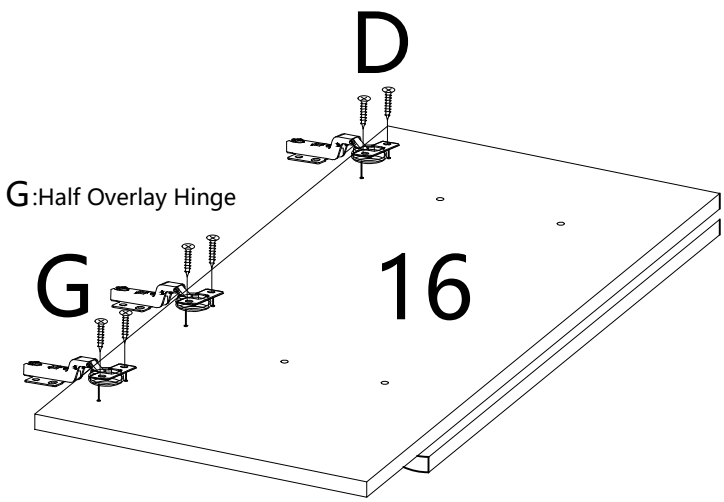

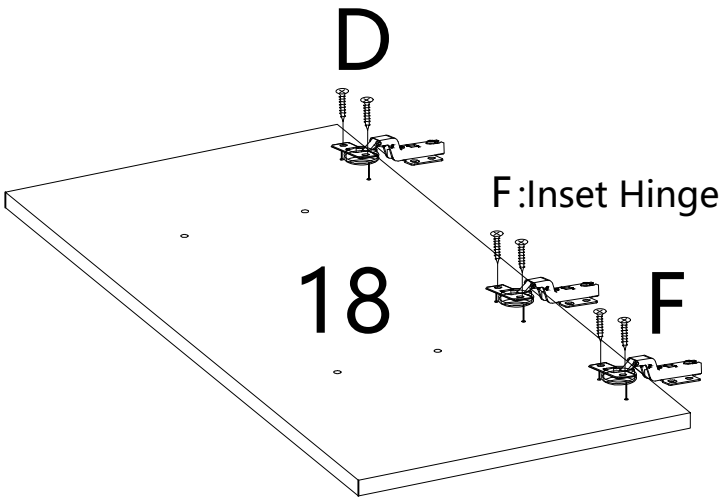

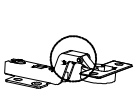	F×3PCS	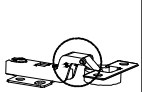	G×3PCS	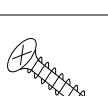	D×12PCS

STEP 21

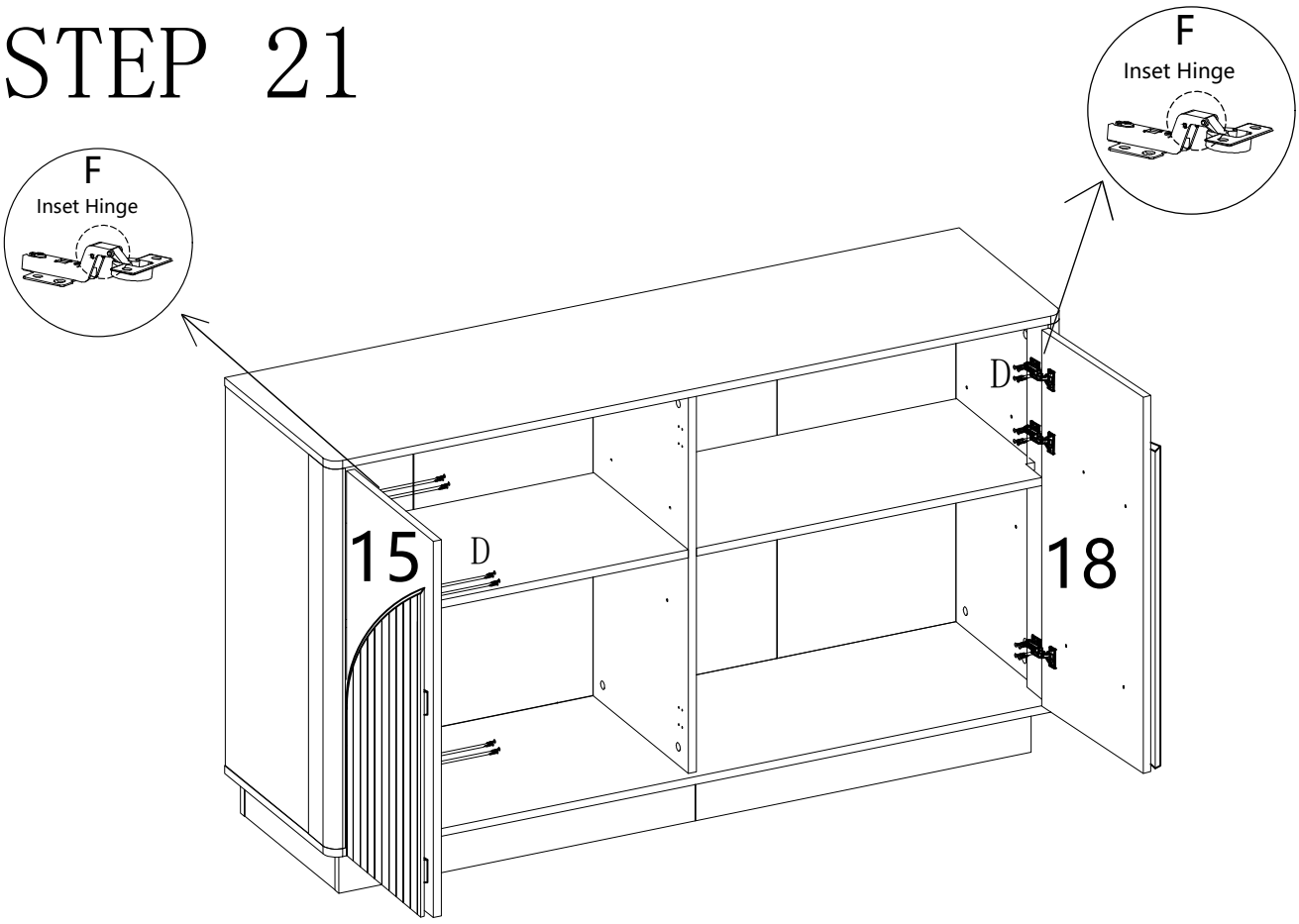

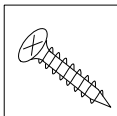

D×24PCS

STEP 22

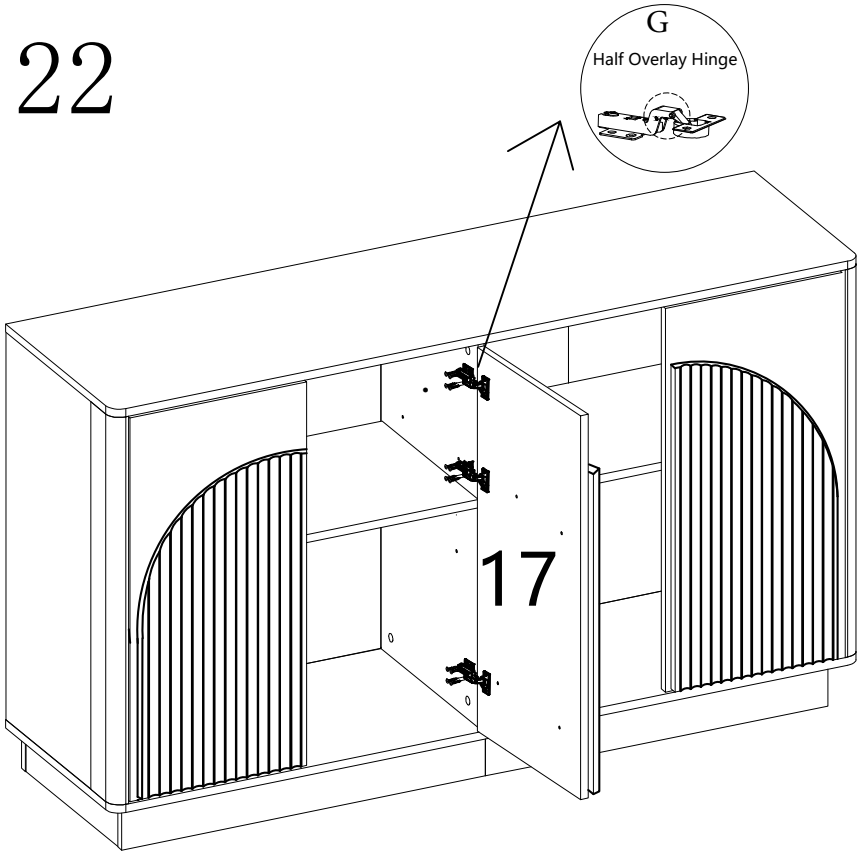

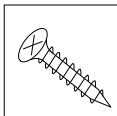

D×12PCS

STEP 23

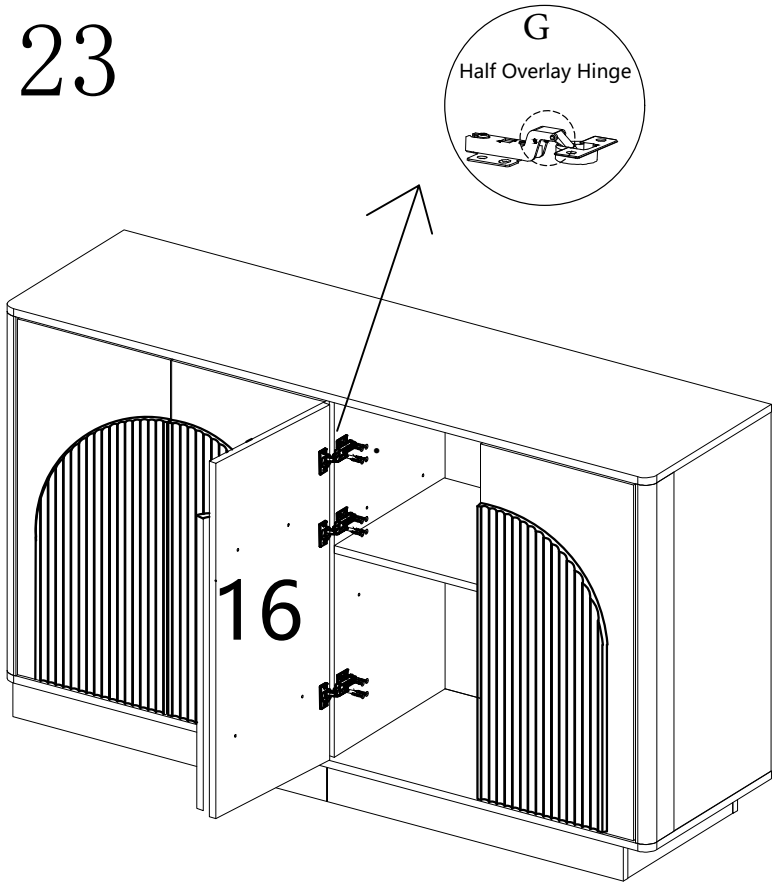

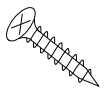	D×12PCS

STEP 24

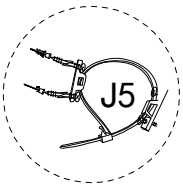

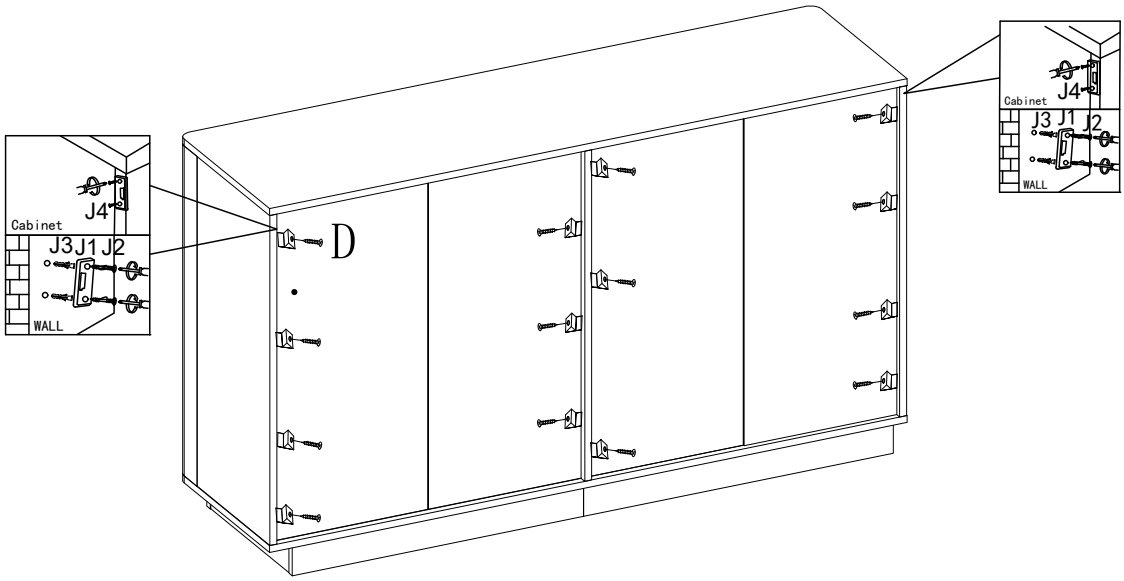

This step is very important to prevent the product from shaking

	H×14PCS	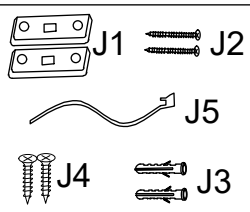	J×2PCS
	D×14PCS		

STEP 25

