CARE AND MAINTENANCE

Hardware may loosen overtime. Periodically check that all connections are tight. Wipe with a soft, dry cloth. To protect finish, avoid the use of chemicals and household cleaners. All hot serving dishes should be placed on a pad. Any liquid spilled onto the furniture should be cleaned up immediately with a damp cloth.

SAFAVIEH

ID : DSK9401A

DIMENSION : 27.99" X 18.89" X 76.92"

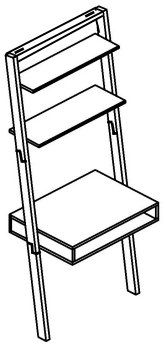

NOTICE

- Please make sure that you have all parts indicated before you begin assembly of this item
- This item should be assembled on a soft surface to prevent scratching the finish during assembly
- This item may require periodic tightening

THIS ITEM IS NOT A STEP LADDER. DO NOT STAND ON THIS ITEM. TO PREVENT AGAINST POTENTIAL INJURIES AND STRUCTURAL FAILURES, THIS ITEM SHOULD NOT BE USED FOR OTHER THAN ITS INTENDED PURPOSES. THIS ITEM IS FOR RESIDENTIAL SURROUNDINGS. PLEASE REGULARY INSPECT THIS ITEM FOR LOOSE OR MISSING SCREWS OR REIVETS, METAL FATIGUE, CRACKS, BROKEN WELDS, MISSING ATTACHMENTS AND GENERAL INSTABILITY, IMMEDIATELY REMOVE FROM SERVICE TO BE REPLACED OR REPAIRED. DO NOT EXCEED THE WEIGHT CAPACITY. FAILURE TO FOLLOW THESE WARNINGS COULD RESULT IN SERIOUS INJURY.

Part List and Hardware List

PIECE	DESCRIPTION	PICTURE	QUANTITY
A	Shelves A	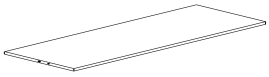	1x
B	Shelves B		1x
C	Desk	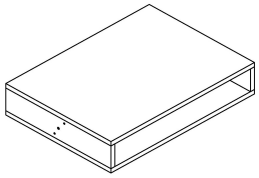	1x
D	Left Upper Leg	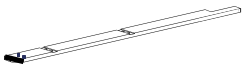	1x
E	Left Middle Leg	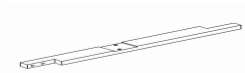	1x
F	Left Lower Leg	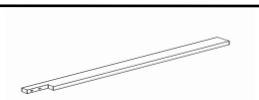	1x
G	Right Upper Leg	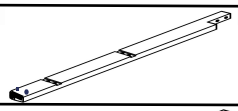	1x
H	Right Middle Leg	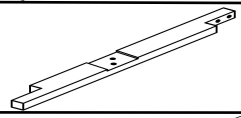	1x
I	Right Lower Leg	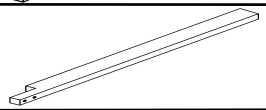	1x
J	Bar Top	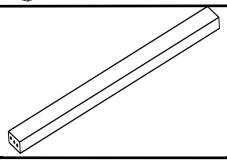	1x

HW 1	Bolt M6 x 35 MM		14x
HW 2	Dowel Ø8 x 32 MM	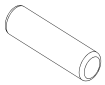	16x
HW 3	L Plate	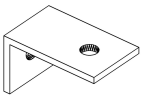	2x
HW 4	Fisher S6		2x
HW 5	Allen Key L.4 MM		1x
HW 6	Screw 8 x 1 1/4"		2x
HW 7	Screw 8 x 5/8”		2x
HW 8	Metal Plate		2x
HW 9	Screw 8 x 1/2”		20x
HW 10	Flat Washer 6 MM		16x
HW 11	LD Plate	Left 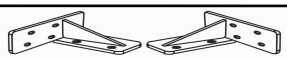 Right	2x
HW 12	Bolt M6 x 30 MM	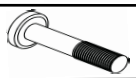	2x

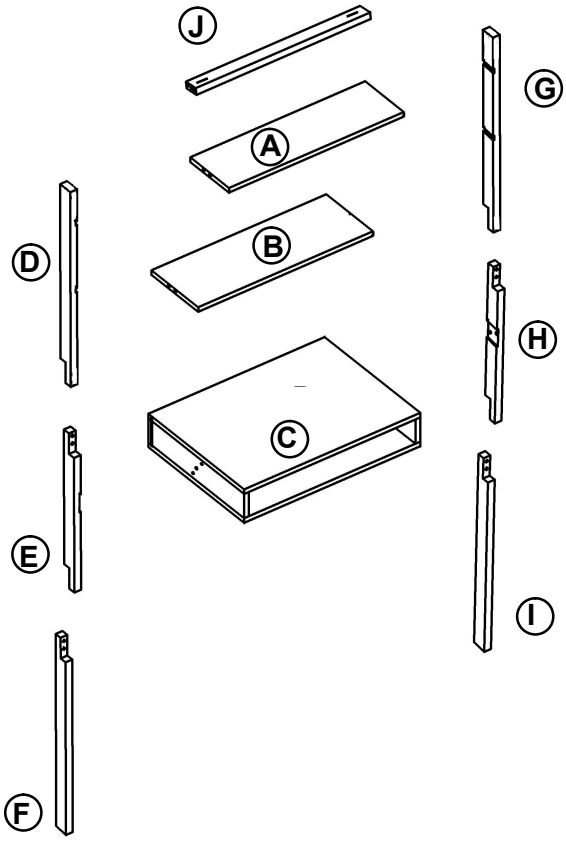

STEP 1

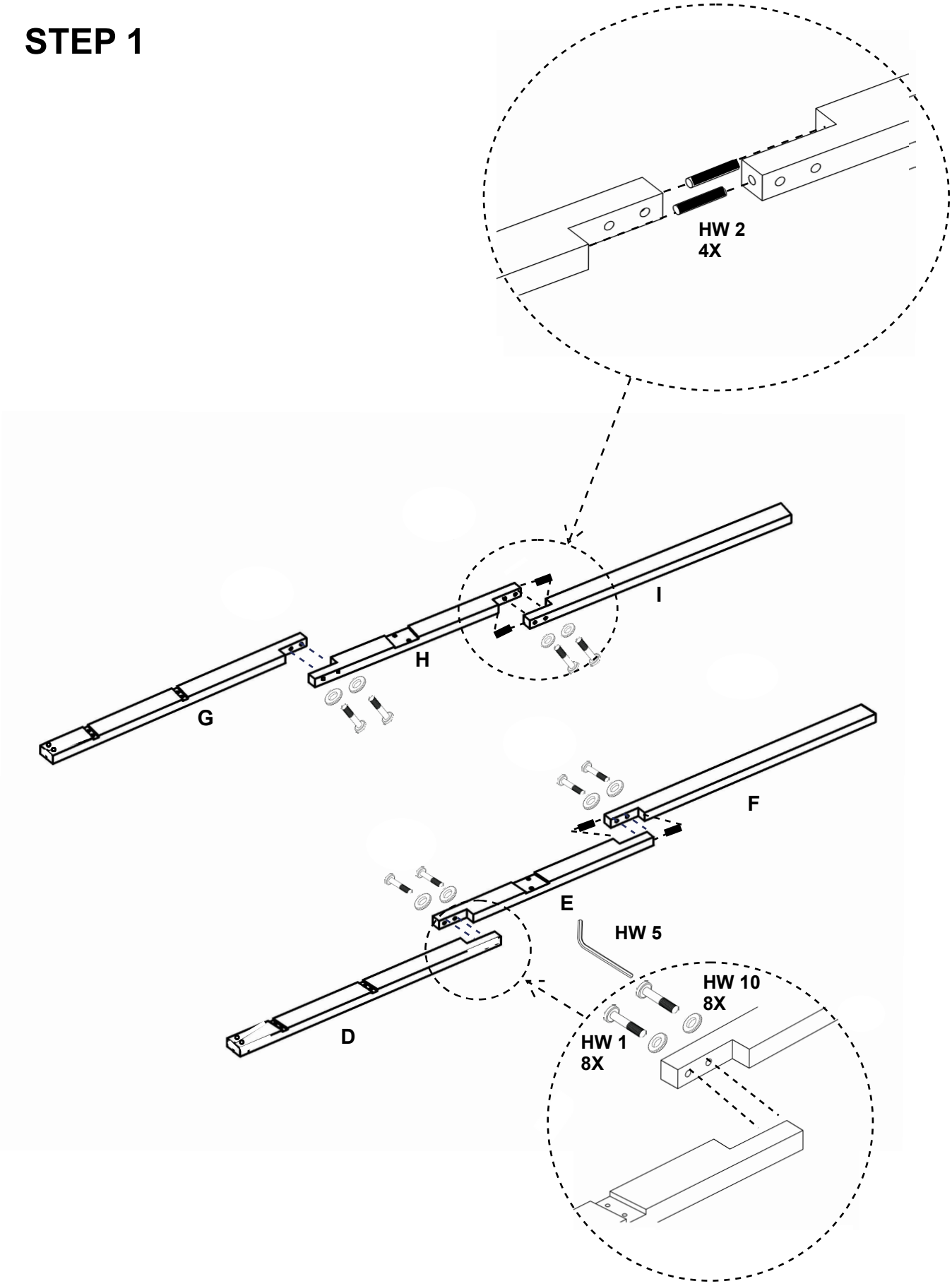

STEP 2

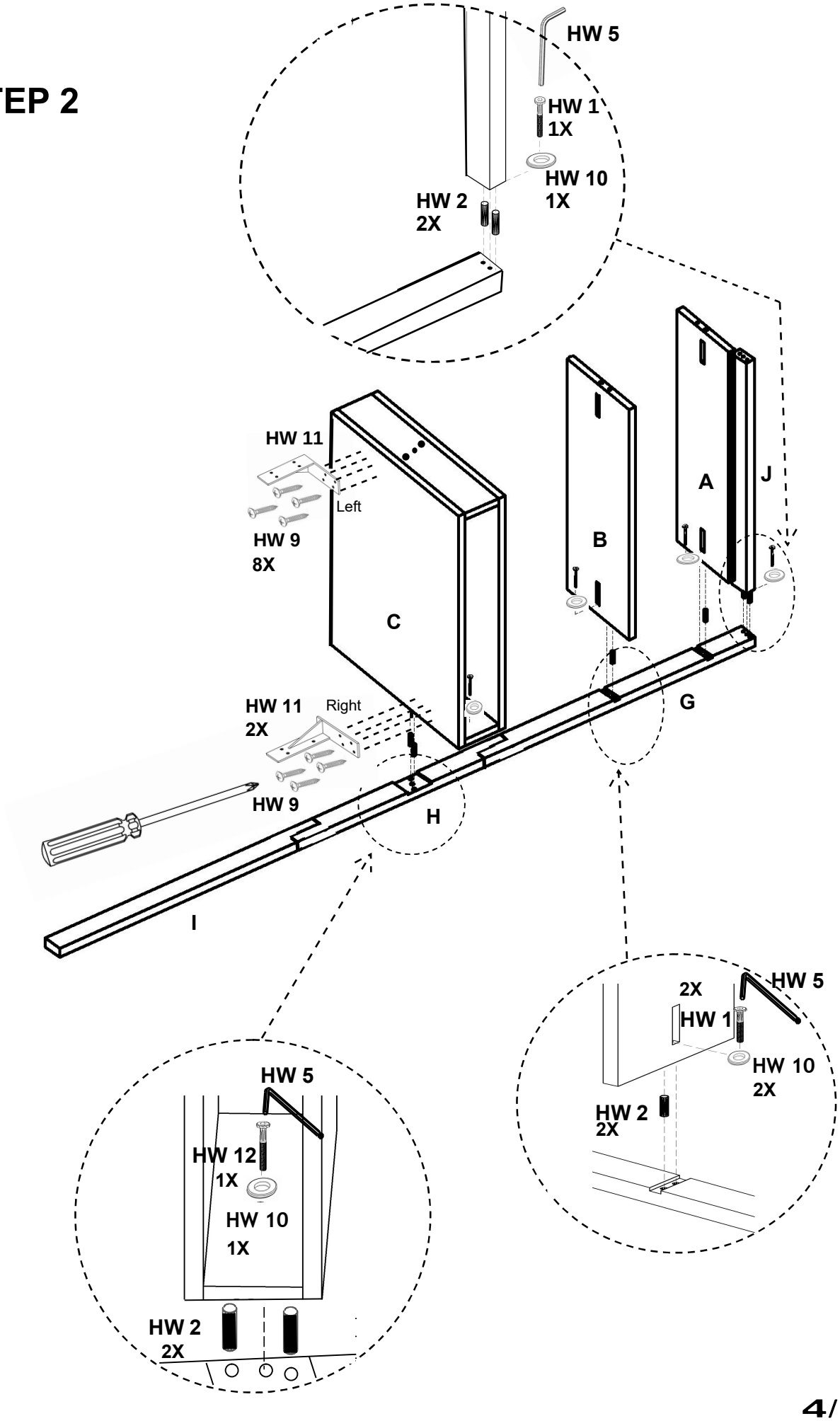
HW 5
HW 1
1X
HW 10
1X
HW 2
2X
HW 11
Left
HW 9
8X
C
B
A
J
HW 11
2X
Right
HW 9
H
G
I
HW 5
HW 12
1X
HW 10
1X
HW 2
2X
2X
HW 5
HW 1
HW 10
2X
HW 2
2X

STEP 3

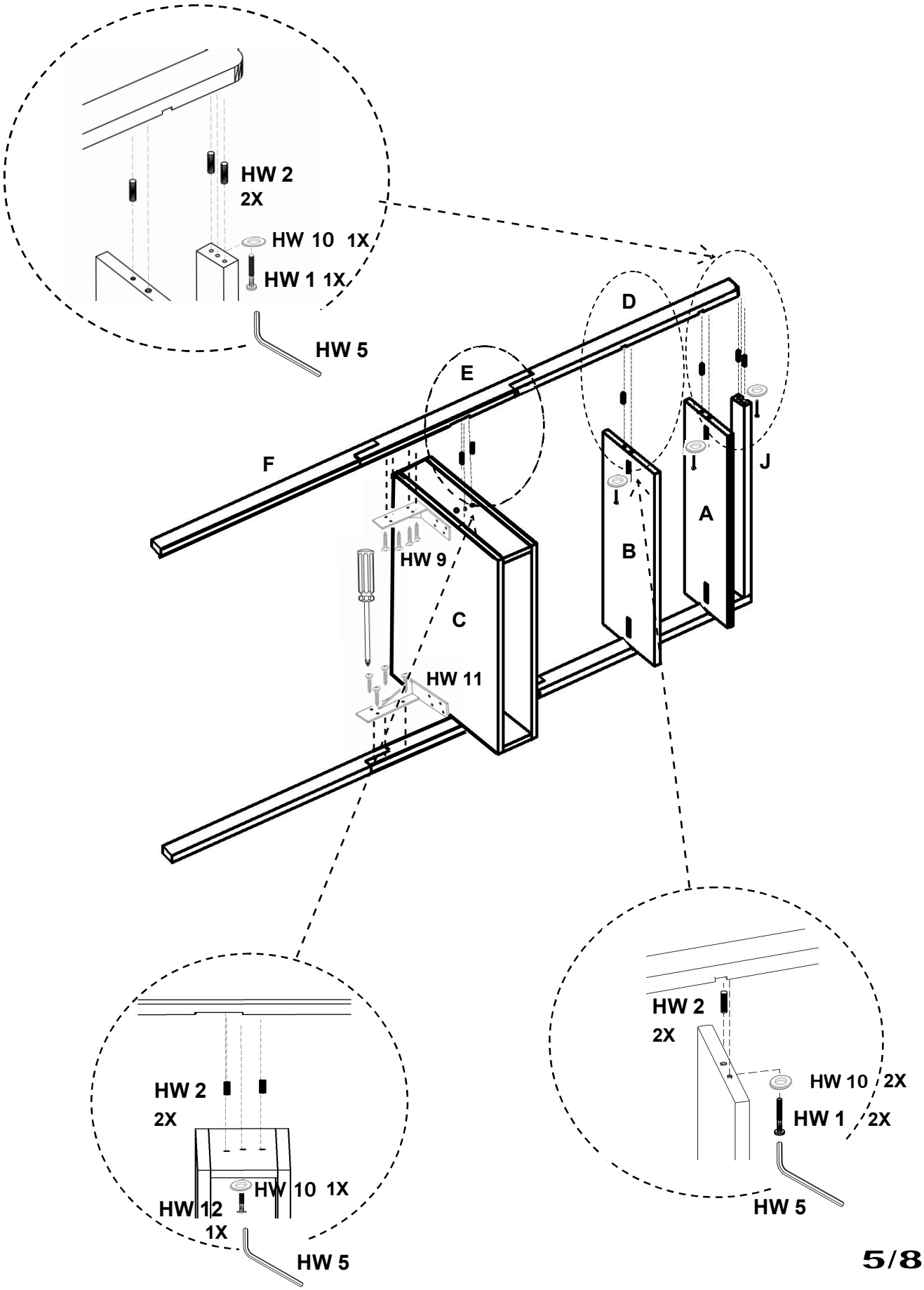
HW 2
2X
HW 10 1X
HW 1 1X
HW 5
D
E
F
J
A
B
HW 9
C
HW 11
HW 2
2X
HW 10 1X
HW 12
1X
HW 5
HW 2
2X
HW 10 2X
HW 1 2X
HW 5

STEP 4

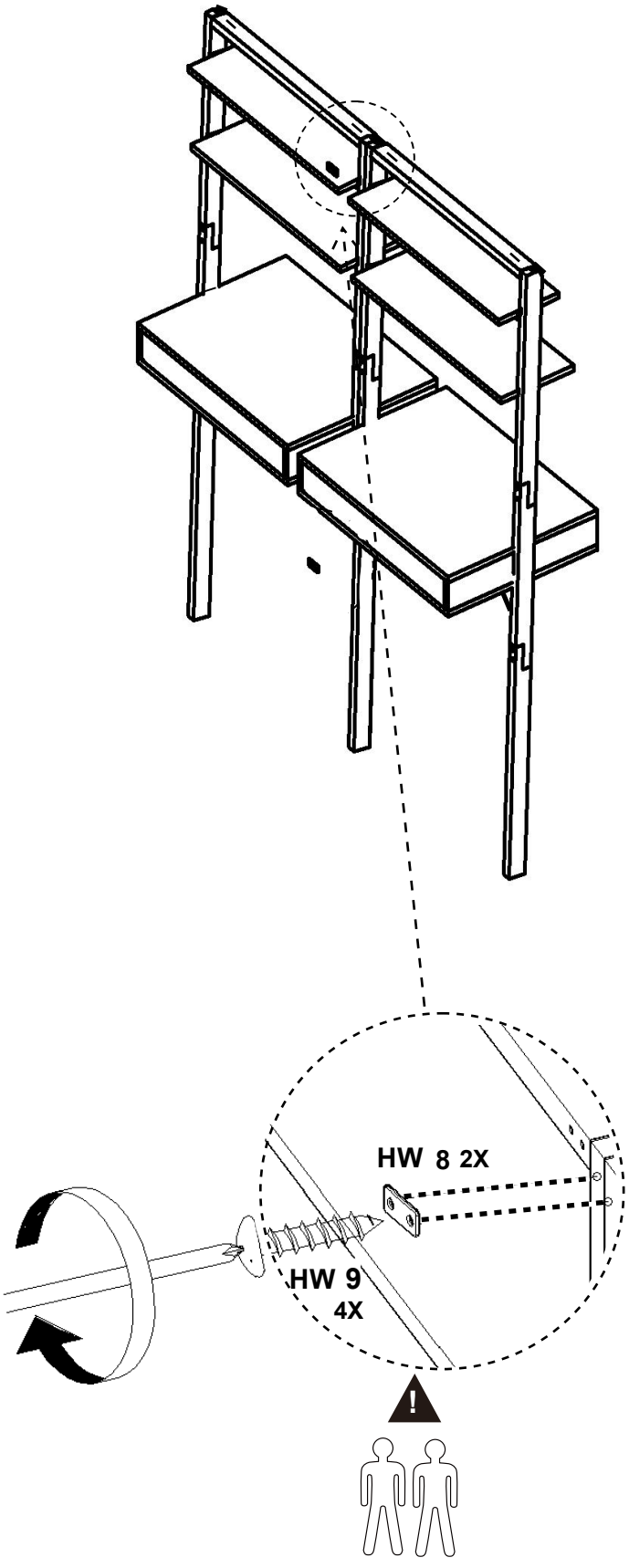

STEP 5

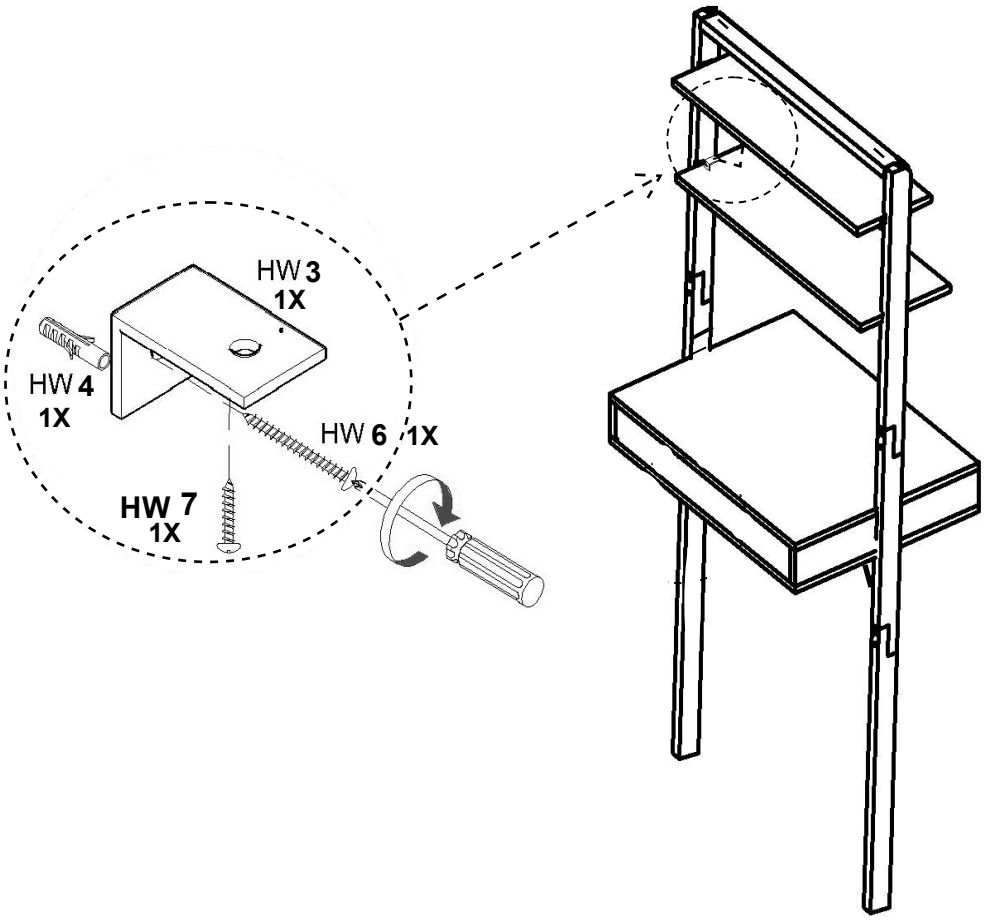

MAXIMUM WEIGHT

