Natures Composites

Sustainable Outdoor Living

Visit our resources page
for more information

TRADITIONAL THREE-BOARD RANCH RAIL

INSTALLATION GUIDE (08/25)

Our products and/or processes are protected by the following patents, as well as other patents that are pending: US 11,053,707; US 12,110,703; US 12,084,880. For any further information or questions please visit www.naturescomposites.com or call us at (307) 338-2608.

Natures Composites
Sustainable Outdoor Living

Watch out for green boxes for our Frequently Asked Questions!

Composite Traditional Three-Board Ranch Rail Installation Guidelines (4 ft. H x 5.75 ft. W)

Nominal: 48" x 69"

COMPONENTS

ITEM	QTY	DESCRIPTION	NC PART
Complete Product		**Composite Traditional Three-Board Ranch Rail**	100321XX30600-T
A	1	Commercial Grade Three Board Line Post 5"x 5"x 64"	300755XX0643L
B	3	Square Edge Board 1" x 6" x 67"	300341XX067
C	1	Horse Post Cap	ACPC755XXPOSTCAP-HORSE
D	12	Board Arch Clip	200726BK00C
E	2	Screw Horse Post Cap	SCREW HORSE CAP
F	**NOT INCLUDED**	**SOLD SEPARATELY** 5x5 (64 inches) CORNER POST	300755XX0643C
G	**NOT INCLUDED**	**SOLD SEPARATELY** 5X5(64 inches) START / END POST	300755XX0643SE

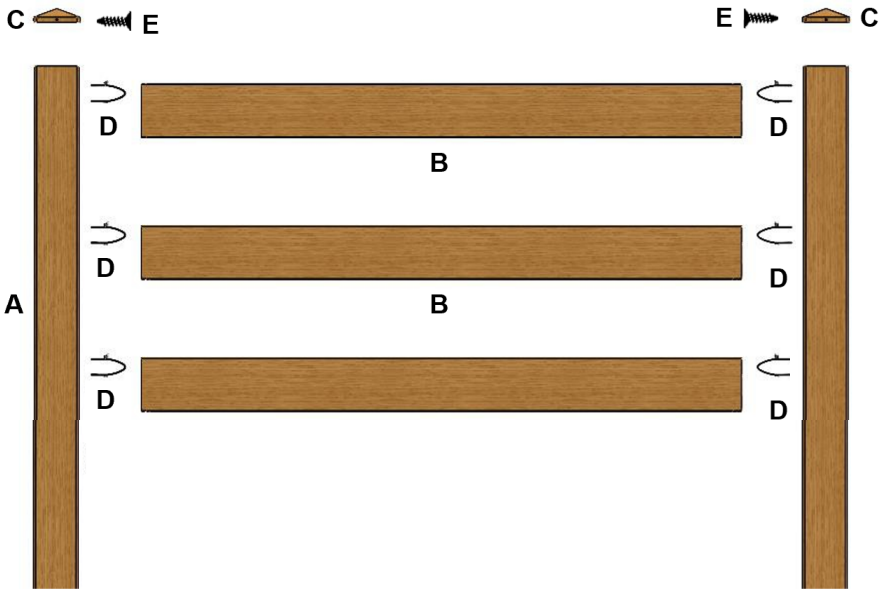

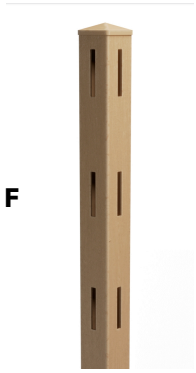

Note: Corner Post (left) and Start/End Post (right) and not included in this package and sold separately.

Natures Composites
Sustainable Outdoor Living

BEFORE YOU BEGIN

Verify Underground Utilities
Use aids such as local building departments, utility companies, or utility location services to ensure the area is free from underground lines or hazards.

1. **Locate Property Lines**
   Ensure the fence is installed within your property boundaries to avoid encroachment and comply with legal requirements.
2. **Consult Local Building Codes**
   Review local codes to ensure the fence and gate installation meets all requirements. Obtain any necessary permits before starting the installation.
3. **Wear Appropriate Safety Equipment**
   Always wear gloves, safety goggles, and work boots to avoid injuries during installation.

TOOLS REQUIRED

Tools for Preparing the Fence and Post Burial

- Tape Measure
- Post Hole Digger & Shovel
- **Post Bubble Level** (for ensuring posts are vertically aligned at 90 degrees)
- Level and String Line
- Wheelbarrow
- Stakes or Markers
- We recommend using a **power tool** for both operations to ensure proper installation of the fasteners.

FENCE LOCATION

1. **Mark the Fence Layout:** Use stakes and a string line to outline the fence location. The string helps ensure the fence remains straight during installation.
2. **Locate Gate Placement:** Mark the post hole locations for gate posts according to the gate installation instructions.
3. **Mark Corners and Ends:** Identify the locations of corner and end posts.
4. **Mark Intermediate Fence Posts:** Posts should be placed no wider than **69 inches (5.75 feet)** outside to outside posts for each fence panel.

Can I paint my fence?

No! Painting is not advisable. Our products come pre-finished with durable, lasting color and a textured, non-reflective surface. They're designed to maintain their appearance without the need for painting, staining, or sealing—just occasional cleaning with soap and warm water.

Natures Composites
Sustainable Outdoor Living

Why is my 69” center to center post centering so important?
If your posts are not 69” center to center your boards might not fit properly or be difficult to install. We recommend working one panel at a time starting from one end of your line.

2. POST INSTALLATION

1. **Dig 12” diameter holes** at **16” deep** in all marked post hole locations.
2. **Verify proper hole depth** by:
   - Ensuring that **48”** of the post remains above ground, with **16”** securely anchored beneath the surface. This deeper embedment provides extra stability, exceeding the standard 1/3 rule.
   - Using a **level** to align the tops of all posts in a consistent, level plane across the fence line. Ensure the posts are Plumb and level.
   - Note: This product is not recommended for sloped terrain.
3. **Fill the hole with concrete** to approximately **2” below ground level**. Before the concrete sets:
   - Adjust the post to ensure it is perfectly **plumb** and aligned with the string line for a straight and secure fence.
4. Allow the **concrete to properly cure** according to the manufacturer’s instructions before proceeding with the next steps.

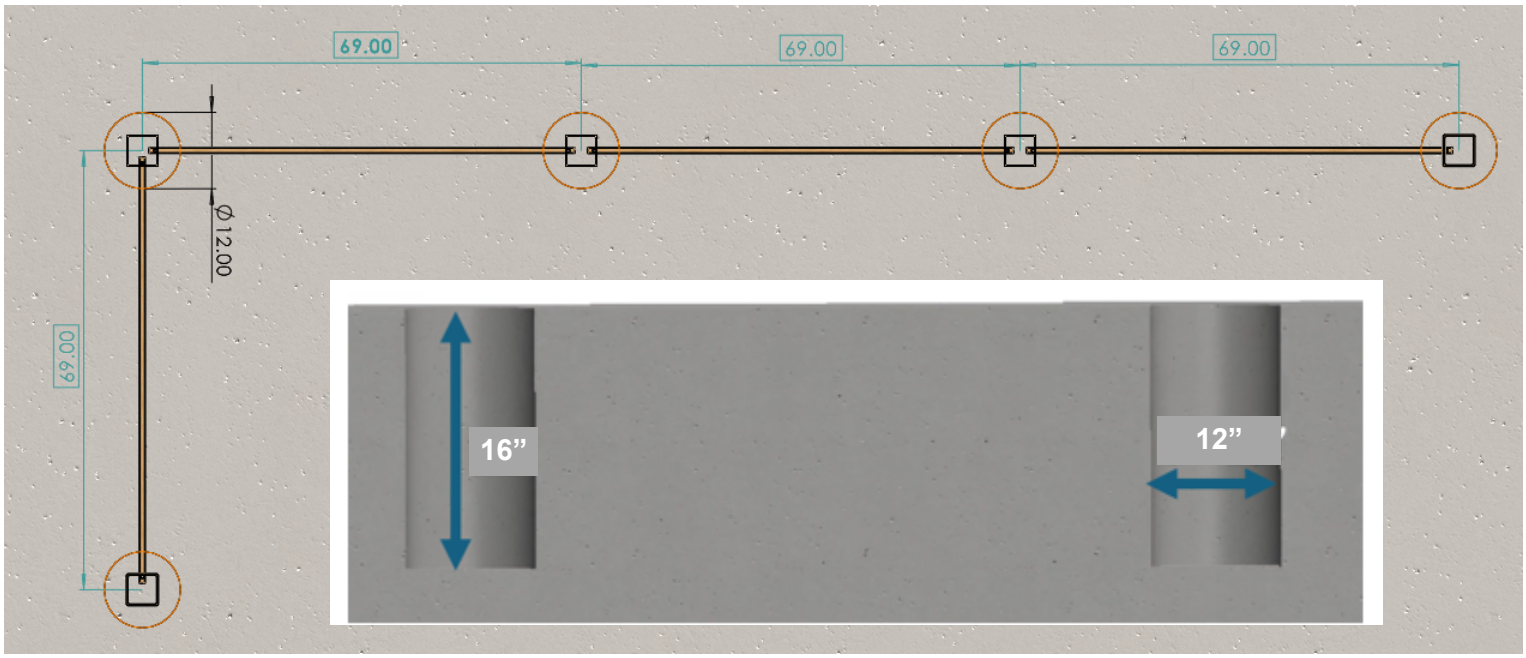

Natures Composites
Sustainable Outdoor Living

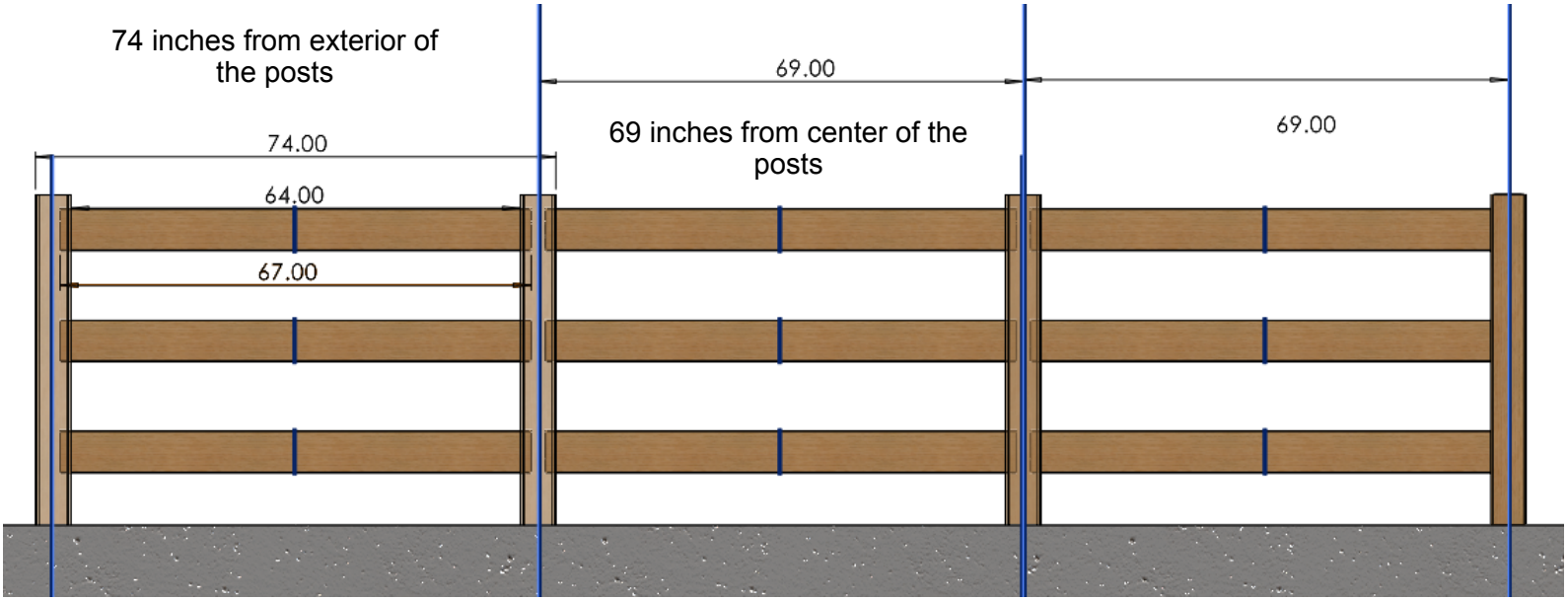

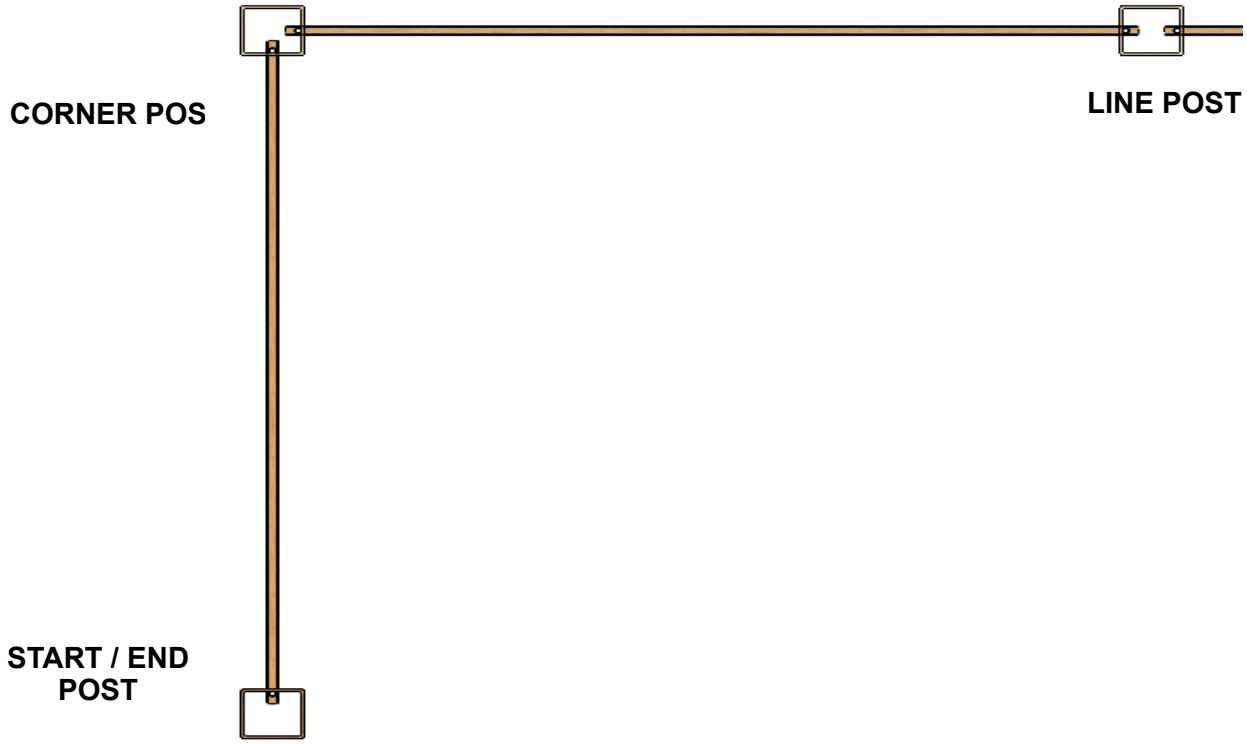

3. BOARD INSTALLATION

1. Prepare the Arch Clips:

- The Arch Clip is a weather-resistant polymer component, designed to securely hold the boards in place. It features a latch-style mechanism with a ramp, allowing it to slide into the board cavity. Once inserted, the latch will pop up into the pre-drilled hole, locking the clip in place.

2. Insert the Arch Clips:

- Before installing the boards into the post grooves, manually insert two arch clips into the cavity of the square edge board. The holes for the arch clip will be pre-drilled from the factory, ensuring a precise fit. No tools are required—just apply enough pressure with your fingers to slightly deform the clip, allowing it to fit snugly into the cavity.
- Important: Two arch clips should be installed on both sides of the board. We recommend installing it on the top side, ensuring the latch is pointing upward when sliding it into the board cavity.

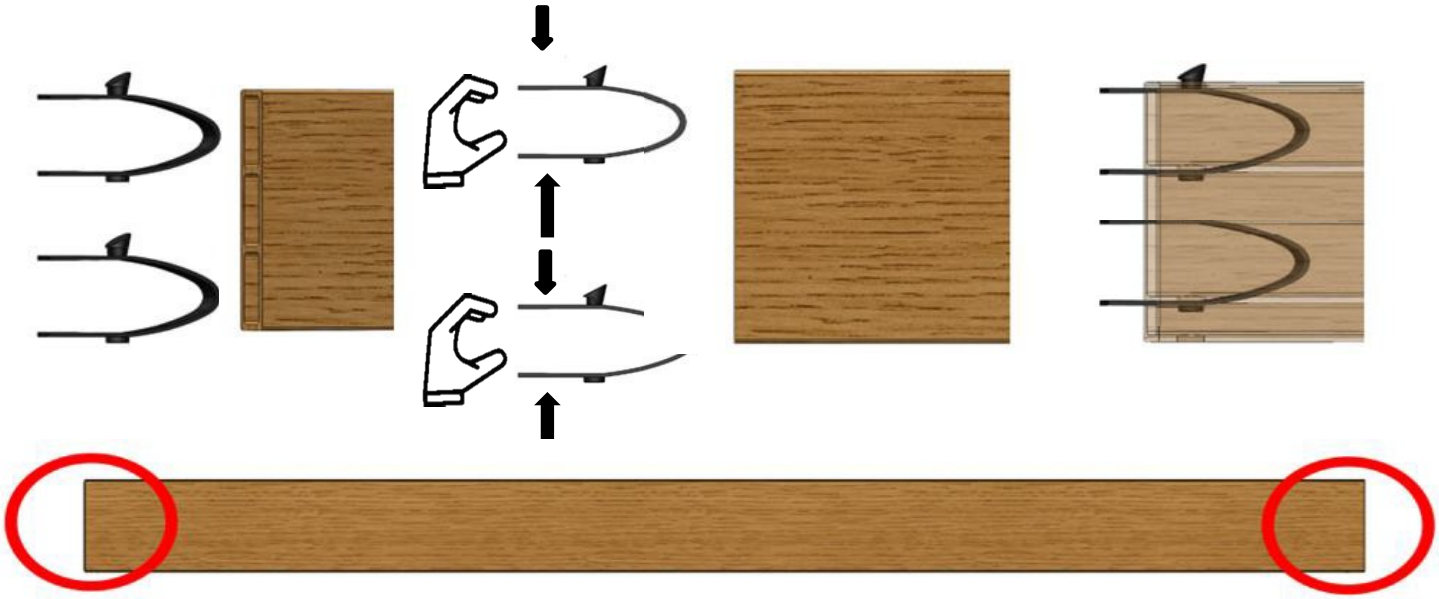

For any further information or questions please visit www.naturescomposites.com or call us at (307) 3382608. Our products and/or processes are protected by the following patents, as well as other patents that are pending: US 11,053,707; US 12,110,703; US 12,084,880

Natures Composites
Sustainable Outdoor Living

3. BOARD INSTALLATION

- Position the Board: Align each square edge board with the post slots.
- Position and Insert the Board:
- The center-to-center spacing between posts should be 69 inches. Each board is 67 inches long, so you will need to slide one side of the board deep into the cavity of one post first.
- Maneuvering the Board: Once one side is in, you will need to maneuver the other side of the board into the groove of the second post. This step requires enough space on both sides to ensure the board fits securely within the post cavities.
- During this process, the arch clip will automatically click into place after it clears the 5x5 post wall, ensuring the board is securely locked in.

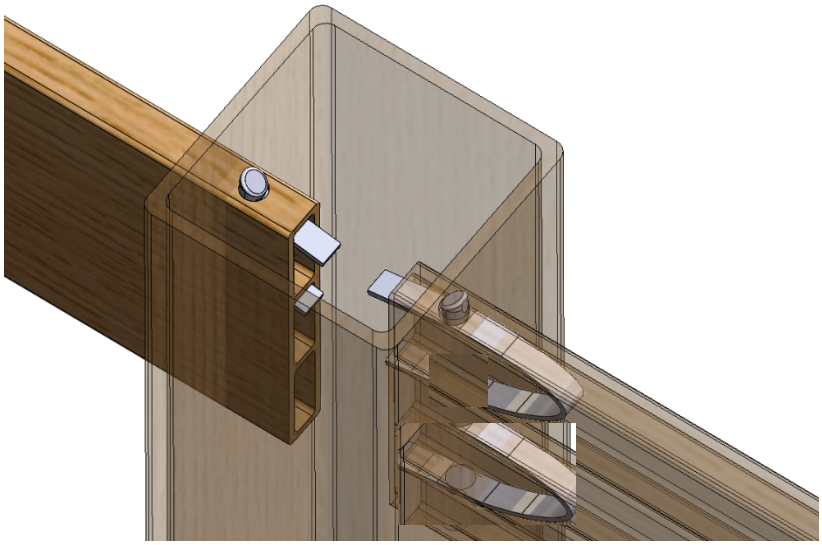

Why should I start installing the boards from one end of the rail?
If you don't work on one panel at a time starting from one end and moving along you will potentially have difficulty installing the rails if your posts are not perfectly aligned at 69" center to center.

For any further information or questions please visit www.naturescomposites.com or call us at (307) 3382608. Our products and/or processes are protected by the following patents, as well as other patents that are pending: US 11,053,707; US 12,110,703; US 12,084,880

Natures Composites
Sustainable Outdoor Living

4. Install the Top Cap

1. Positioning the Post Cap: Place the post cap securely on top of the 5x5 post, ensuring it is pushed all the way down for a snug fit.
2. Securing the Cap: Nature's Composites provides 2 Phillips screws to fasten the post caps.
3. Pre-drilling for the Screws: We recommend pre-drilling holes using a 1/8-inch bit to make it easier to attach the screws. Drill two evenly spaced holes before securing the screws, ensuring a stable attachment.

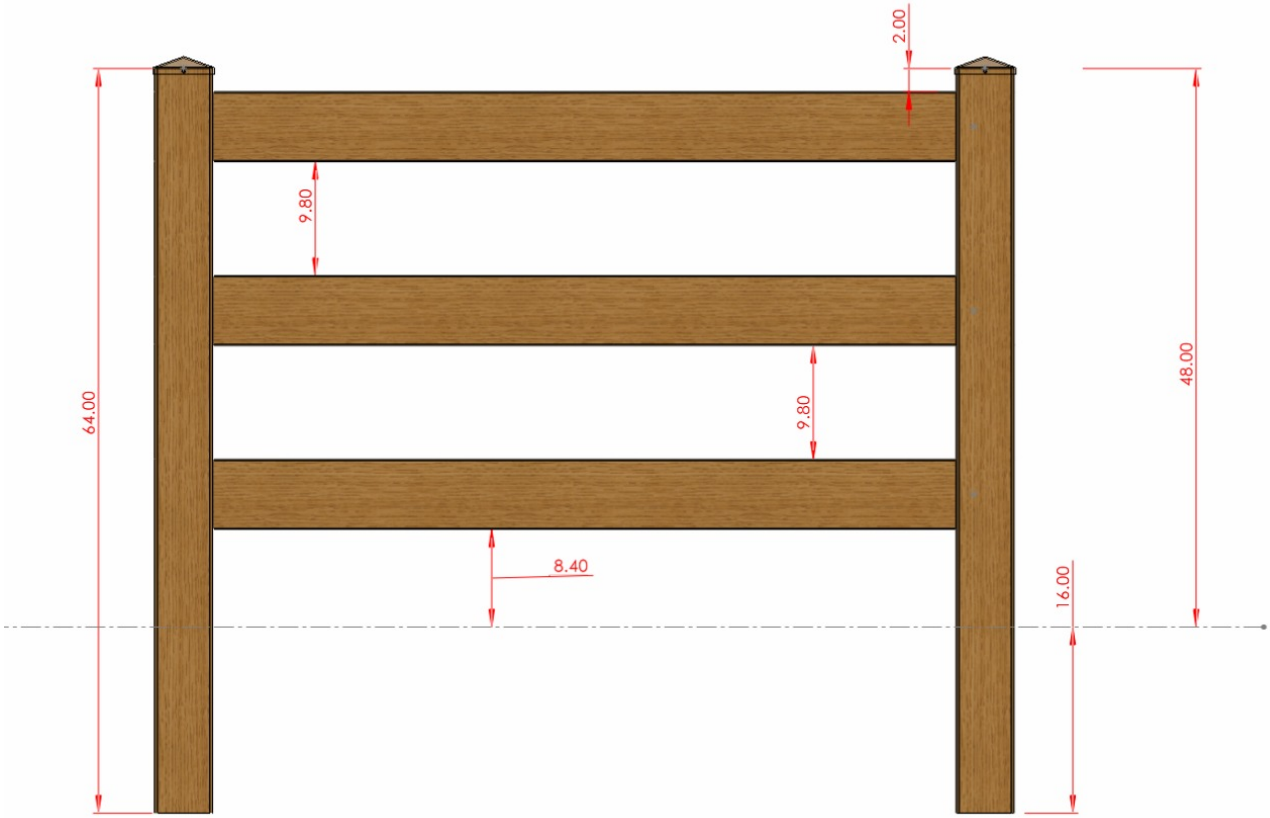

Natures Composites
Sustainable Outdoor Living

SOLD SEPARATELY

This pack includes a line post. To finish a job, you will need to purchase additional posts separately, such as start/end posts or corner posts. Line posts are required whenever there is more than 1-panel, as they are routed on both sides to accommodate 2-panels. Start/end and corner posts, sold separately, are used depending on your fence layout. This approach allows you to customize your fence, making it both cost-effective and perfectly suited to your property.

Fence Post Designation and Placement: This diagram is included to help the installer understand where each type of post is required for proper fence installation. Additionally, it illustrates the placement of a gate that is hung between the start/end posts.

1. **Corner Posts (Green)**:
    - **Placement**: Positioned at each corner of the lot.
    - **Purpose**: These posts are crucial as they provide the primary structural support for the entire fence. They help maintain the shape and alignment of the fence at turns and changes in direction

2. **Line Posts (Blue)**:
    - **Placement**: Spaced evenly along the sides of the lot between the corner posts.
    - **Purpose**: Line posts serve to keep the fence firm and aligned. They provide additional support along the fence's length, ensuring that the panels remain straight and secure between the corners.
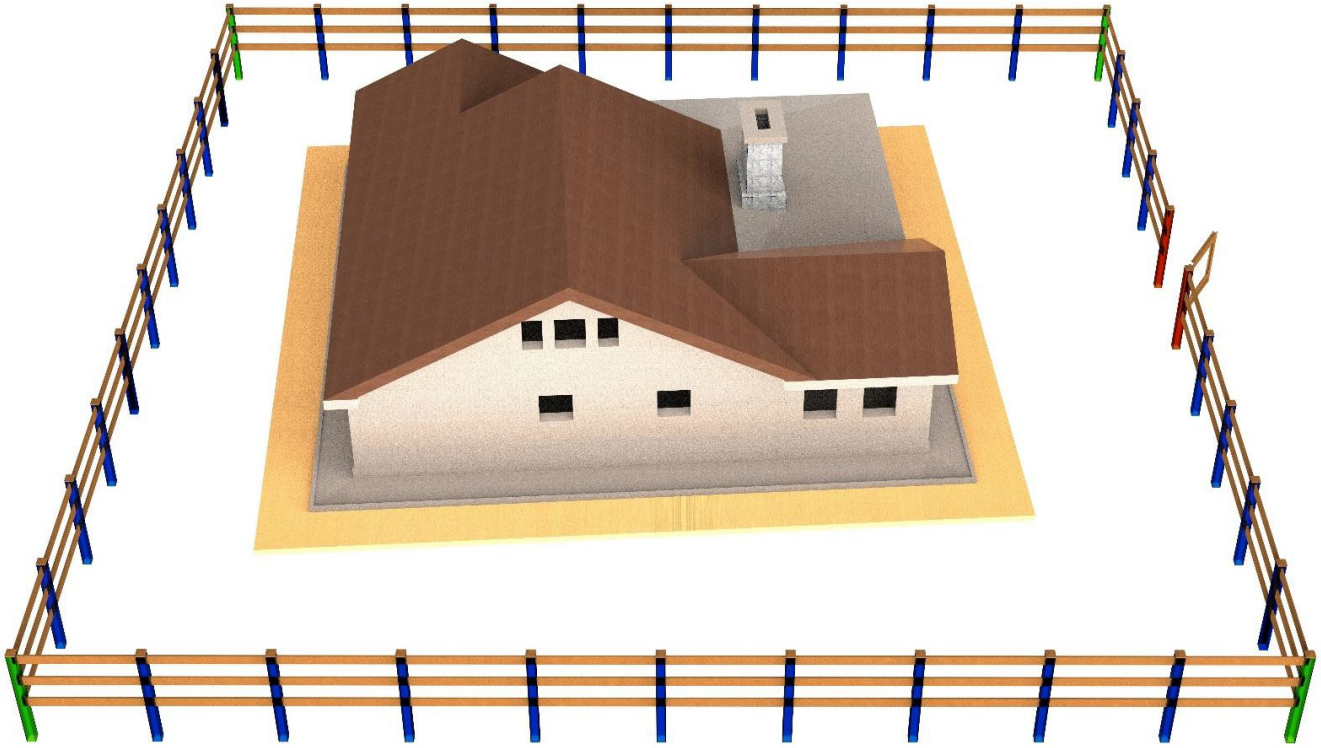
3. **Start/End Posts (Red)**:
    - **Placement**: Located at the beginning and end of each fence section.
    - **Purpose**: These posts are vital for securing and defining each segment of the fence. They help anchor the panels in place and mark the boundaries of each section, contributing to the overall stability and integrity of the fence. The gate is hung between these posts, facilitating access through the fence.