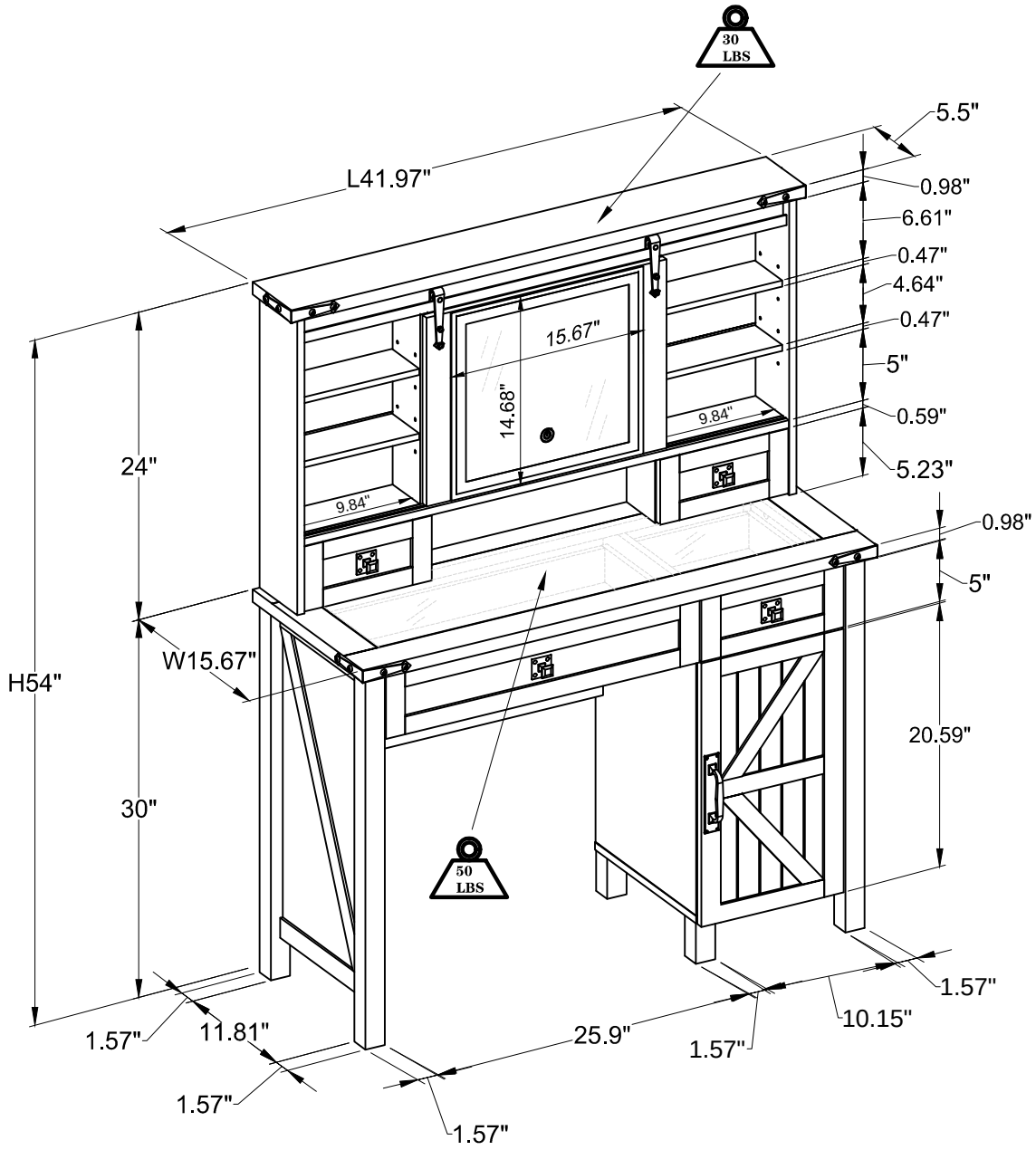
30 LBS
50 LBS
L41.97"
5.5"
0.98"
6.61"
0.47"
4.64"
0.47"
5"
0.59"
5.23"
0.98"
5"
20.59"
15.67"
14.68"
9.84"
9.84"
24"
W15.67"
H54"
30"
1.57"
11.81"
1.57"
1.57"
25.9"
1.57"
10.15"
1.57"

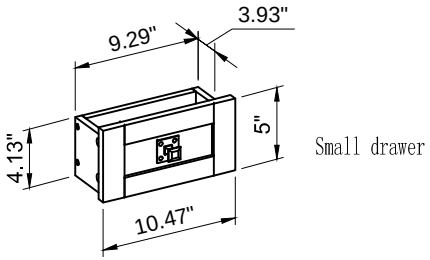
9.29"
3.93"
4.13"
5"
10.47"
Small drawer

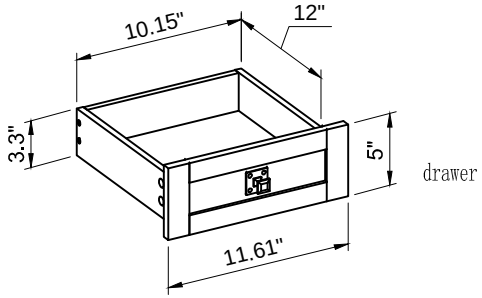
10.15"
12"
3.3"
5"
11.61"
drawer

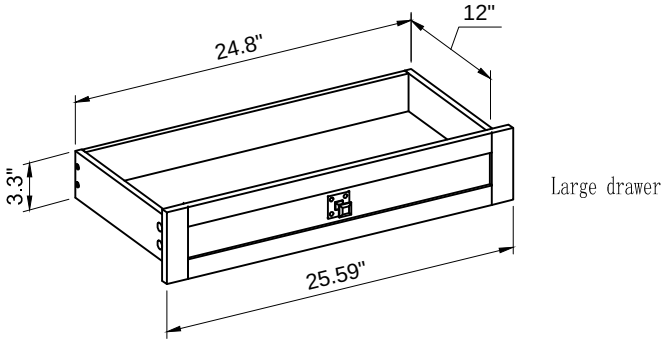
24.8"
12"
3.3"
25.59"
Large drawer

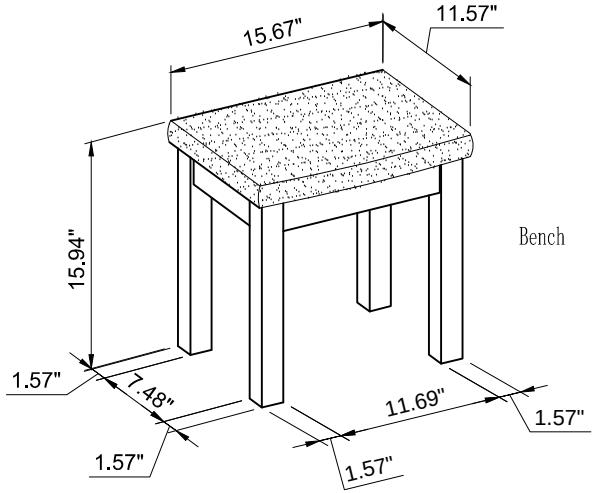
15.67"
11.57"
15.94"
Bench
1.57"
7.48"
1.57"
11.69"
1.57"
1.57"