PART NO. B05758

WASHING MACHINE VALVE BOX

- Right Outlet
- 1/2" PEX

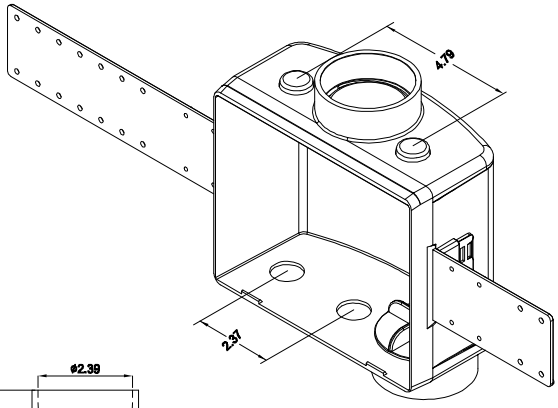

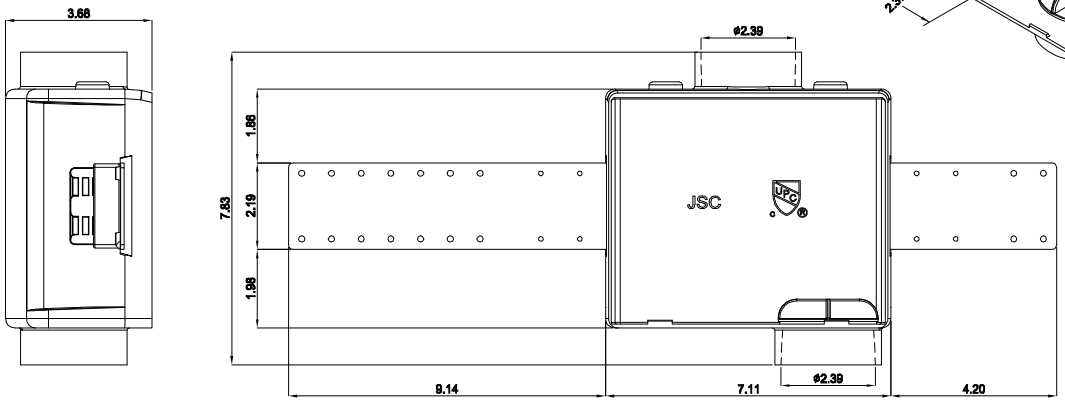

A World and Main company

3249 Moody Parkway | Moody, AL 35004 | 800.355.6637 | Fax 800.462.6991| www.jonesstephens.com