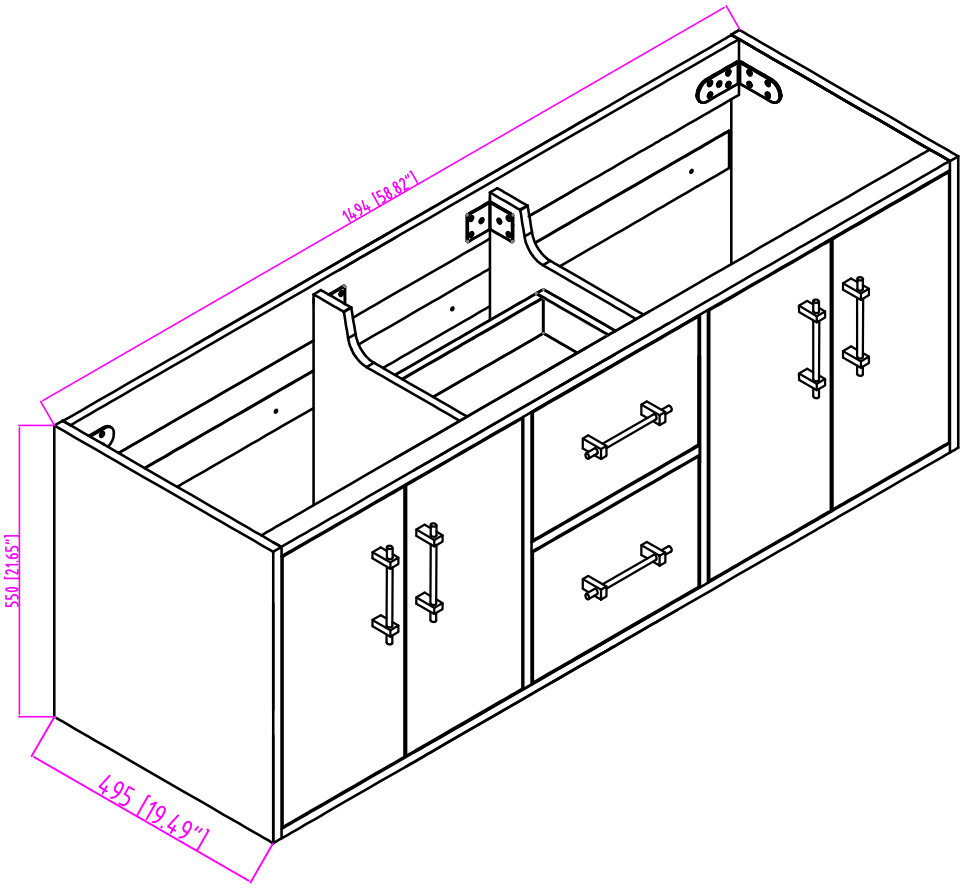

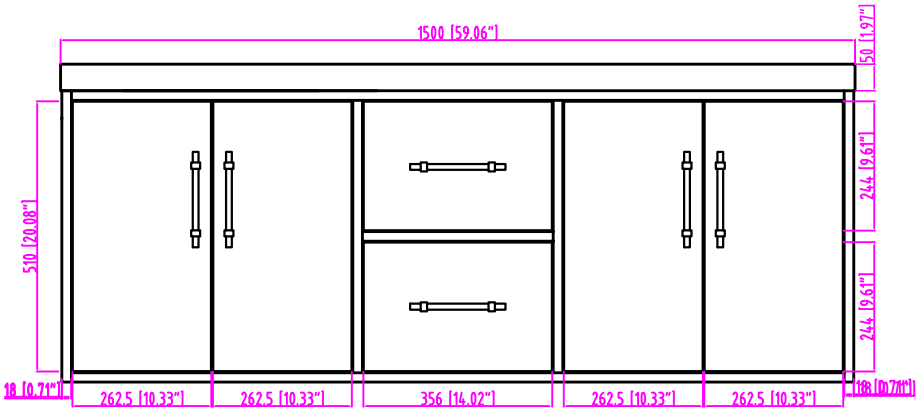

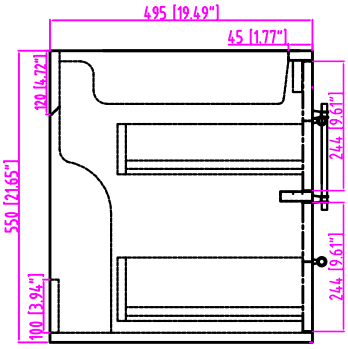

Victoria-60D