Manufactured by: Backyard Discovery
3305 Airport Drive, Pittsburg, KS 66762 800-856-4445

Basepoint Business Centre: Rivermead Drive,Westlea, Swindon SN5 7EX Phone: 0800-118-2476
J.P. Coenstraat 7, The Bridge, The Hague, 2595 WP, Netherlands Phone: 08005678990

SAVANNAH GREENHOUSE

MODEL # : 2404229

For Horticulture Use Only

WARNING
Cancer and Reproductive Harm
www.P65Warnings.ca.gov

Please visit www.backyarddiscovery.com
For the most up to date assembly manual, to register your product, or to order replacement parts ***Para obtener instrucciones en español, visite www.backyarddiscovery.com***

BILT®
EASY STEP-BY-STEP
3D INTERACTIVE INSTRUCTIONS
DOWNLOAD THE FREE APP
App Store Google play

OWNER'S MANUAL - BASIC SETUP DIMENSIONS & ASSEMBLY NOTES

It is critically important that you start with <u>square and level</u> footings or concrete pad to attach your structure

1. **Check you local building and city codes for permit requirements or restrictions, including any Home Owner's Association (HOA) restrictions.**
2. **Select a location with lots of sun, good drainage, and the ability to create a level, firm surface for your greenhouse.**
   - **A firm, level surface is critically important to the longevity of your greenhouse**
   - **Ensure it is accessible on all sides to clean and conduct annual maintenance**
   - **Consider a site location with a close proximity to both water and electrical sources**
   - **Make sure site drains well and avoid low lying areas**
   - **For recommended area for site preparation see ANCHORING LAYOUT page**
3. **Before preparing your site - double check for underground utilities (ex: gas, cable, or sprinkler lines)**
4. **Pay close attention to the items needed for each step. Make sure you are using the correct hardware for each step. Using incorrect hardware may result in improper assembly.**
5. **Permanently Anchoring your Greenhouse:**
   - **The hardware to mount your greenhouse permanently to a concrete surface is included. This is the recommended anchoring method.**
   - **The hardware to mount your greenhouse into a ground surface, such as through gravel into the ground, is included.**
     - **It is NOT recommended to set your greenhouse directly on soil or grass as this will shorten the lifespan of your greenhouse.**
   - **The hardware to mount the greenhouse to a wood deck is NOT included and will need to be purchased separately. You must ensure there is ample structural support under the deck before permanently attaching.**

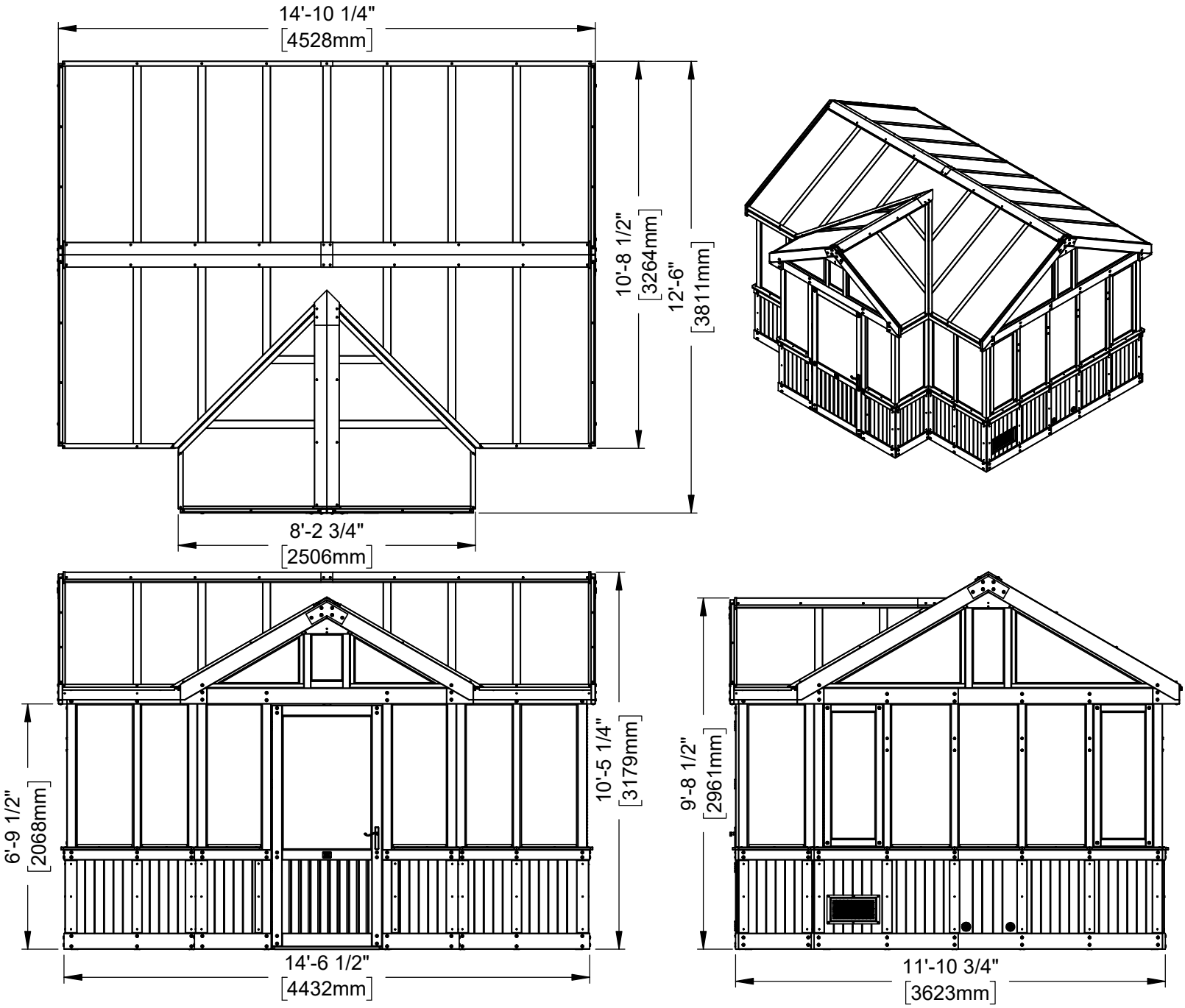

OWNER'S MANUAL - ANCHORING LAYOUT

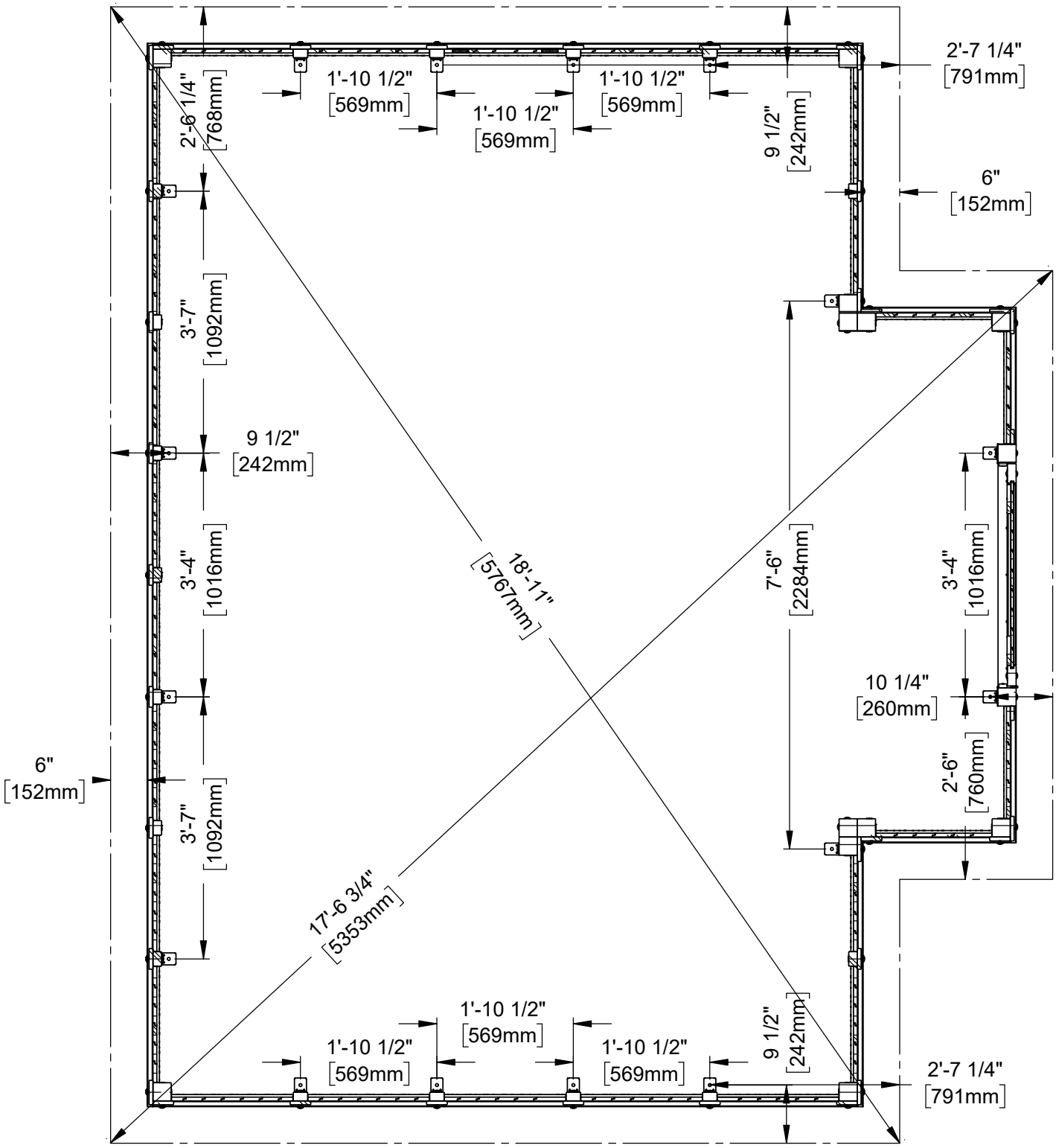

OWNER'S MANUAL - PARTS IDENTIFICATION

WOOD COMPONENTS (NOT TO SCALE)

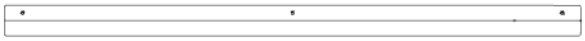

AA01 DOOR STOP - W4L21284
(x1) 1 7/8"x1 15/16"x37" (47x50x940)

AJ01 WINDOW SILL - W4L20901
(x2) 1 7/16"x4"x24 3/16" (36x102x615)

AJ02 WINDOW SILL - W4L20908
(x2) 1 7/16"x4"x24 3/16" (36x102x615)

CB01 WINDOW TRIM - W4L20881
(x4) 5/8"x3"x51 3/8" (16x76x1305)

B01 POST - W4L20856
(x2) 3"x3"x88 3/4" (76x76x2254)

B02 POST - W4L20858
(x2) 3"x3"x88 3/4" (76x76x2254)

B03 POST - W4L20911
(x1) 3"x3"x85 11/16" (76x76x2177)

B04 POST - W4L20912
(x1) 3"x3"x85 11/16" (76x76x2177)

B05 POST - W4L20916
(x1) 3"x3"x88 3/4" (76x76x2254)

B06 POST - W4L20917
(x1) 3"x3"x88 3/4" (76x76x2254)

B07 POST - W4L20920
(x1) 3"x3"x88 3/4" (76x76x2254)

B08 POST - W4L20921
(x1) 3"x3"x88 3/4" (76x76x2254)

B09 POST - W4L20922
(x1) 3"x3"x88 3/4" (76x76x2254)

B10 POST - W4L20925
(x1) 3"x3"x88 3/4" (76x76x2254)

B11 POST - W4L20926
(x1) 3"x3"x88 3/4" (76x76x2254)

B12 POST - W4L20927
(x1) 3"x3"x88 3/4" (76x76x2254)

D01 HEADER - W4L20853
(x2) 1 7/16"x5 1/4"x67 1/2" (36x134x1714)

D02 HEADER - W4L20854
(x1) 1 7/16"x5 1/4"x42 3/8" (36x134x1076)

OWNER'S MANUAL - PARTS IDENTIFICATION

WOOD COMPONENTS (NOT TO SCALE)

D03 GABLE BOARD - W4L20884
(x4) 1 7/16"X5 1/4"X75 15/16" (36x134x1928)

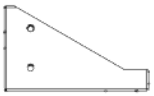

D04 END TRIM - W4L20891
(x6) 1 7/16"x134x227 (36x134x227)

D05 HEADER - W4L20894
(x2) 1 7/16"x5 1/4"x71 5/8" (36x134x1819)

D06 HEADER - W4L20895
(x2) 1 7/16"x5 1/4"x49 3/16" (36x134x1250)

D08 HEADER - W4L20928
(x2) 1 7/16"X5 1/4"X43 5/16" (36x134x1100)

D07 HEADER - W4L20913
(x1) 1 7/16"x5 1/4"x88 13/16" (36x134x2256)

D09 HEADER - W4L20929
(x2) 1 7/16"X5 1/4"X23 11/16" (36x134x602)

D10 GABLE BOARD - W4L20936
(x2) 1 7/16"X5 1/4"X58 13/16" (36x134x1494)

E01 WINDOW SILL - W4L20842
(x2) 1 7/16"x3 3/8"x25 1/4" (36x86x642)

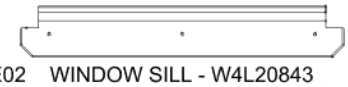

E02 WINDOW SILL - W4L20843
(x4) 1 7/16"x3 3/8"x21 1/2" (36x86x546)

E03 WINDOW SILL - W4L20844
(x2) 1 7/16"x3 3/8"x25 1/4" (36x86x642)

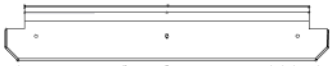

E04 WINDOW SILL - W4L20859
(x2) 1 7/16"x3 3/8"x20" (36x86x508)

E05 WINDOW SILL - W4L20879
(x6) 1 7/16"x3 3/8"x22 3/8" (36x86x569)

E06 RAFTER - W4L20885
(x4) 1 7/16"x3 3/8"x"73 1/8" (36x86x1857)

E07 WINDOW SILL - W4L20930
(x1) 1 7/16"x3 3/8"x23 3/8" (36x86x594)

E08 WINDOW SILL - W4L20931
(x1) 1 7/16"x3 3/8"x23 3/8" (36x86x594)

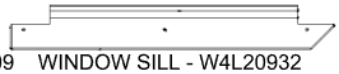

E09 WINDOW SILL - W4L20932
(x1) 1 7/16"x3 3/8"x25 1/16" (36x86x636)

E10 WINDOW SILL - W4L20933
(x1) 1 7/16"x3 3/8"x25 1/16" (36x86x636)

E11 WINDOW SILL - W4L20934
(x1) 1 7/16"x3 3/8"x19 15/16" (36x86x506)

E12 WINDOW SILL - W4L20935
(x1) 1 7/16"x3 3/8"x19 15/16" (36x86x506)

E13 RAFTER - W4L20940
(x8) 1 7/16"x3 3/8"x72" (36x86x1829)

E14 RAFTER - W4L20941
(x2) 1 7/16"x3 3/8"x"56" (36x86x1422)

E15 RAFTER - W4L21252
(x1) 1 7/16"x3 3/8"x66 1/2" (36x86x1690)

E16 RAFTER - W4L21253
(x1) 1 7/16"x3 3/8"x46 5/8" (36x86x1185)

E17 RAFTER - W4L21254
(x1) 1 7/16"x3 3/8"x39" (36x86x991)

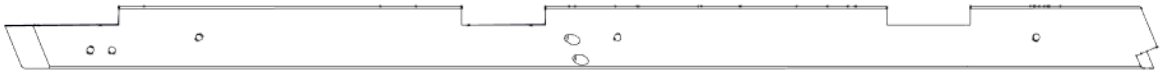

E18 RAFTER - W4L21255
(x1) 1 7/16"x3 3/8"x62 7/8" (36x86x1597)

E19 RAFTER - W4L21256
(x1) 1 7/16"x3 3/8"x21 15/16" (36x86x557)

E20 RAFTER - W4L21257
(x1) 1 7/16"x3 3/8"x61 5/16" (36x86x1558)

OWNER'S MANUAL - PARTS IDENTIFICATION

WOOD COMPONENTS (NOT TO SCALE)

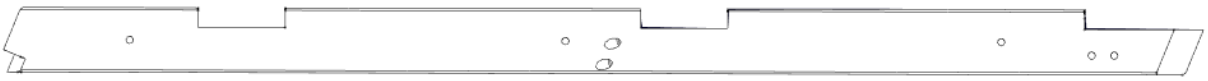

E21 RAFTER - W4L21270
(x1) 1 7/16"x3 3/8"x62 7/8" (36x86x1597)

E22 RAFTER - W4L21271
(x1) 1 7/16"x3 3/8"x39" (36x86x991)

E23 RAFTER - W4L21272
(x1) 1 7/16"x3 3/8"x21 15/16" (36x86x557)

E24 RAFTER - W4L21273
(x1) 1 7/16"x3 3/8"x61 5/16" (36x86x1558)

E25 RAFTER - W4L21274
(x1) 1 7/16"x3 3/8"x46 5/8" (36x86x1185)

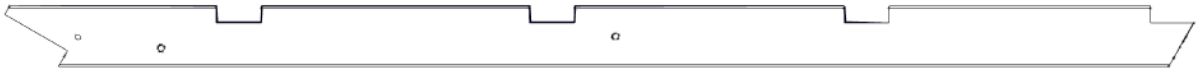

E26 RAFTER - W4L21275
(x1) 1 7/16"x3 3/8"x66 1/2" (36x86x1690)

E27 ACCESSORY TRUSS - W4L21293
(x7) 1 7/16"x3 3/8"x61 1/8" (36x86x1552)

F01 UPRIGHT - W4L20855
(x7) 1 7/16"2 3/8"x86 11/16" (36x60x2202)

F02 UPRIGHT - W4L20857
(x2) 1 7/16"x2 3/8"x86 11/16" (36x60x2202)

F05 WINDOW FRAME - W4L20864
(x2) 1 7/16"x2 3/8"x19 15/16" (36x60x507)

F06 WINDOW FRAME - W4L20866
(x2) 1 7/16"x2 3/8"x19 15/16" (36x60x507)

F07 UPRIGHT - W4L20871
(x2) 1 7/16"x2 3/8"x85 11/16" (36x60x2177)

F08 UPRIGHT - W4L20874
(x2) 1 7/16"x2 3/8"x85 11/16" (36x60x2177)

F09 UPRIGHT - W4L20875
(x2) 1 7/16"x2 3/8"x85 11/16" (36x60x2177)

F10 UPRIGHT - W4L20876
(x2) 1 7/16"x2 3/8"x85 11/16" (36x60x2177)

F11 WINDOW FRAME - W4L21286
(x1) 1 7/16"x2 3/8"x20 15/16" (36x60x532)

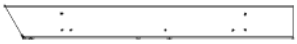

F12 WINDOW FRAME - W4L21287
(x1) 1 7/16"x2 3/8"x20 15/16" (36x60x532)

F13 WINDOW FRAME - W4L21288
(x1) 1 7/16"x2 3/8"x10 9/16" (36x60x268)

F14 WINDOW FRAME - W4L21289
(x1) 1 7/16"x2 3/8"x10 9/16" (36x60x268)

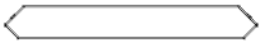

F15 ANGLE BRACE - W4L21301
(x14) 1 7/16"x2 3/8"x18 1/16" (36x60x458)

F16 ANGLE BRACE - W4L21302
(x4) 1 7/16"x2 3/8"x18 1/16" (36x60x458)

F17 TABLE SPLICE - W4L21306
(x1) 1 7/16"x2 3/8"x13 1/4" (36x60x336)

F18 ANGLE BRACE - W4L21307
(x1) 1 7/16"x2 3/8"x17" (36x60x432)

OWNER'S MANUAL - PARTS IDENTIFICATION

WOOD COMPONENTS (NOT TO SCALE)

G01 BASE BOARD - W4L20849
(x1) 15/16"x5 1/4"x42 3/8" (24x134x1076)

G02 BASE BOARD - W4L20850
(x2) 15/16"x5 1/4"x68 7/16" (24x134x1738)

G03 BASE BOARD - W4L20872
(x2) 15/16"X5 1/4"X70 3/16" (24x134x1783)

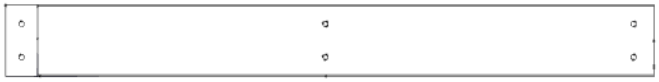

G04 BASE BOARD - W4L20873
(x2) 15/16"X5 1/4"X47 13/16" (24x134x1214)

G05 BASE BOARD - W4L20914
(x2) 15/16"X5 1/4"X25 7/16" (24x134x646)

G06 BASE BOARD - W4L20918
(x2) 15/16"X5 1/4"X24 3/16" (24x134x614)

G07 BASE BOARD - W4L20924
(x2) 15/16"X5 1/4"X44 1/4" (24x134x1124)

H01 SHELF BOARD - W4L20848
(x2) 15/16"x3 3/8"x75 3/4" (24x86x1924)

H02 RUNNING BOARD - W4L20851
(x2) 15/16"x3 3/8"x68 7/16" (24x86x1738)

H03 RUNNING BOARD - W4L20852
(x1) 15/16"x3 3/8"x42 3/8" (24x86x1076)

H05 RUNNING BOARD - W4L20878
(x2) 15/16"x3 3/8"x47 13/16" (24x86x1214)

H04 RUNNING BOARD - W4L20877
(x2) 15/16"x3 3/8"x70 3/16" (24x86x1783)

H06 RUNNING BOARD - W4L20915
(x2) 15/16"X3 3/8"X25 7/16" (24x86x646)

H07 RUNNING BOARD - W4L20919
(x2) 15/16"X3 3/8"X24 3/16" (24x86x614)

H08 RUNNING BOARD - W4L20923
(x2) 15/16"X3 3/8"X44 1/4" (24x86x1124)

H09 SHELF BOARD - W4L21314
(x2) 15/16"x3 3/8"x55 3/4" (24x86x1416)

H10 SHELF BOARD - W4L21316
(x4) 15/16"x3 3/8"x70 13/16" (24x86x1799)

J02 PURLIN - W4L21243
(x3) 24x2 3/8"x68 3/8" (24x60x1737)

J01 PURLIN - W4L21242
(x1) 15/16"x2 3/8"x86 9/16" (24x60x2199)

J03 PURLIN - W4L21244
(x3) 24x2 3/8"x46 7/8" (24x60x1191)

J06 PURLIN - W4L21247
(x1) 15/16"x2 3/8"x46 7/8" (24x60x1191)

J04 PURLIN - W4L21245
(x3) 15/16"x2 3/8"x62 15/16" (24x60x1598)

J05 PURLIN - W4L21246
(x1) 15/16"x2 3/8"x68 3/8" (24x60x1737)

OWNER'S MANUAL - PARTS IDENTIFICATION

WOOD COMPONENTS (NOT TO SCALE)

J07 PURLIN - W4L21248
(x1) 15/16"x2 3/8"x62 15/16" (24x60x1598)

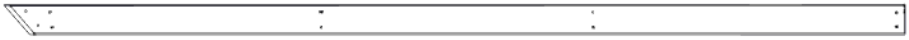

J08 PURLIN - W4L21258
(x1) 15/16"x2 3/8"x71 5/16" (24x60x1812)

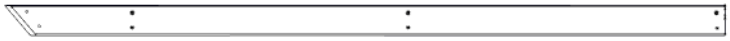

J09 PURLIN - W4L21259
(x1) 15/16"x2 3/8"x56 1/8" (24x60x1426)

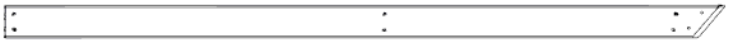

J11 PURLIN - W4L21262
(x1) 15/16"x2 3/8"x53 1/8" (24x60x1350)

J10 PURLIN - W4L21260
(x1) 15/16"x2 3/8"x68 3/8" (24x60x1737)

J12 PURLIN - W4L21263
(x1) 15/16"x2 3/8"x37 15/16" (24x60x964)

J13 PURLIN - W4L21264
(x1) 15/16"x2 3/8"x86 9/16" (24x60x2199)

J14 PURLIN - W4L21265
(x1) 15/16"x2 3/8"x71 5/16" (24x60x1812)

J15 PURLIN - W4L21266
(x1) 15/16"x2 3/8"x56 1/8" (24x60x1426)

J17 PURLIN - W4L21268
(x1) 15/16"x2 3/8"x53 1/8" (24x60x1350)

J16 PURLIN - W4L21267
(x1) 15/16"x2 3/8"x68 3/8" (24x60x1737)

J18 PURLIN - W4L21269
(x1) 15/16"x2 3/8"x37 15/16" (24x60x964)

J19 RIDGE CAP STIFFENER - W4L21277
(x2) 15/16"x2 3/8"x59 1/16" (24x60x1500)

J20 RIDGE CAP STIFFENER - W4L21278
(x4) 15/16"x2 3/8"x57 15/16" (24x60x1471)

J21 RIDGE CAP STIFFENER - W4L21279
(x2) 15/16"x2 3/8"x64 5/16" (24x60x1634)

J22 PURLIN - W4L21641
(x2) 15/16"x2 3/8"x88 11/16" (24x60x2252)

K01 PEAK TRIM - W4L20896
(x3) 5/8"x5 1/4"x16 9/16" (16x134x420)

M01 COVER BOARD - W4L20846
(x25) 5/8"x3 3/8"x24 3/16" (16x86x614)

M02 FAN TRIM - W4L20897
(x2) 5/8"x3"x24 1/16" (16x76x611)

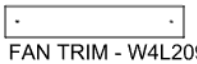

M03 FAN TRIM - W4L20900
(x1) 5/8"x3"x16 9/16" (16x76x420)

M04 FAN TRIM - W4L20909
(x1) 5/8"c3 1/8"c10 1/2" (16x80x266)

M05 WINDOW TRIM - W4L20910
(x2) 5/8"x3 3/8"x25 3/8" (16x86x644)

M06 TABLE TRIM - W4L21303
(x2) 5/8"x3 3/8"x48 1/8" (16x86x1223)

M07 TABLE TRIM - W4L21310
(x1) 5/8"x3 3/8"x68 3/4" (16x86x1746)

M08 TABLE TRIM - W4L21311
(x1) 5/8"x3 3/8"x64 1/2" (16x86x1639)

M09 TABLE TRIM - W4L21313
(x2) 5/8"x3 3/8"x48" (16x86x1219)

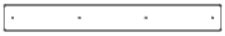

N01 WINDOW TRIM - W4L20865
(x4) 5/8"x2 3/8"x19 5/16" (16x60x491)

N02 SLAT - W4L20882
(x22) 5/8"x2 3/8"x24 3/4" (16x60x629)

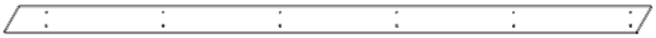

N03 WINDOW TRIM - W4L20887
(x4) 5/8"x2 3/8"x55 11/16" (16x60x1414)

N04 WINDOW TRIM - W4L20892
(x4) 5/8"x2 3/8"x54 3/4" (16x60x1390)

N06 FAN TRIM - W4L20898
(x2) 5/8"x2 3/8"x25 3/8" (16x60x644)

N08 WINDOW TRIM - W4L21290
(x2) 5/8"x2 3/8"x40 1/16" (16x60x1018)

N09 WINDOW TRIM - W4L21291
(x2) 5/8"x2 3/8"x17 9/16" (16x60x446)

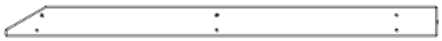

N10 WINDOW TRIM - W4L21292
(x2) 5/8"x2 3/8"x33 1/2" (16x60x851)

N11 TABLE TOP SPLICE - W4L21304
(x2) 5/8"x2 3/8"x16 1/16" (16x60x408)

N12 TABLE TOP SPLICE - W4L21312
(x2) 5/8"x2 3/8"x20 1/4" (16x60x515)

OWNER'S MANUAL - PARTS IDENTIFICATION

WOOD COMPONENTS (NOT TO SCALE)

N13 SHELF SPACER - W4L21315
(x4) 5/8"x2 3/8"x6 5/16" (16x60x160)

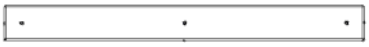

N14 COVER BOARD - W4L21462
(x2) 5/8"x2 3/8"x25" (16x60x614)

O01 LATCH BLOCK - W4L20883
(x4) 1 5/16"x5/8"x4 3/4" (16x34x120)

O03 DOOR STOP - W4L21285
(x2) 5/8"x1 5/16"x80 5/16" (16x34x2040)

P01 WINDOW CAP - W4L20845
(x10) 1 7/16"x1 7/16"x19 1/16" (36x36x484)

P02 WINDOW CAP - W4L20860
(x2) 1 7/16"x1 7/16"x17 9/16" (36x36x446)

P03 WINDOW CAP - W4L20880
(x6) 1 7/16"x1 7/16"x19 15/16" (36x36x507)

P04 WINDOW CAP - W4L20942
(x2) 1 7/16"x1 7/16"x15 3/4" (36x36x400)

P05 WINDOW CAP - W4L20943
(x2) 1 7/16"x1 7/16"x18 7/16" (36x36x468)

P08 TABLE CLEAT - W4L21296
(x1) 1 7/16"x1 7/16"x22 3/8" (36x36x569)

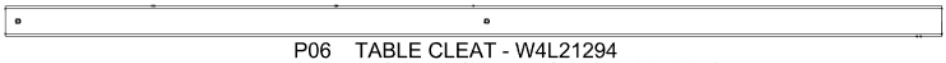

P06 TABLE CLEAT - W4L21294
(x2) 1 7/16"x1 7/16"x43 9/16" (36x36x1107)

P07 TABLE CLEAT SPLICE - W4L21295
(x3) 1 7/16"x1 7/16"x6" (36x36x152)

P09 TABLE CLEAT - W4L21305
(x2) 1 7/16"x1 7/16"x65 1/4" (36x36x1658)

P10 TABLE CLEAT - W4L21308
(x2) 1 7/16"x1 7/16"x43 9/16" (36x36x1107)

P11 TABLE CLEAT - W4L21309
(x1) 1 7/16"x1 7/16"x22 3/8" (36x36x569)

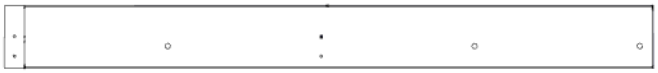

Q01 RIDGE BOARD - W4L20937
(x2) 15/16"x4 7/16"x45 7/16" (24x112x1154)

Q04 RIDGE BOARD - W4L20944
(x1) 15/16"x4 7/16"x27 1/4" (24x112x692)

Q02 RIDGE BOARD - W4L21463
(x1) 15/16"x4 7/16"x71 15/16" (24x112x1827)

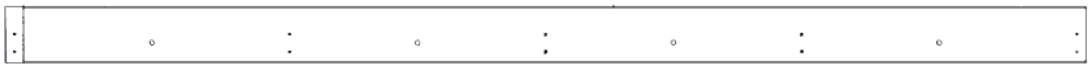

Q03 RIDGE BOARD - W4L20939
(x1) 15/16"x4 7/16"x84 7/16" (24x112x2144)

Q07 RIDGE BOARD - W4L21241
(x1) 15/16"x4 7/16"x12 5/16" (24x112x312)

Q05 RIDGE BOARD - W4L20945
(x1) 15/16"x4 7/16"x71 5/8" (24x112x1820)

Q06 RIDGE BOARD - W4L20946
(x1) 15/16"x4 7/16"x86 5/8" (24x112x2200)

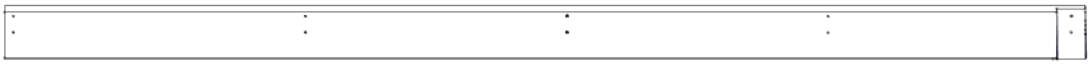

Q08 FASCIA - W4L21249
(x1) 15/16"x4 7/16"x88 7/8" (24x112x2258)

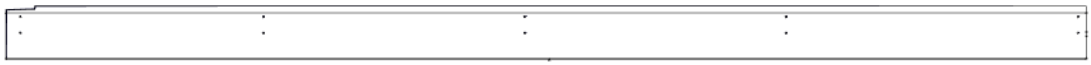

Q09 FASCIA - W4L21250
(x1) 15/16"x4 7/16"x88 7/8" (24x112x2258)

Q10 FASCIA - W4L21280
(x1) 15/16"x4 7/16"x43 5/16" (24x112x1100)

Q11 FASCIA - W4L21281
(x1) 15/16"x4 7/16"x20 7/8" (24x112x531)

Q12 FASCIA - W4L21282
(x1) 15/16"x4 7/16"x43 5/16" (24x112x1100)

Q13 FASCIA - W4L21283
(x1) 15/16"x4 7/16"x20 7/8" (24x112x531)

Q14 RIDGE BOARD - W4L21464
(x1) 15/16"x4 7/16"x70 1/2" (24x112x1791)

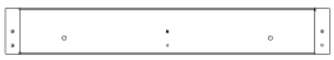

Q15 RIDGE BOARD - W4L21465
(x1) 15/16"x4 7/16"x31 7/16" (24x112x798)

W01 RAFTER - W4L21251
(x1) 1 15/16"x3 3/8"x72" (50x86x1829)

W02 RAFTER - W4L21276
(x1) 1 15/16"x3 3/8"x16" (50x86x407)

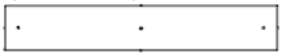

Y01 COVER BOARD - W4L20847
(x8) 5/8"x4"x24 3/16" (16x102x614)

OWNER'S MANUAL - PARTS IDENTIFICATION

WOOD COMPONENTS (NOT TO SCALE)

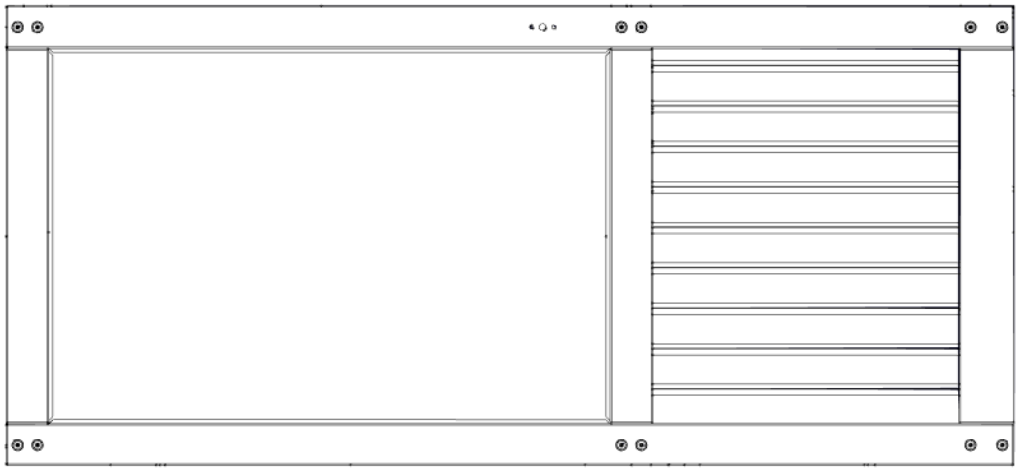

DA01 DOOR ASSEMBLY - W2A04009
(x1) 1 7/8"x36 9/16"x80" (48x928x2032)

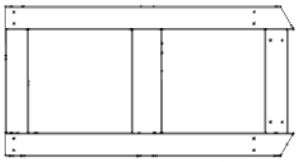

FF01 FAN FRAME - W2A04525
(x1) 1 7/16"x15 1/4"x29 7/16" (36x388x748)

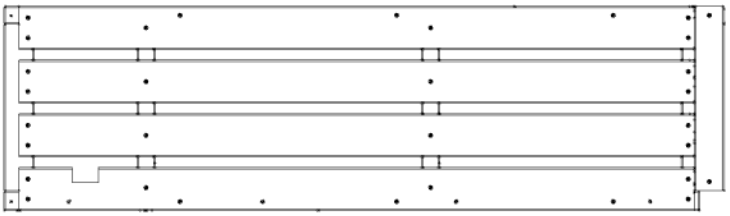

TB01 TABLE ASSEMBLY - W2A04532
(x1) 2 1/16"x16 1/16"x56 11/16" (52x408x1440)

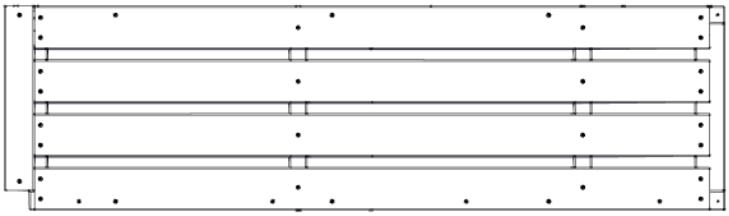

TB02 TABLE ASSEMBLY - W2A04533
(x1) 2 1/16"x16 1/16"x56 11/16" (52x408x1440)

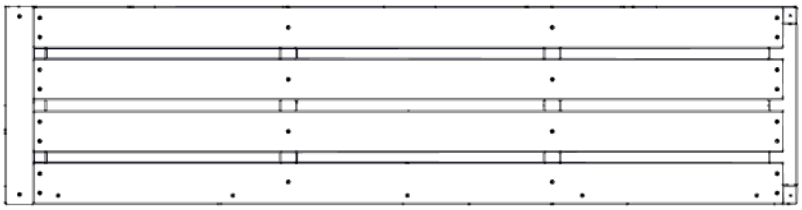

TB03 TABLE ASSEMBLY - W2A04534
(x1) 2 1/16"x16 1/16"x64 1/2" (52x408x1639)

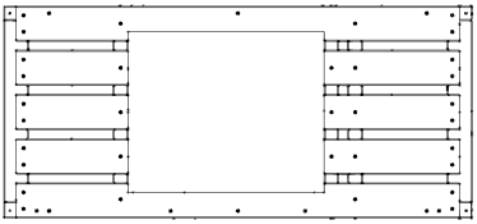

TB05 TABLE ASSEMBLY - W2A04536
(x1) 2 1/16"x20 1/4"x44 3/4" (52x515x1136)

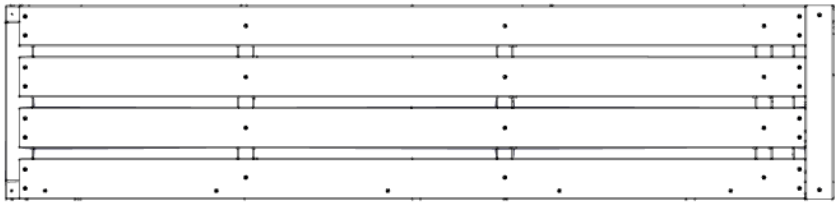

TB04 TABLE ASSEMBLY - W2A04535
(x1) 2 1/16"x16 1/16"x68 3/4" (52x408x1746)

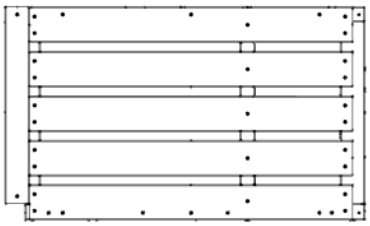

TB06 TABLE ASSEMBLY - W2A04537
(x1) 2 1/16"x20 1/4"x34 5/16" (52x515x871)

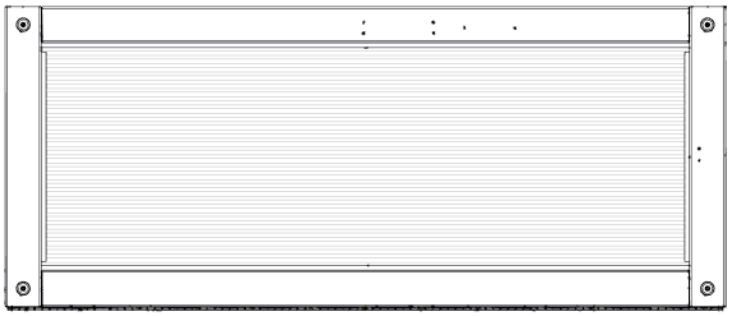

WA01 WINDOW ASSEMBLY - W2A04518
(x2) 1 7/8"x19 5/8"x47 3/16" (48x498x1198)

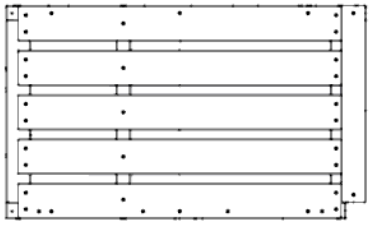

TB07 TABLE ASSEMBLY - W2A04538
(x1) 2 1/16"x20 1/4"x34 5/16" (52x515x871)

OWNER'S MANUAL - PARTS IDENTIFICATION

WOOD COMPONENTS (NOT TO SCALE)

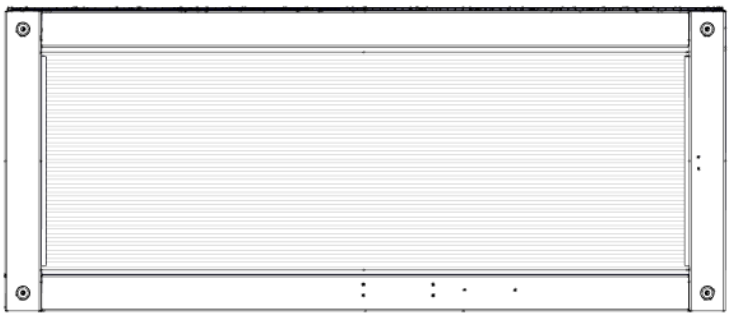

WA02 WINDOW ASSEMBLY - W2A04519
(x2) 1 7/8"x19 5/8"x47 3/16" (48x498x1198)

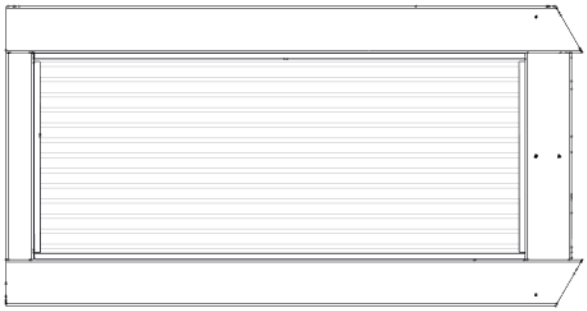

WA05 WINDOW ASSEMBLY - W2A04526
(x1) 1 7/16"x15 1/4"x29 7/16" (36x388x747)

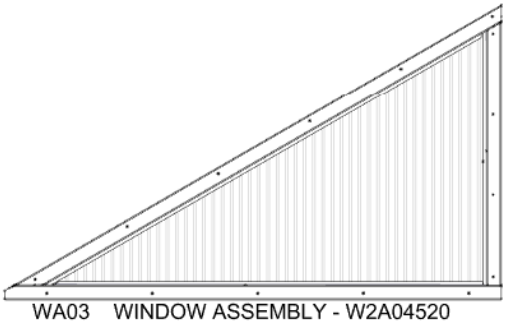

WA03 WINDOW ASSEMBLY - W2A04520
(x2) 1 7/16"x28 1/16"x47 1/16" (36x713x1196)

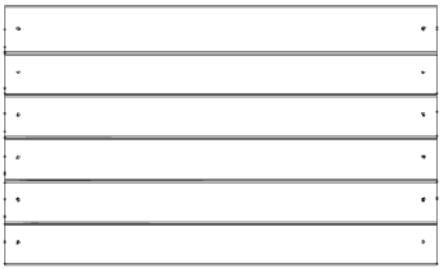

WP01 WALL PANEL - W2A04513
(x10) 1 1/16"x19 1/16"x31 9/16" (27x484x802)

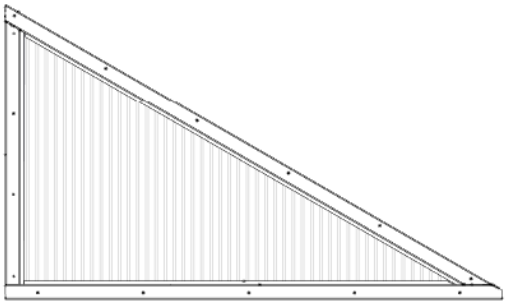

WA04 WINDOW ASSEMBLY - W2A04522
(x2) 1 7/16"x28 1/16"x47 1/16" (36x713x1196)

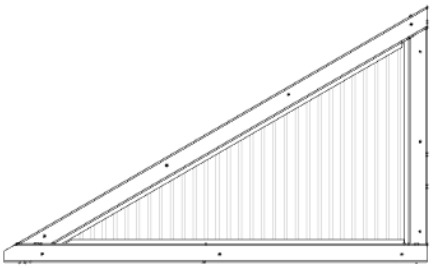

WA06 WINDOW ASSEMBLY - W2A04530
(x1) 1 7/16"x19 9/16"x32 5/16" (36x496x821)

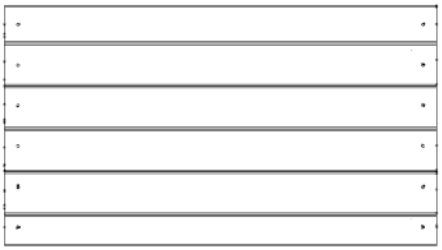

WP02 WALL PANEL - W2A04514
(x2) 1 1/16"x17 9/16"x31 9/16" (27x446x802)

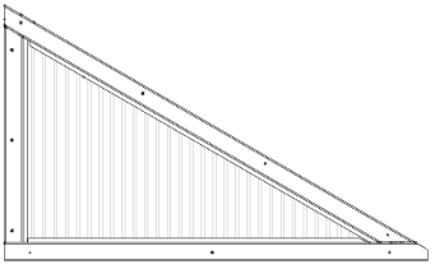

WA07 WINDOW ASSEMBLY - W2A04531
(x1) 1 7/16"x19 9/16"x32 5/16" (36x496x821)

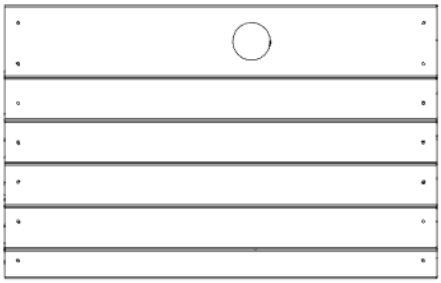

WP03 WALL PANEL - W2A04515
(x1) 1 1/16"x19 15/16"x31 9/16" (27x507x802)

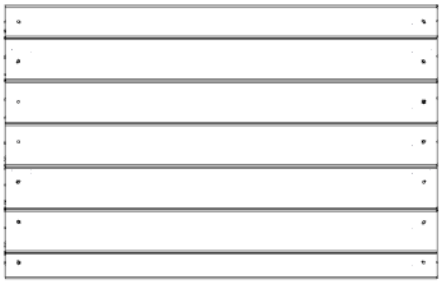

WP04 WALL PANEL - W2A04516
(x6) 1 1/16"x19 15/16"x31 9/16" (27x507x802)

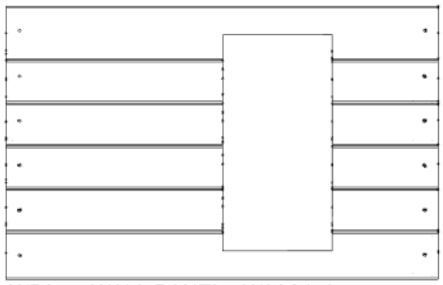

WP05 WALL PANEL - W2A04527
(x2) 1 1/16"x19 15/16"x31 9/16" (27x507x802)

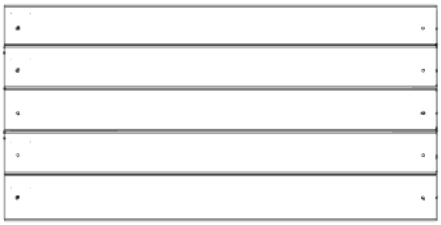

WP06 WALL PANEL - W2A04528
(x2) 1 1/16"x15 3/4"x31 9/16" (27x400x802)

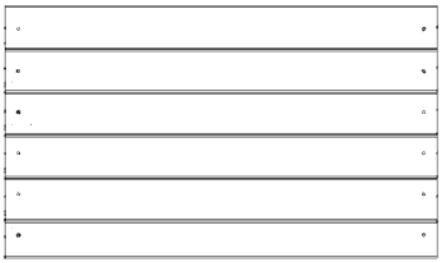

WP07 WALL PANEL - W2A04529
(x2) 1 1/16"x18 3/8"x31 9/16" (27x468x802)

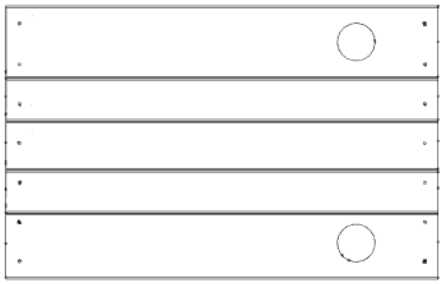

WP08 WALL PANEL - W2A04539
(x1) 13 1/4"x19 15/16"x31 9/16" (337x507x802)

OWNER'S MANUAL - PARTS IDENTIFICATION

ACCESSORY COMPONENTS (NOT TO SCALE)

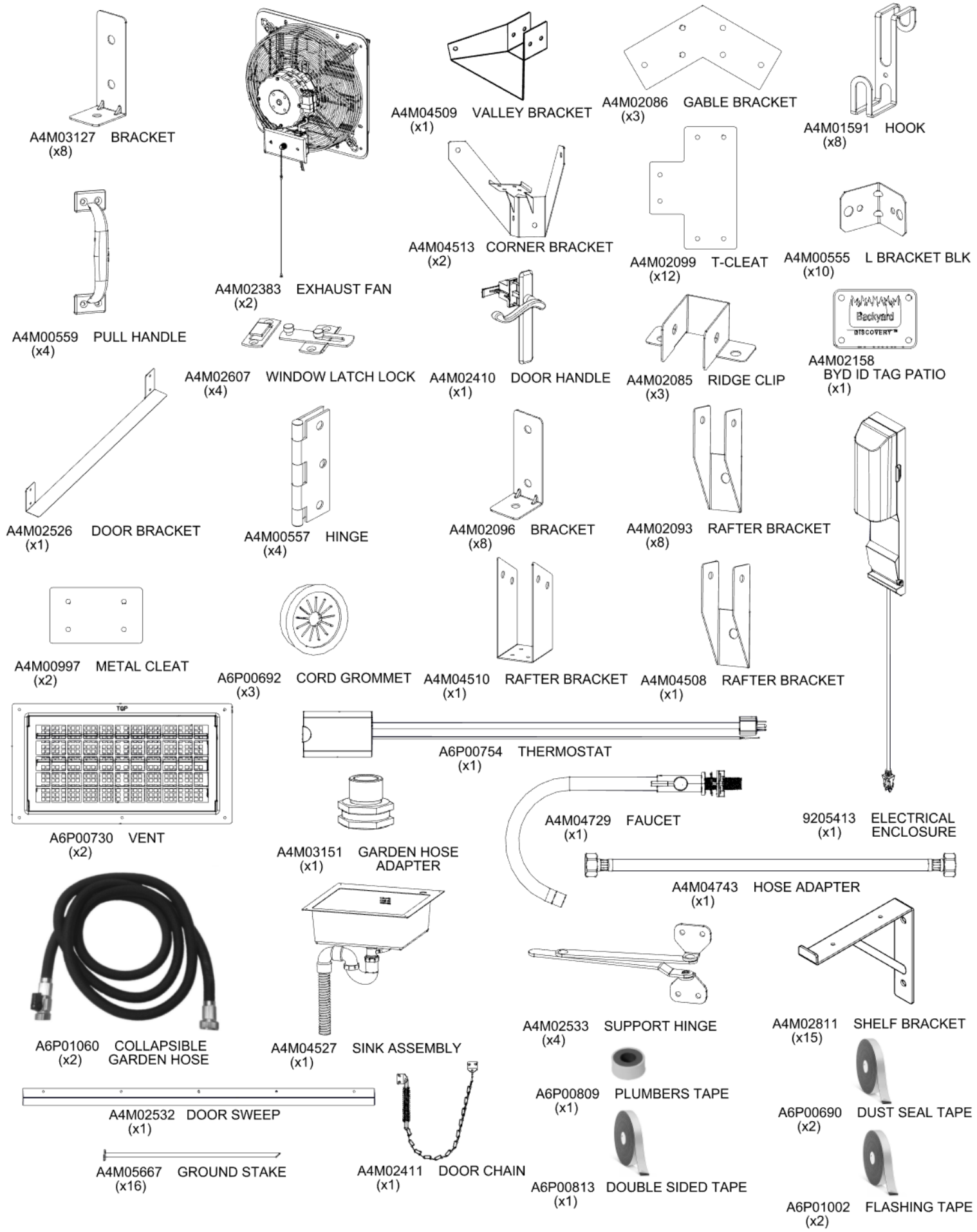

OWNER'S MANUAL - PARTS IDENTIFICATION

ACCESSORY COMPONENTS (NOT TO SCALE)

A6P00872 POLY CHANNEL
(x44)

A6P00895 POLY CHANNEL
(x2)

A6P01176 POLY CHANNEL
(x20)

A6P01178 POLY CHANNEL
(x4)

A6P01184 POLY CHANNEL
(x26)

A6P01203 POLY CHANNEL
(x4)

A6P01205 POLY CHANNEL
(x8)

A6P01215 POLY CHANNEL
(x8)

A6P01216 POLY CHANNEL
(x4)

A6P01390 POLY CHANNEL
(x2)

A6P01403 POLY CHANNEL
(x2)

A6P01412 POLY CHANNEL
(x2)

A6P01411 POLY CHANNEL
(x2)

A6P01409 POLY CHANNEL
(x2)

A6P01408 POLY CHANNEL
(x1)

A6P01410 POLY CHANNEL
(x2)

A4M04511 SPLICE COVER
(x9)

A4M04515 SPLICE COVER
(x1)

A4M04517 SPLICE COVER
(x1)

A4M04518 SPLICE COVER
(x1)

A4M04519 SPLICE COVER
(x1)

A4M04520 SPLICE COVER
(x1)

A4M04521 SPLICE COVER
(x1)

A4M04522 SPLICE COVER
(x1)

A4M04523 SPLICE COVER
(x1)

A6P01220 POLY SPLICE
(x1)

A6P01211 POLY SPLICE
(x9)

A6P01219 POLY SPLICE
(x1)

A6P01222 POLY SPLICE
(x1)

A6P01223 POLY SPLICE
(x1)

A6P01394 POLY SPLICE
(x1)

A6P01397 POLY SPLICE
(x1)

A6P01398 POLY SPLICE
(x1)

A6P01399 POLY SPLICE
(x1)

OWNER'S MANUAL - PARTS IDENTIFICATION

ACCESSORY COMPONENTS (NOT TO SCALE)

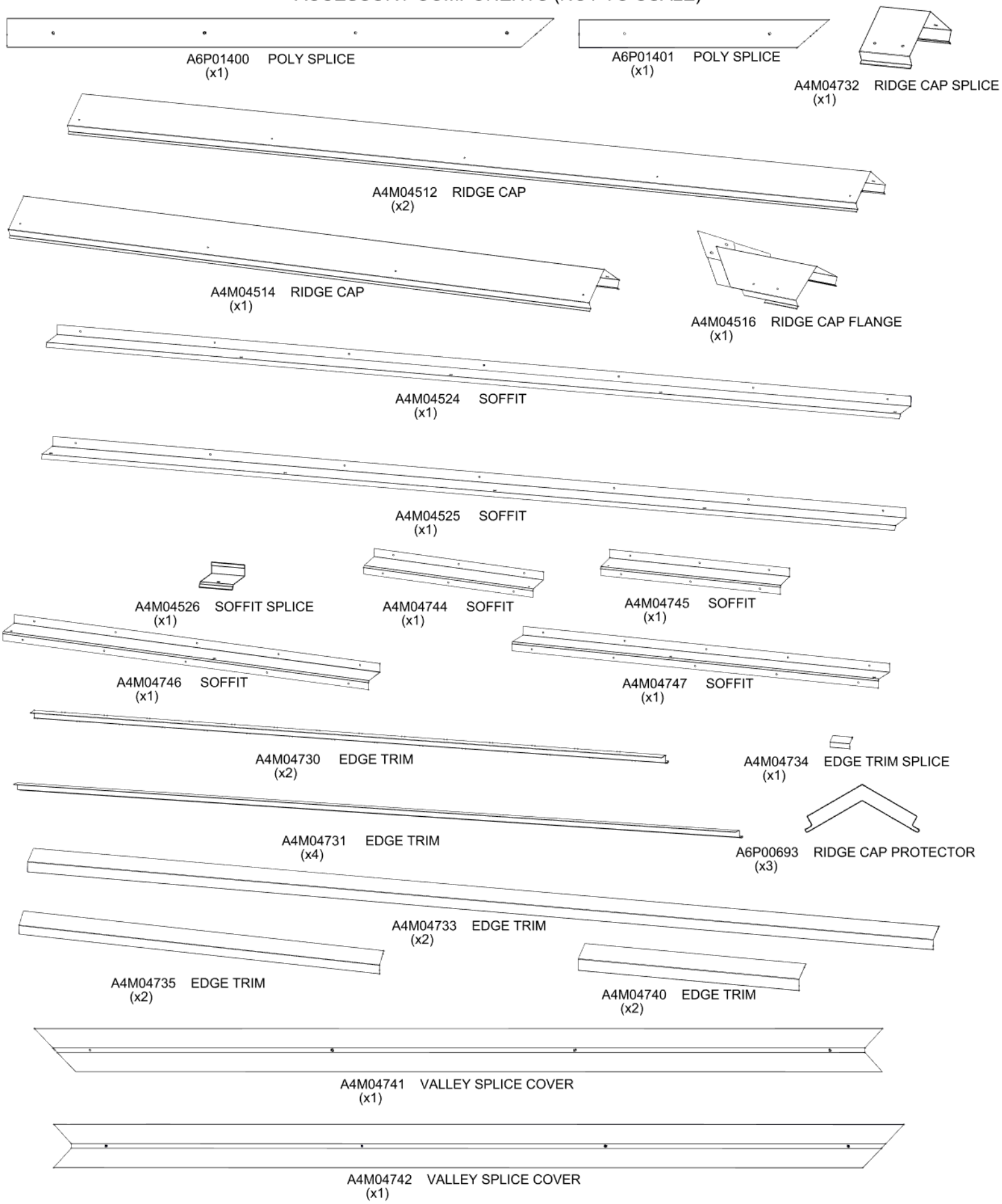

OWNER'S MANUAL - PARTS IDENTIFICATION

ACCESSORY COMPONENTS (NOT TO SCALE)

A6P01175 POLY SHEET
(x10)

A6P01177 POLY SHEET
(x2)

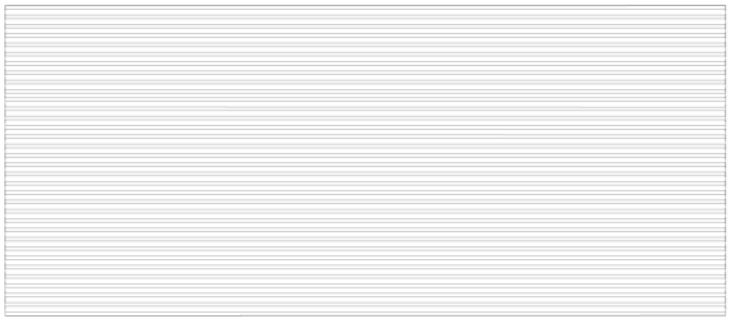

A6P01183 POLY SHEET
(x6)

A6P01202 POLY SHEET
(x2)

A6P01204 POLY SHEET
(x2)

A6P01218 POLY SHEET
(x1)

A6P01212 POLY SHEET
(x4)

A6P01213 POLY SHEET
(x2)

OWNER'S MANUAL - PARTS IDENTIFICATION

ACCESSORY COMPONENTS (NOT TO SCALE)

A6P01214 POLY SHEET
(x4)

A6P01217 POLY SHEET
(x1)

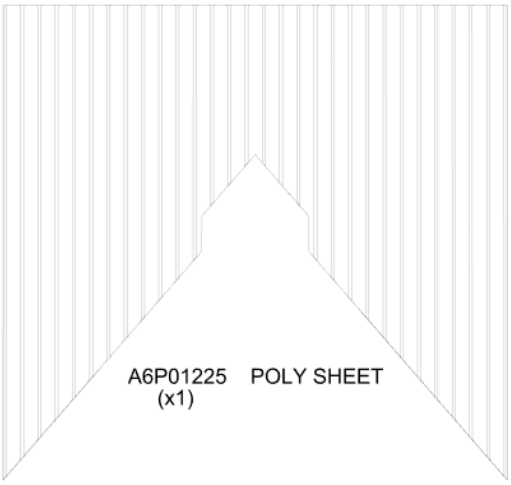

A6P01225 POLY SHEET
(x1)

A6P01224 POLY SHEET
(x1)

A6P01387 POLY SHEET
(x1)

A6P01388 POLY SHEET
(x1)

OWNER'S MANUAL - PARTS IDENTIFICATION

ACCESSORY COMPONENTS (NOT TO SCALE)

A6P01391 POLY SHEET
(x1)

A6P01392 POLY SHEET
(x1)

A6P01393 POLY SHEET
(x1)

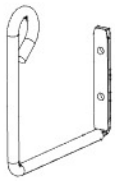

A4M03473 HOSE HANGER
(x1)

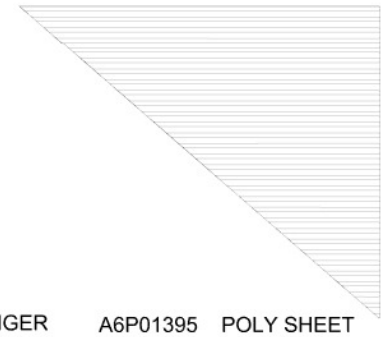

A6P01395 POLY SHEET
(x1)

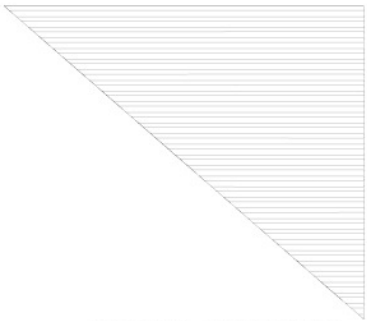

A6P01396 POLY SHEET
(x1)

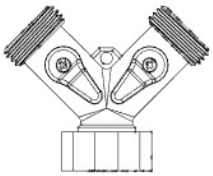

A4M05927 HOSE SPLITTER
(x1)

A6P01402 POLY SHEET
(x1)

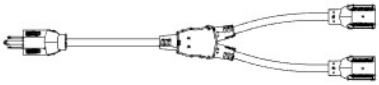

A6P01160 CORD SPLITTER
(x1)

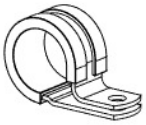

A4M05928 CABLE CLAMP
(x3)

A6P01531 10 OZ SILICONE TUBE
(x2)

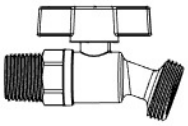

A4M02384 HOSE FAUCET
(x1)

A4M02385 PIPE CLAMP
(x5)

H101464 CAULK GUN
(x1)

A6P00649 THREADED PIPE CONNECTOR
(x1)

A6P00646 ELBOW 1/2" NPT
(x2)

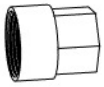

A6P00648 THREADED HOSE FITTING
(x1)

A6P00645 PIPE 1/2" SCH40 X 24"
(x1)

OWNER'S MANUAL - PARTS IDENTIFICATION

Hardware Components

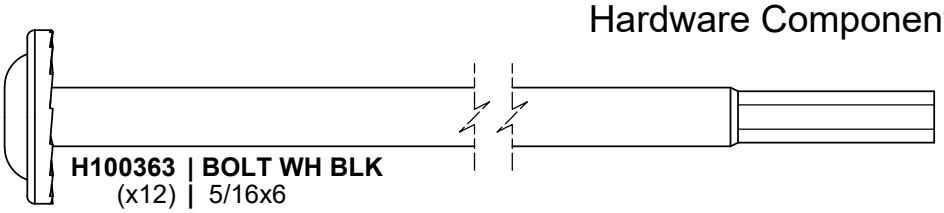

H100363 | BOLT WH BLK
(x12) | 5/16x6

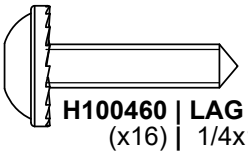

H100460 | LAG SCREW WH BLK
(x16) | 1/4x1

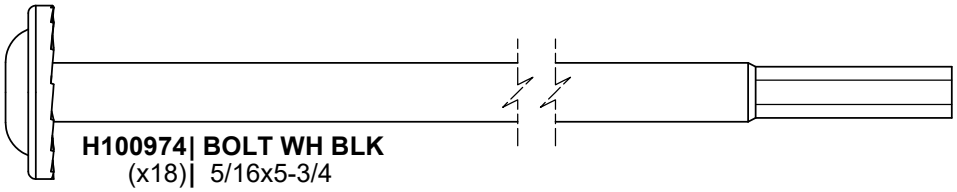

H100974 | BOLT WH BLK
(x18) | 5/16x5-3/4

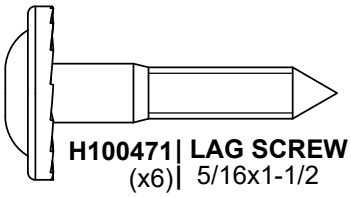

H100471 | LAG SCREW WH BLK
(x6) | 5/16x1-1/2

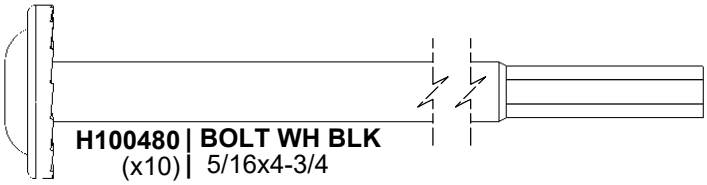

H100480 | BOLT WH BLK
(x10) | 5/16x4-3/4

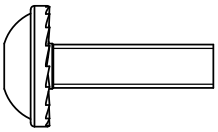

H101139 | BOLT WH BLK
(x4) | 1/4x7/8

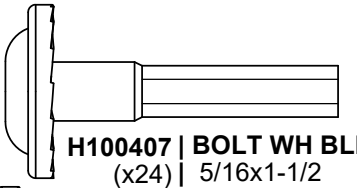

H100407 | BOLT WH BLK
(x24) | 5/16x1-1/2

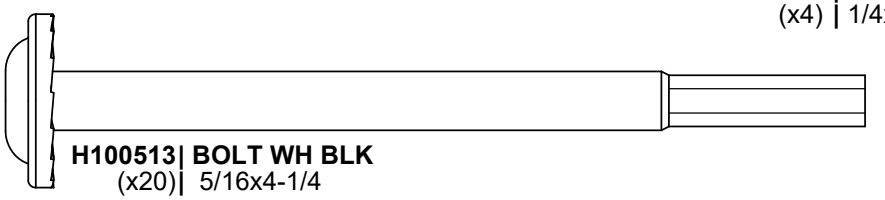

H100513 | BOLT WH BLK
(x20) | 5/16x4-1/4

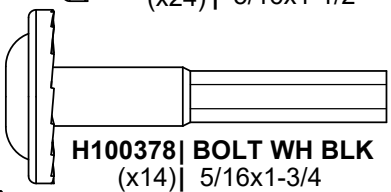

H100378 | BOLT WH BLK
(x14) | 5/16x1-3/4

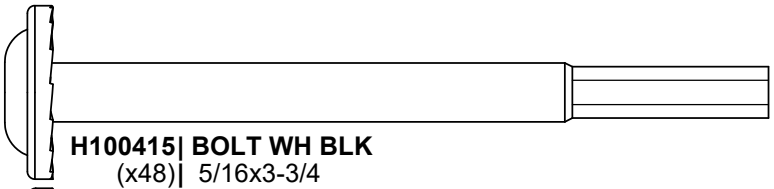

H100415 | BOLT WH BLK
(x48) | 5/16x3-3/4

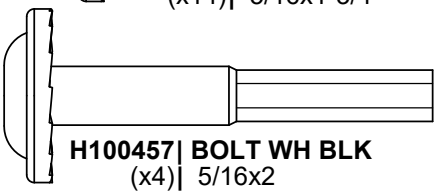

H100457 | BOLT WH BLK
(x4) | 5/16x2

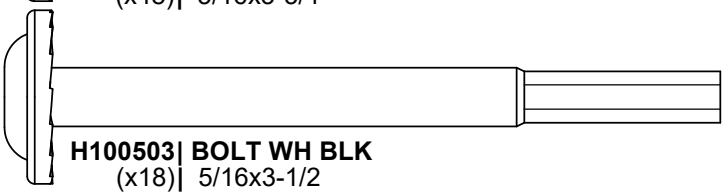

H100503 | BOLT WH BLK
(x18) | 5/16x3-1/2

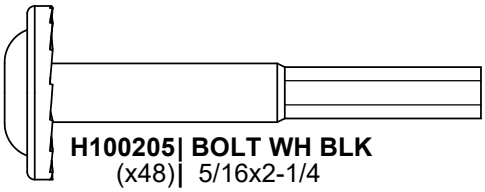

H100205 | BOLT WH BLK
(x48) | 5/16x2-1/4

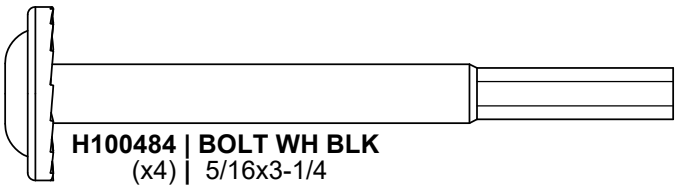

H100484 | BOLT WH BLK
(x4) | 5/16x3-1/4

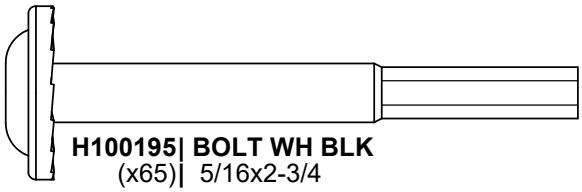

H100195 | BOLT WH BLK
(x65) | 5/16x2-3/4

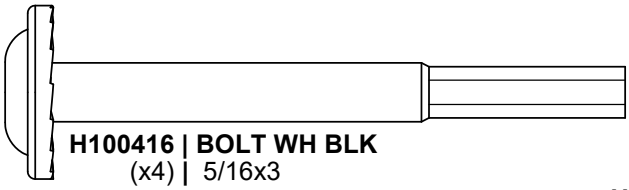

H100416 | BOLT WH BLK
(x4) | 5/16x3

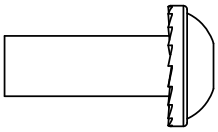

H100399 | NUT BARREL WH BLK
(x30) | 1/4x7/8

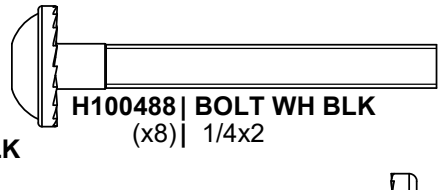

H100488 | BOLT WH BLK
(x8) | 1/4x2

H100999 | BOT WH BLK
(x1) | 1/4x2-1/2

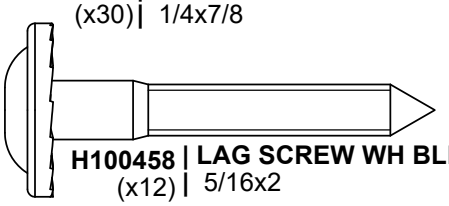

H100458 | LAG SCREW WH BLK
(x12) | 5/16x2

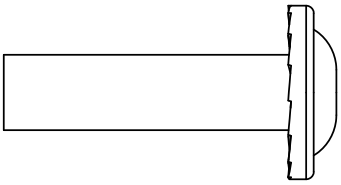

H100193 | NUT BARREL WH BLK
(x32) | 5/16x1-1/2

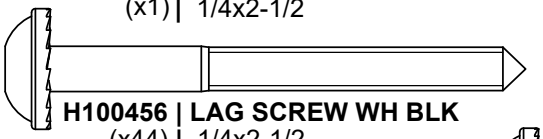

H100456 | LAG SCREW WH BLK
(x44) | 1/4x2-1/2

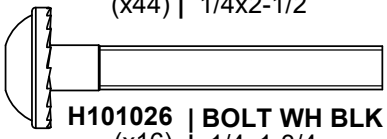

H101026 | BOLT WH BLK
(x16) | 1/4x1-3/4

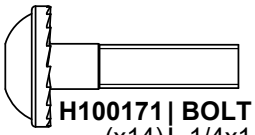

H100171 | BOLT WH BLK
(x14) | 1/4x1

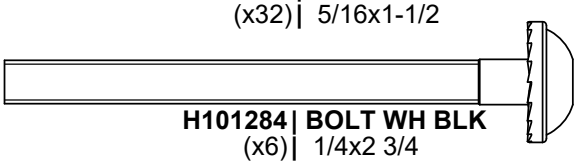

H101284 | BOLT WH BLK
(x6) | 1/4x2 3/4

OWNER'S MANUAL - PARTS IDENTIFICATION

Hardware Components

H100411 | SCREW PFH BLK
(x6) | 8x5/8

H100624 | SCREW PFH BLK
(x8) | **6x5/8**

H100395 | SCREW PFH BLK
(x61) | 8x3/4

H100385 | SCREW PFH BLK
(x117) | 8x1

H100380 | SCREW PFH BLK
(x30) | 8x1-1/8

H100387 | SCREW PFH BLK
(x16) | 8x1-1/4

H100200 | SCREW PFH BLK
(x289) | 8x1-1/2

H100382 | SCREW PFH BLK
(x492) | 8x1-3/4

H100391 | SCREW PFH BLK
(x372) | 8x2

H100483 | SCREW PFH BLK
(x56) | 8x2-1/4

H100201 | SCREW PFH BLK
(x109) | 8x2-1/2

H101191 | SCREW PFH BLK
(x52) | 6x1

H100362 | SCREW PFH BLK
(x30) | 8x3

H101109 | SCREW PFH BLK
(x4) | 8x3-1/2

H100777 | SCREW PFH BLK
(x6) | 10x 3-1/2

H100202 | SCREW PWH BLK
(x9) | 8x5/8

H100392 | SCREW PWH BLK
(x46) | 8x3/4

H101069 | SCREW PWH BLK
(x8) | 8x7/8

H100536 | SCREW PWH BLK
(x2) | 8x1-1/4

H100797 | SCREW PWH BLK
(x16) | 8x1

H100627 | SCREW PFH BLK
(x8) | 6x3/4

H101205 | SCREW PWH BLK
(x8) | 8x3/4

H101207 | SCREW PWH BLK
(x16) | 8x7/8

H101206 | SCREW WOODGRIP 10-16x1-1/4"
(x27)

H100398 | T-NUT BLK
(x10) | 1/4

H100379 | T-NUT BLK
(x232) | 5/16

H100479 | NUT LOCK BLK
(x25) | 5/16

H101469 | SCREW PWH BLK
(x84) | 8X1 1/2

H101117 | SCREW WOODGRIP
(x52) | 10x3/4

H101165 | CONCRETE ANCHOR 3/8"x3" BLK
(x16) | 3/8x3

H100405 | WASHER LOCK EXT BLK
(x54) | 6x15

H100400 | WASHER LOCK EXT BLK
(x30) | 8x15

H100198 | WASHER LOCK EXT BLK
(x263) | 8x19

H100653 | NUT LOCK BLK
(x9) | 1/4

H100630 | WASHER FLAT BLK
(x9) | 8x19

H100770 | WASHER FLAT BLK
(x8) | 5/16"

H100478 | WASHER FLAT BLK
(x17) | 8x27

OWNER'S MANUAL - PARTS IDENTIFICATION

Hardware Components

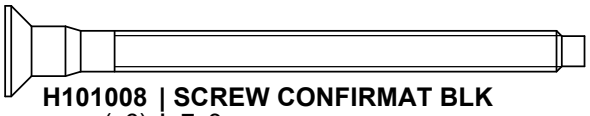

H101008 | SCREW CONFIRMAT BLK
(x6) | 7x3

H101009 | SCREW CONFIRMAT BLK
(x8) | 7x3-1/2

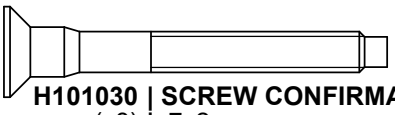

H101030 | SCREW CONFIRMAT BLK
(x8) | 7x2

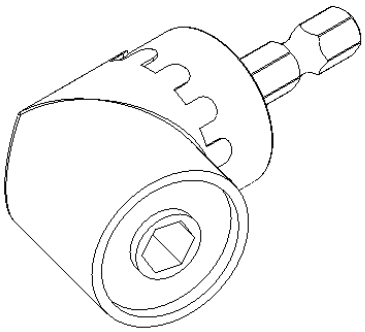

H101114 | RIGHT HAND
(x1) | **DRILL ADAPTER**

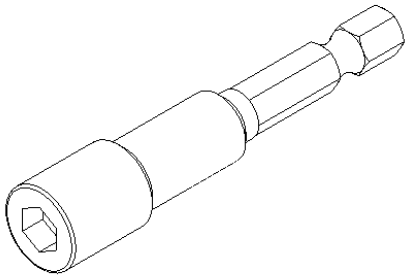

H101106 | SOCKET DRIVER
(x1) |

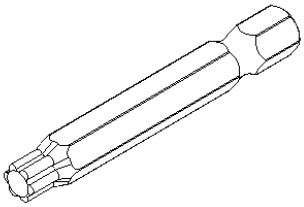

H100147 | TORX BIT
(x1) | T-30

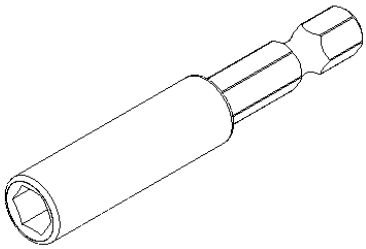

H101100 | MAGNETIC DRIVER
(x1) |

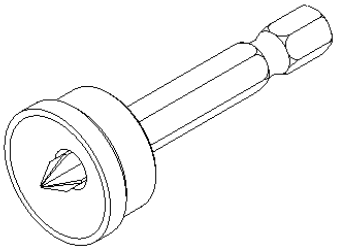

H100764 | SCREW SETTER
(x1) |

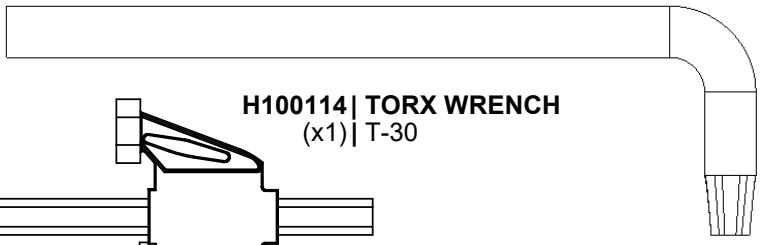

H100114 | TORX WRENCH
(x1) | T-30

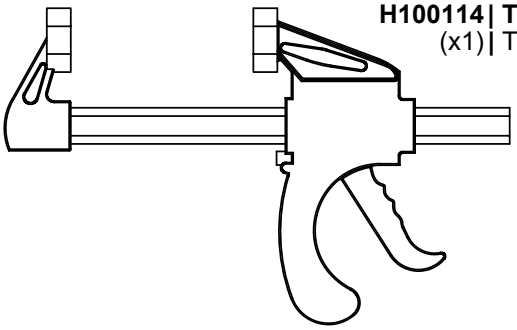

A6P00460 | 6" QUICK RELEASE
(x2) | **BAR CLAMP**

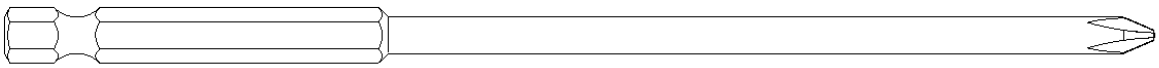

H101261 | PHILLIPS EXTENSION BIT
(x1) |

PRE-ASSEMBLY STEP 1 - SORTING PARTS

It is critical for ease of assembly that you take the time to sort and organize the wood and hardware.

WOOD PARTS:

- **Organize wood parts by the three-digit, alpha-numeric number stamped on each board (ex. P01).**
- **If there are multiple boards with the same stamped number, stack those pieces together.**
- **Stamps can be found on the flat surface of the boards or on the end of the boards.**
- **Allow yourself plenty of room - the wood pieces can take up a significant amount of space.**

NOTE: CARTONS ARE NOT ORGANIZED BY BOARD OR STEP NUMBER.

HARDWARE PARTS:

- **We recommend that you have a separate table to organize the hardware.**
- **Hardware bags are printed with a seven-digit, alpha-numeric part number.**
- **You can organize your hardware by part number or group by hardware type (e.g. bolts, nuts, etc.).**
- **During assembly you only need to reference the last four digits of the number.**

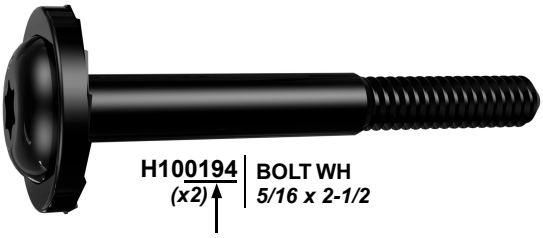

PRE-ASSEMBLY STEP 2 - TOOLS REQUIRED

Cordless Drill
or Electric Drill

Drill
Attachments:
Phillips Head

1/8", 3/16", 3/8" &
7/16" Drill Bits

Phillips Screw Driver

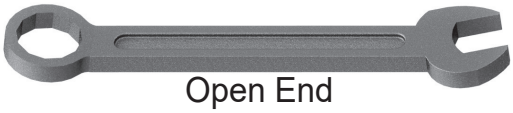

Open End
Wrenches 1/2" &
9/16"

3/8" Drive Ratchet, 1/2" &
7/16" STD Sockets 1/2" & 7/16"
Deep Sockets

Claw Hammer

Rubber Mallet
- Optional

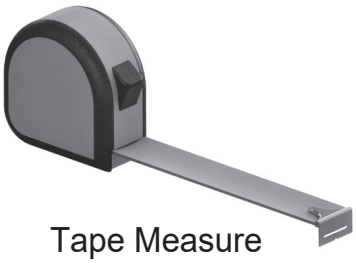

Tape Measure

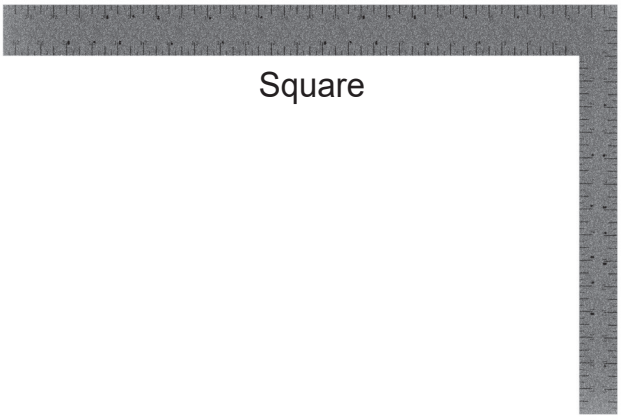

Square

Level 24"

---

8 FOOT LADDER REQUIRED

PRE-ASSEMBLY STEP 3 - CHOOSE YOUR ASSEMBLY METHOD

There are several types of assembly instructions available to you.

1. Printed Assembly Manual included with your set
2. BILT APP - 3D interactive instructions
3. Combination of the Printed Manual and BILT APP (Note: Step numbers can differ between the two methods)

POLYCARBONATE SHEETING INFORMATION - IMPORTANT!

The Polycarbonate Sheeting has UV protection on ONE (1) SIDE.

CRITICAL to install with the UV protection facing the OUTSIDE

- Wear safety gloves to protect against any sharp edges during handling or install.
- Do NOT use knife or sharp object to remove protective film as it may result in damage to polycarbonate sheeting
- Leave film on during install to ensure UV side is facing outside.
- Peel protective film back from edges approximately 2” (5cm) during installation.
- Remove film completely after installation.

NOTE: Do not store polycarbonate sheeting with film outside in direct sunlight or rain. It may make removal of film more difficult.

STEP 4 - BACK WALL ASSEMBLY

QTY	PART NUMBER	DESCRIPTION
2	H100193	NUT BARREL WH 5/16 X 1 1/2 BLK
2	H100195	BOLT WH 5/16x2 3/4 BLK
10	H100198	WASHER LOCK EXT 8x19
6	H100205	BOLT WH 5/16x2 1/4 BLK
8	H100379	TNUT-5/16" BLK
2	H100407	BOLT WH 5/16x1 1/2 BLK

F01 (x2) UPRIGHT - W4L20855
1 7/16"2 3/8"x86 11/16" (36x60x2202)

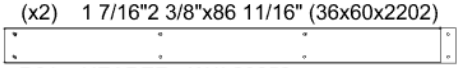

D01 (x1) HEADER - W4L20853
1 7/16"x5 1/4"x67 1/2" (36x134x1714)

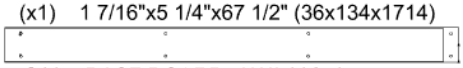

G02 (x1) BASE BOARD - W4L20850
15/16"x5 1/4"x68 7/16" (24x134x1738)

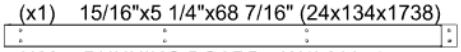

H02 (x1) RUNNING BOARD - W4L20851
15/16"x3 3/8"x68 7/16" (24x86x1738)

A4M02096 (x1) BRACKET

- THE USE OF SAWHORSES IS RECOMMENDED DURING THE ASSEMBLY OF ALL WALL ASSEMBLIES.
- INSERT T-NUTS FIRST.
- HAND TIGHTEN ONLY.
- NOTE NOTCHES ON BOARDS FOR CORRECT ORIENTATION.

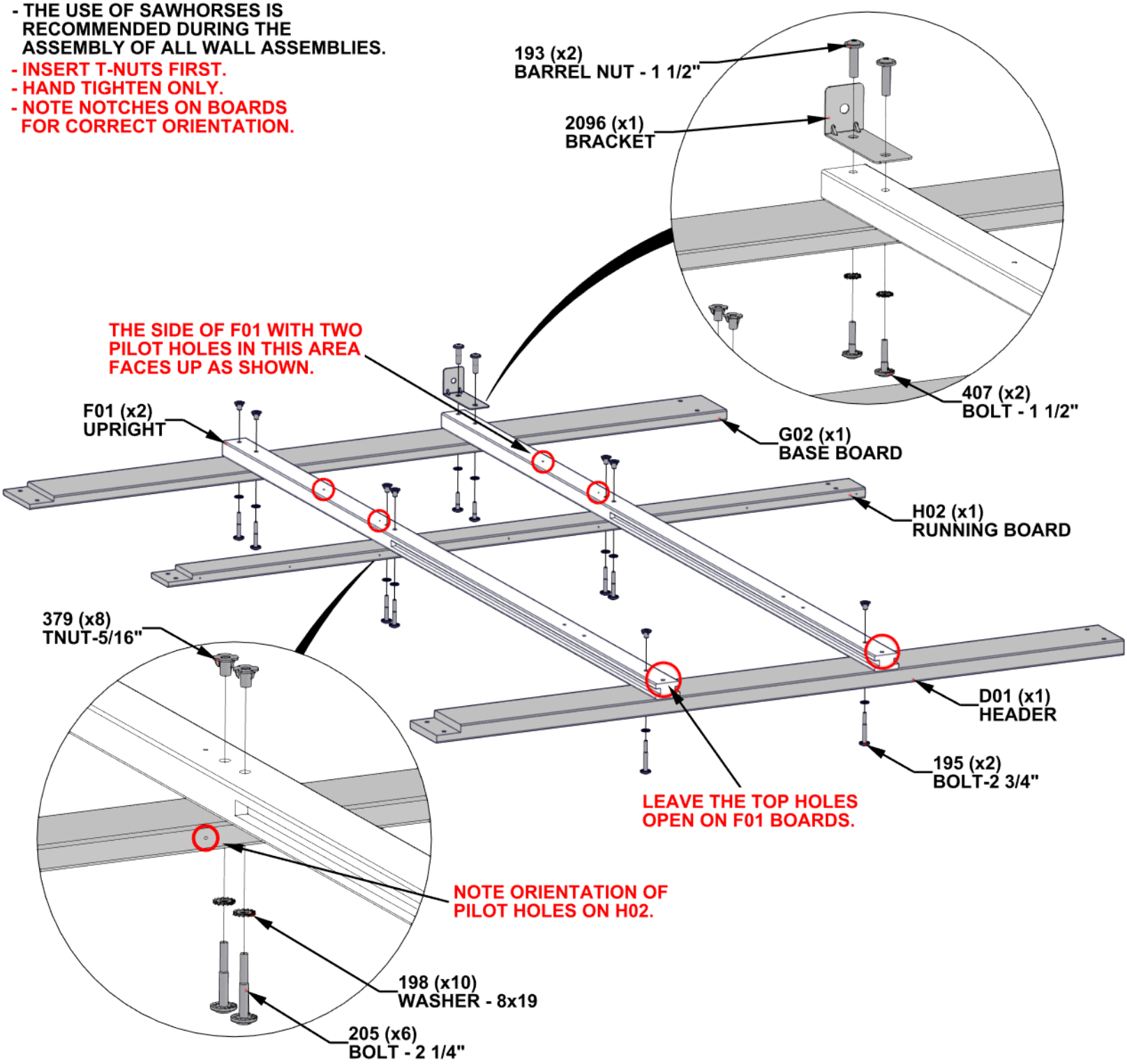

STEP 5 - BACK WALL ASSEMBLY

QTY	PART NUMBER	DESCRIPTION
4	H100193	NUT BARREL WH 5/16 X 1 1/2 BLK
4	H100195	BOLT WH 5/16x2 3/4 BLK
20	H100198	WASHER LOCK EXT 8x19
12	H100205	BOLT WH 5/16x2 1/4 BLK
16	H100379	TNUT-5/16" BLK
4	H100407	BOLT WH 5/16x1 1/2 BLK

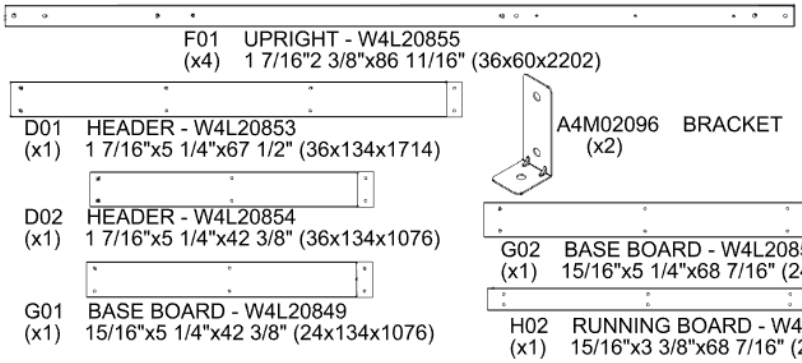

- INSERT T-NUTS FIRST.
- HAND TIGHTEN ONLY.
- NOTE NOTCHES ON BOARDS FOR CORRECT ORIENTATION.

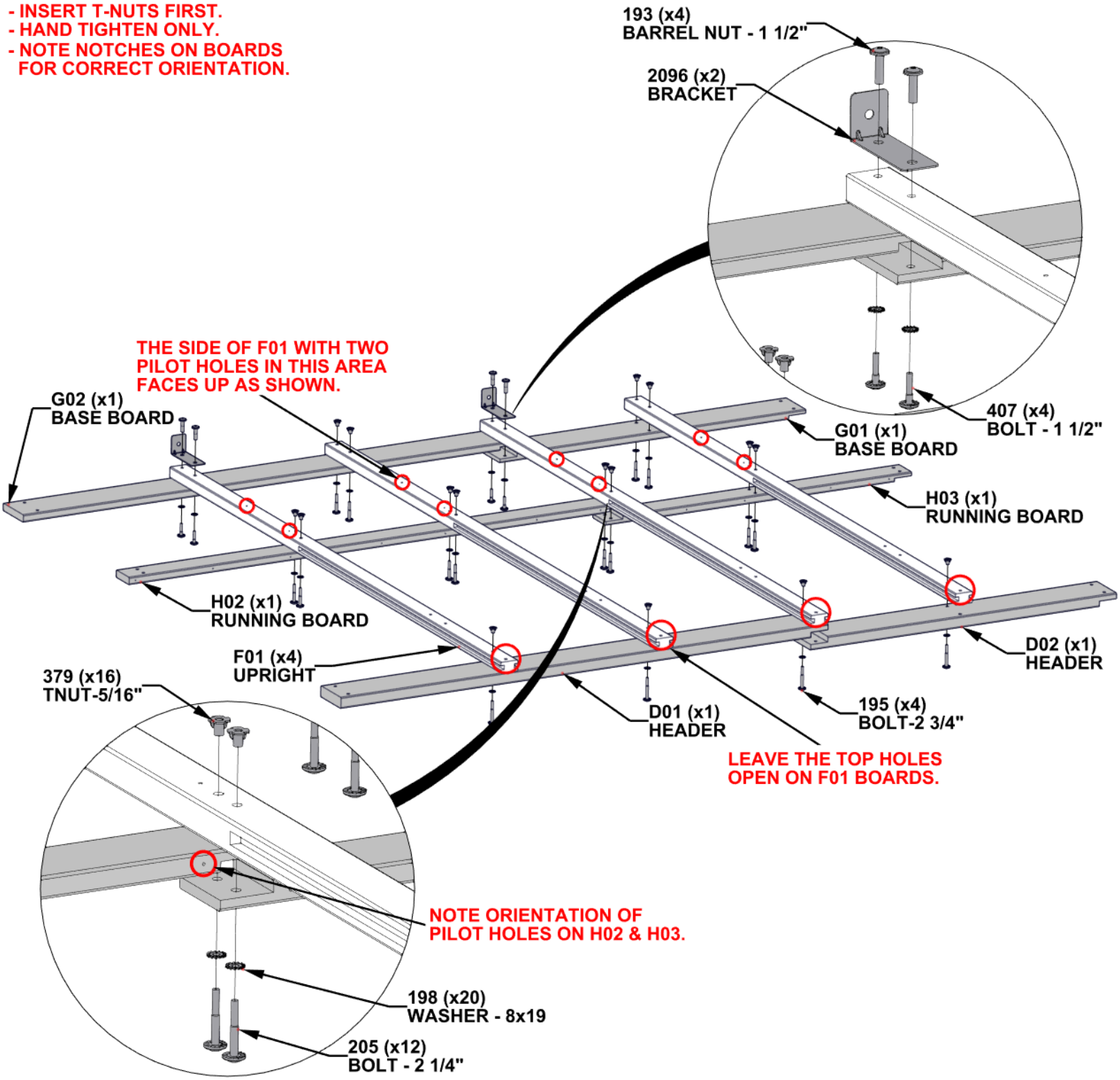

STEP 6 - BACK WALL ASSEMBLY

QTY	PART NUMBER	DESCRIPTION
2	H100193	NUT BARREL WH 5/16 X 1 1/2 BLK
1	H100195	BOLT WH 5/16x2 3/4 BLK
5	H100198	WASHER LOCK EXT 8x19
2	H100205	BOLT WH 5/16x2 1/4 BLK
3	H100379	TNUT-5/16" BLK
2	H100407	BOLT WH 5/16x1 1/2 BLK

F01 (x1) UPRIGHT - W4L20855
1 7/16"2 3/8"x86 11/16" (36x60x2202)

A4M02096 (x1) BRACKET

- INSERT T-NUTS FIRST.
- HAND TIGHTEN ONLY.
- NOTE NOTCHES ON BOARDS FOR CORRECT ORIENTATION.

193 (x2) BARREL NUT - 1 1/2"

2096 (x1) BRACKET

F01 (x1) UPRIGHT

198 (x5) WASHER - 8x19

407 (x2) BOLT - 1 1/2"

THE SIDE OF F01 WITH TWO PILOT HOLES IN THIS AREA FACES UP AS SHOWN.

ASSEMBLY FROM STEP 4

195 (x1) BOLT-2 3/4"

ASSEMBLY FROM STEP 5

379 (x3) TNUT-5/16"

205 (x2) BOLT - 2 1/4"

STEP 7 - SIDE WALL ASSEMBLY

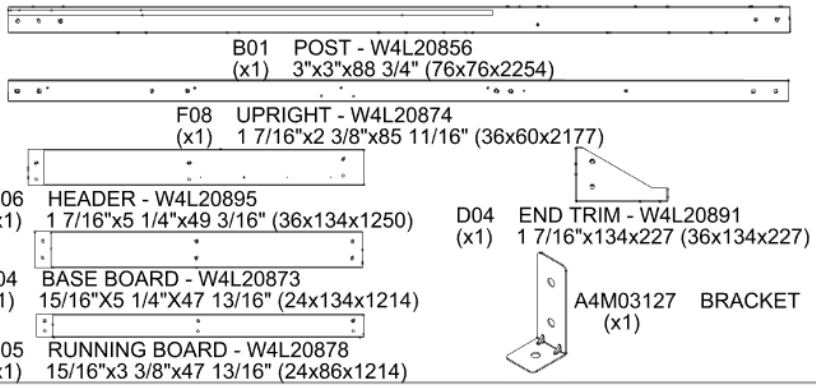

QTY	PART NUMBER	DESCRIPTION
2	H100193	NUT BARREL WH 5/16 X 1 1/2 BLK
2	H100195	BOLT WH 5/16x2 3/4 BLK
12	H100198	WASHER LOCK EXT 8x19
2	H100205	BOLT WH 5/16x2 1/4 BLK
8	H100379	TNUT-5/16" BLK
2	H100407	BOLT WH 5/16x1 1/2 BLK
2	H100415	BOLT WH 5/16x3 3/4 BLK
2	H100458	LAG SCREW WH 5/16x2 BLK
2	H100974	BOLT WH 5/16x5 3/4 BLK

- INSERT T-NUTS FIRST.
- HAND TIGHTEN ONLY.
- NOTE NOTCHES ON BOARDS FOR CORRECT ORIENTATION.

3127 (x1) BRACKET
193 (x2) BARREL NUT - 1 1/2"
G04 (x1) BASE BOARD
B01 (x1) POST
407 (x2) BOLT - 1 1/2"
H05 (x1) RUNNING BOARD
NOTE ORIENTATION OF PILOT HOLES
205 (x2) BOLT - 2 1/4"
F08 (x1) UPRIGHT
379 (x8) TNUT-5/16"
415 (x2) BOLT - 3 3/4"
458 (x2) LAG SCREW - 2"
D06 (x1) HEADER
NOTE GROOVES IN B01 & F08 FOR CORRECT ORIENTATION.
198 (x12) WASHER - 8x19
D04 (x1) END TRIM
195 (x2) BOLT-2 3/4"
974 (x2) BOLT - 5 3/4"

STEP 8 - GREENHOUSE ASSEMBLY

QTY	PART NUMBER	DESCRIPTION
6	H100198	WASHER LOCK EXT 8x19
6	H100379	TNUT-5/16" BLK
4	H100415	BOLT WH 5/16x3 3/4 BLK
2	H100513	BOLT WH 5/16x4 1/4 BLK

- INSERT T-NUTS FIRST.
- HAND TIGHTEN ONLY.

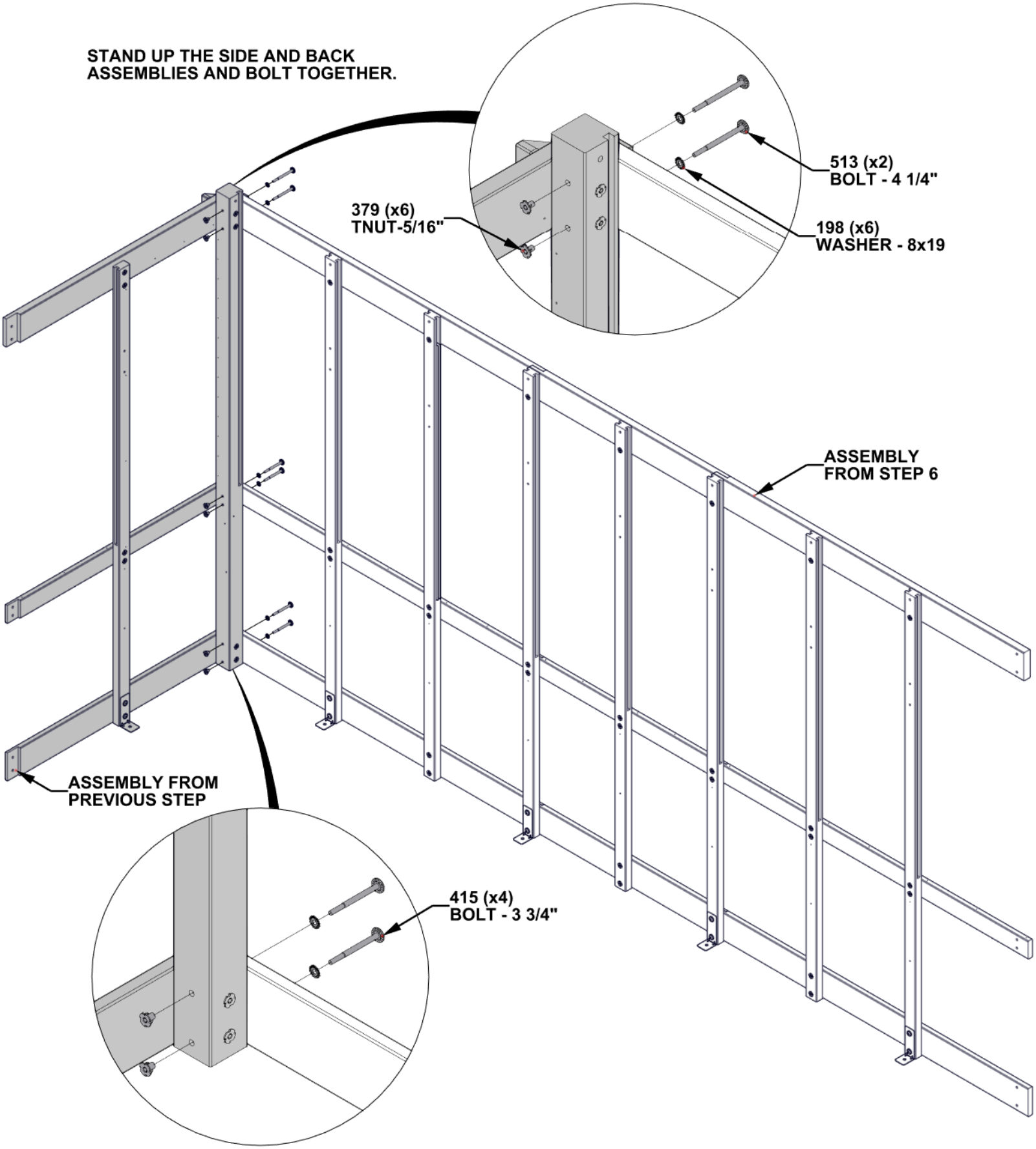

STEP 9 - SIDE WALL ASSEMBLY

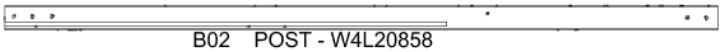

B02 POST - W4L20858
(x1) 3"x3"x88 3/4" (76x76x2254)

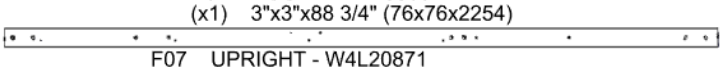

F07 UPRIGHT - W4L20871
(x1) 1 7/16"x2 3/8"x85 11/16" (36x60x2177)

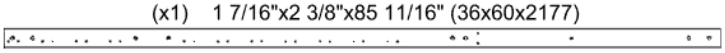

F09 UPRIGHT - W4L20875
(x1) 1 7/16"x2 3/8"x85 11/16" (36x60x2177)

A4M03127 BRACKET
(x2)

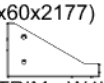

D04 END TRIM - W4L20891
(x1) 1 7/16"x134x227 (36x134x227)

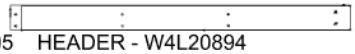

D05 HEADER - W4L20894
(x1) 1 7/16"x5 1/4"x71 5/8" (36x134x1819)

H04 RUNNING BOARD - W4L20877
(x1) 15/16"x3 3/8"x70 3/16" (24x86x1783)

G03 BASE BOARD - W4L20872
(x1) 15/16"X5 1/4"X70 3/16" (24x134x1783)

QTY	PART NUMBER	DESCRIPTION
4	H100193	NUT BARREL WH 5/16 X 1 1/2 BLK
4	H100195	BOLT WH 5/16x2 3/4 BLK
18	H100198	WASHER LOCK EXT 8x19
4	H100205	BOLT WH 5/16x2 1/4 BLK
12	H100379	TNUT-5/16" BLK
4	H100407	BOLT WH 5/16x1 1/2 BLK
2	H100415	BOLT WH 5/16x3 3/4 BLK
2	H100458	LAG SCREW WH 5/16x2 BLK
2	H100974	BOLT WH 5/16x5 3/4 BLK

- INSERT T-NUTS FIRST.
- HAND TIGHTEN ONLY.
- NOTE NOTCHES ON BOARDS FOR CORRECT ORIENTATION.

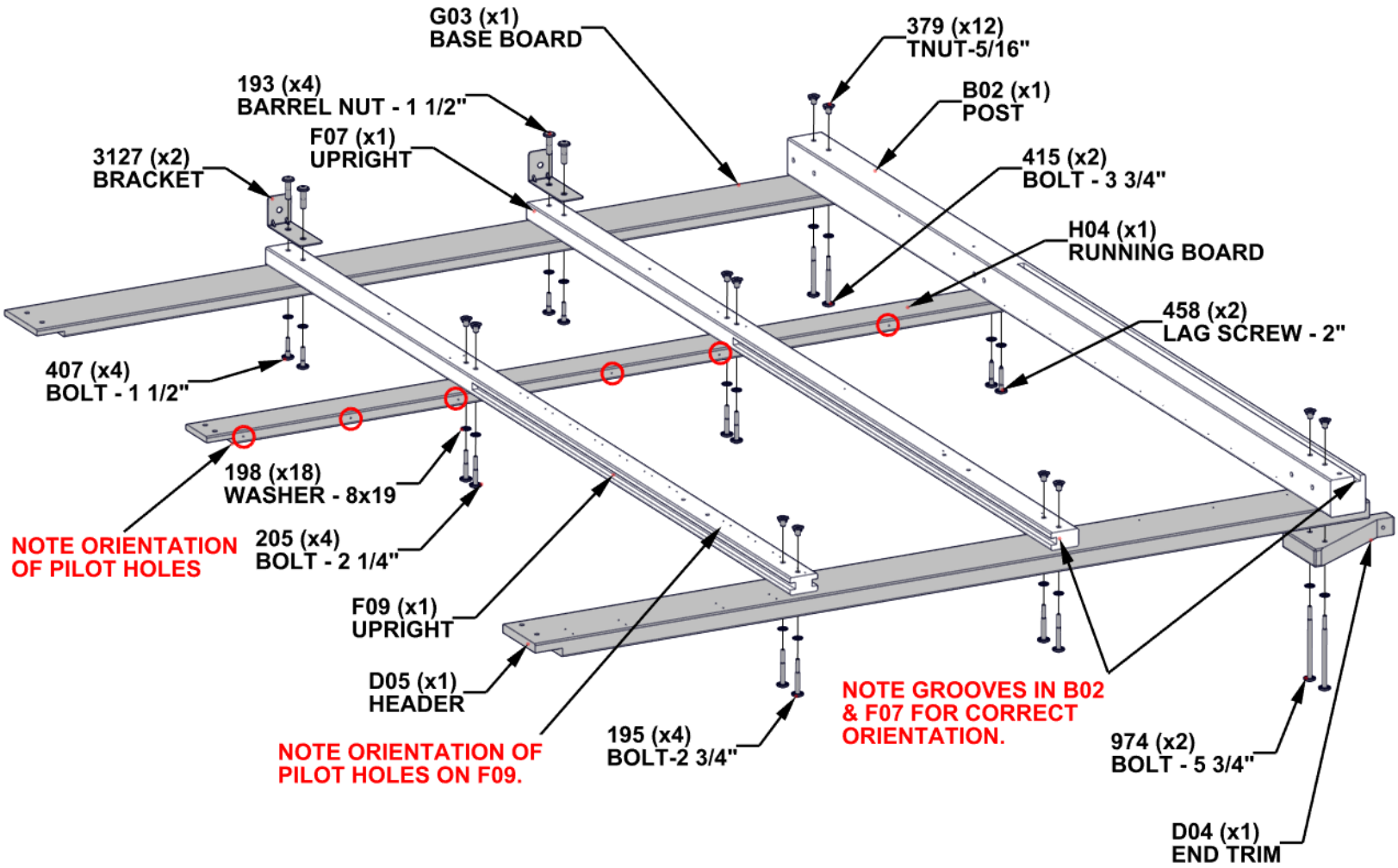

STEP 10 - GREENHOUSE ASSEMBLY

QTY	PART NUMBER	DESCRIPTION
2	H100193	NUT BARREL WH 5/16 X 1 1/2 BLK
2	H100195	BOLT WH 5/16x2 3/4 BLK
6	H100198	WASHER LOCK EXT 8x19
2	H100205	BOLT WH 5/16x2 1/4 BLK
4	H100379	TNUT-5/16" BLK
2	H100407	BOLT WH 5/16x1 1/2 BLK

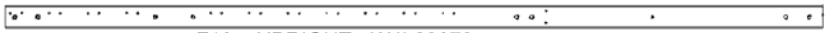

F10 UPRIGHT - W4L20876
(x1) 1 7/16"x2 3/8"x85 11/16" (36x60x2177)

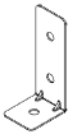

A4M03127 BRACKET
(x1)

- INSERT T-NUTS FIRST.
- HAND TIGHTEN ONLY.

198 (x6)
WASHER - 8x19

195 (x2)
BOLT-2 3/4"

NOTE ORIENTATION OF PILOT HOLES

STAND UP AND ATTACH SIDE ASSEMBLY AS SHOWN.

F10 (x1)
UPRIGHT

379 (x4)
TNUT-5/16"

205 (x2)
BOLT - 2 1/4"

ASSEMBLY FROM PREVIOUS STEP

407 (x2)
BOLT - 1 1/2"

193 (x2)
BARREL NUT - 1 1/2"

3127 (x1)
BRACKET

STEP 11 - SIDE WALL ASSEMBLY

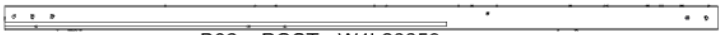

B02 POST - W4L20858
(x1) 3"x3"x88 3/4" (76x76x2254)

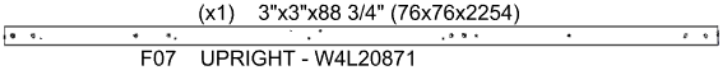

F07 UPRIGHT - W4L20871
(x1) 1 7/16"x2 3/8"x85 11/16" (36x60x2177)

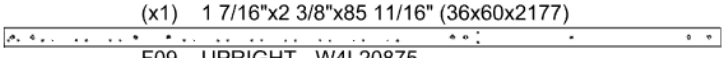

F09 UPRIGHT - W4L20875
(x1) 1 7/16"x2 3/8"x85 11/16" (36x60x2177)

A4M03127 BRACKET
(x2)

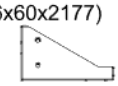

D04 END TRIM - W4L20891
(x1) 1 7/16"x134x227 (36x134x227)

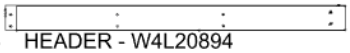

D05 HEADER - W4L20894
(x1) 1 7/16"x5 1/4"x71 5/8" (36x134x1819)

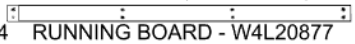

H04 RUNNING BOARD - W4L20877
(x1) 15/16"x3 3/8"x70 3/16" (24x86x1783)

G03 BASE BOARD - W4L20872
(x1) 15/16"X5 1/4"X70 3/16" (24x134x1783)

QTY	PART NUMBER	DESCRIPTION
4	H100193	NUT BARREL WH 5/16 X 1 1/2 BLK
4	H100195	BOLT WH 5/16x2 3/4 BLK
18	H100198	WASHER LOCK EXT 8x19
4	H100205	BOLT WH 5/16x2 1/4 BLK
12	H100379	TNUT-5/16" BLK
4	H100407	BOLT WH 5/16x1 1/2 BLK
2	H100415	BOLT WH 5/16x3 3/4 BLK
2	H100458	LAG SCREW WH 5/16x2 BLK
2	H100974	BOLT WH 5/16x5 3/4 BLK

- **INSERT T-NUTS FIRST.**
- **HAND TIGHTEN ONLY.**
- **NOTE NOTCHES ON BOARDS FOR CORRECT ORIENTATION.**

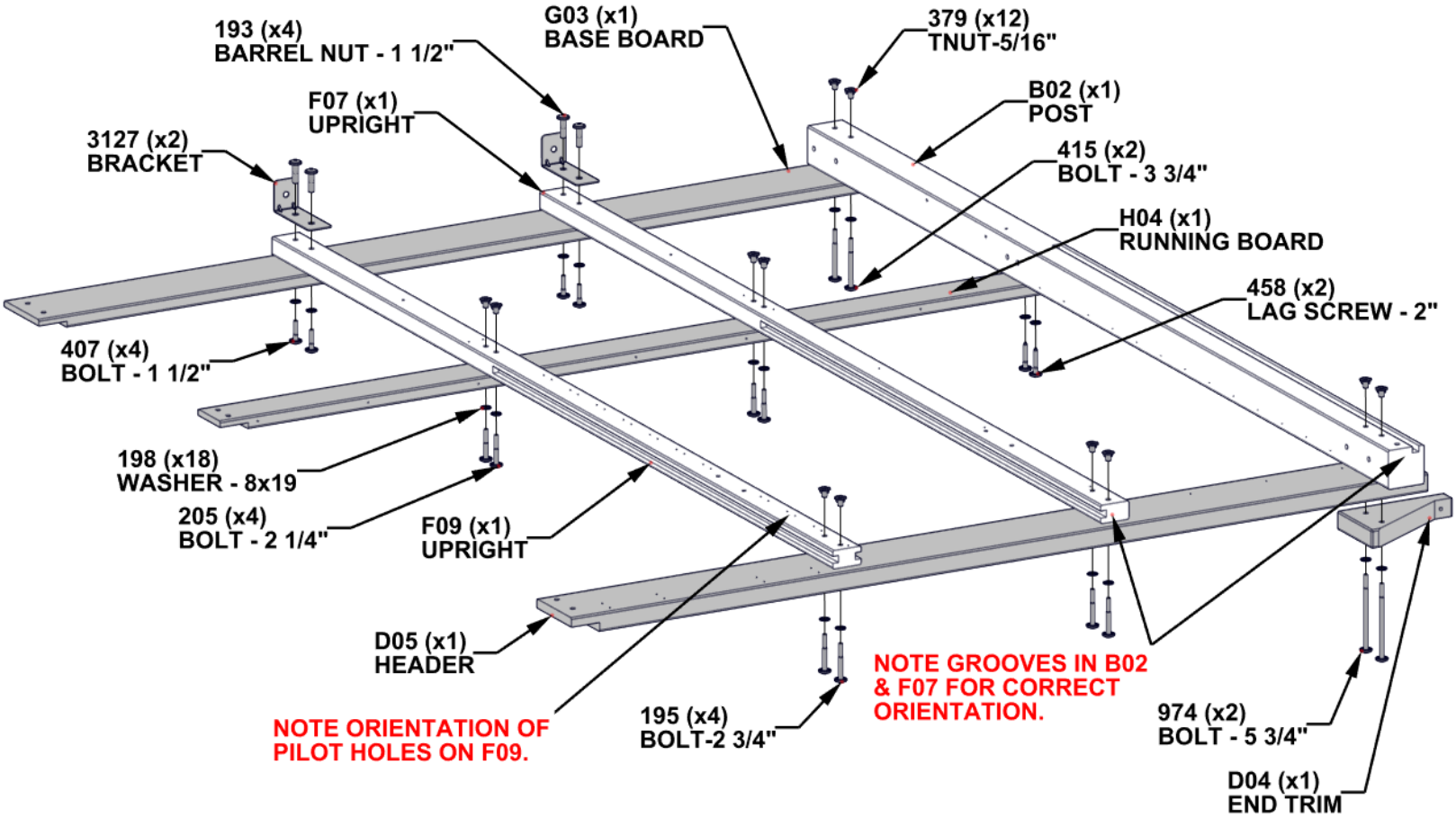

STEP 12 - GREENHOUSE ASSEMBLY

QTY	PART NUMBER	DESCRIPTION
6	H100198	WASHER LOCK EXT 8x19
6	H100379	TNUT-5/16" BLK
4	H100415	BOLT WH 5/16x3 3/4 BLK
2	H100513	BOLT WH 5/16x4 1/4 BLK

- INSERT T-NUTS FIRST.
- HAND TIGHTEN ONLY.

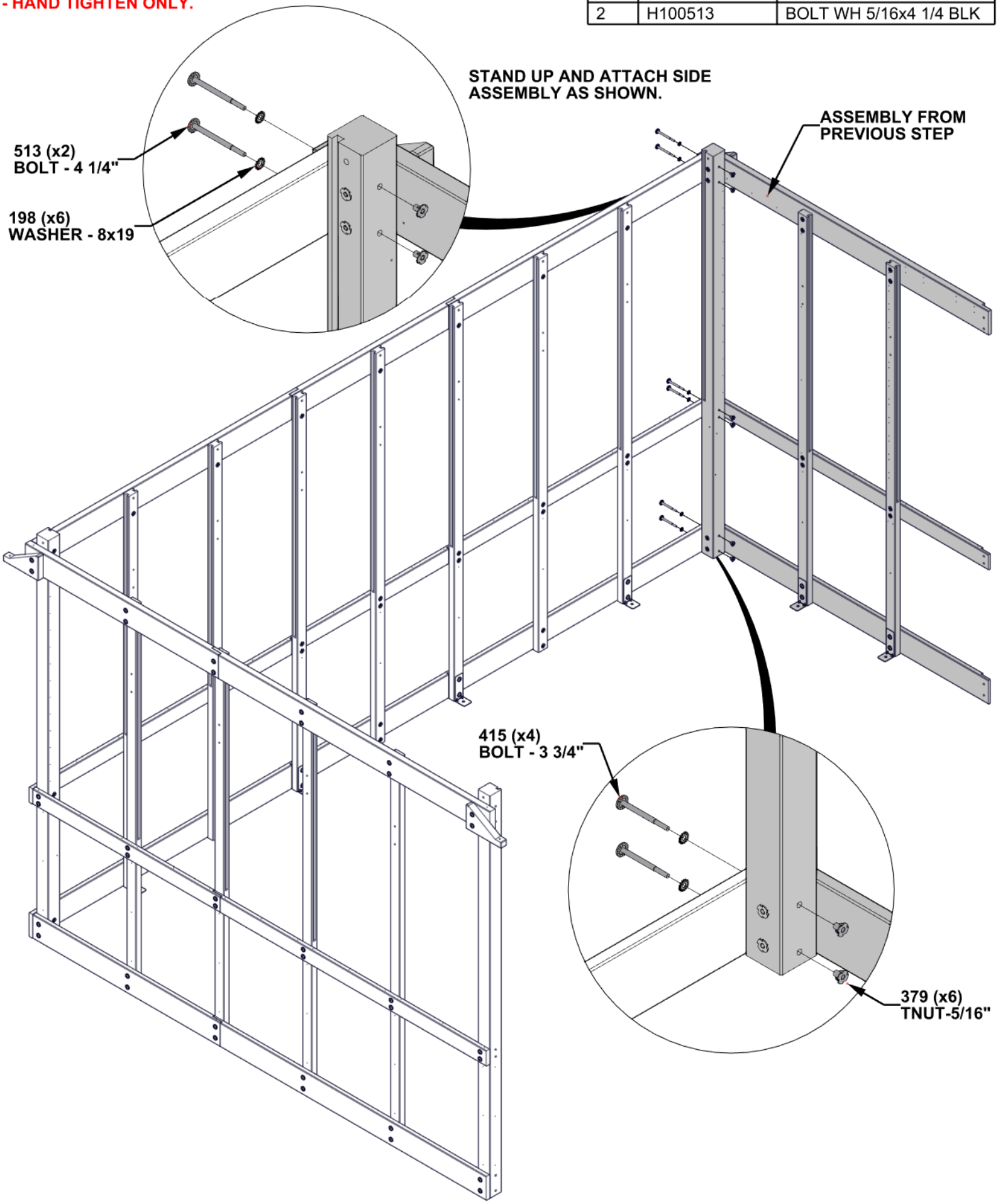

STEP 13 - SIDE WALL ASSEMBLY

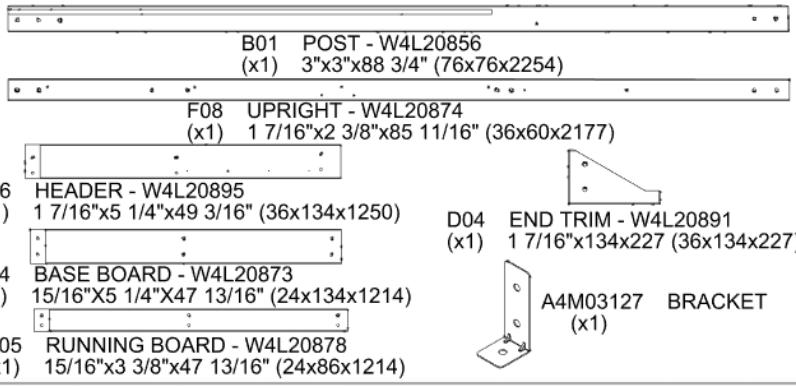

QTY	PART NUMBER	DESCRIPTION
2	H100193	NUT BARREL WH 5/16 X 1 1/2 BLK
2	H100195	BOLT WH 5/16x2 3/4 BLK
12	H100198	WASHER LOCK EXT 8x19
2	H100205	BOLT WH 5/16x2 1/4 BLK
8	H100379	TNUT-5/16" BLK
2	H100407	BOLT WH 5/16x1 1/2 BLK
2	H100415	BOLT WH 5/16x3 3/4 BLK
2	H100458	LAG SCREW WH 5/16x2 BLK
2	H100974	BOLT WH 5/16x5 3/4 BLK

- INSERT T-NUTS FIRST.
- HAND TIGHTEN ONLY.
- NOTE NOTCHES ON BOARDS FOR CORRECT ORIENTATION.

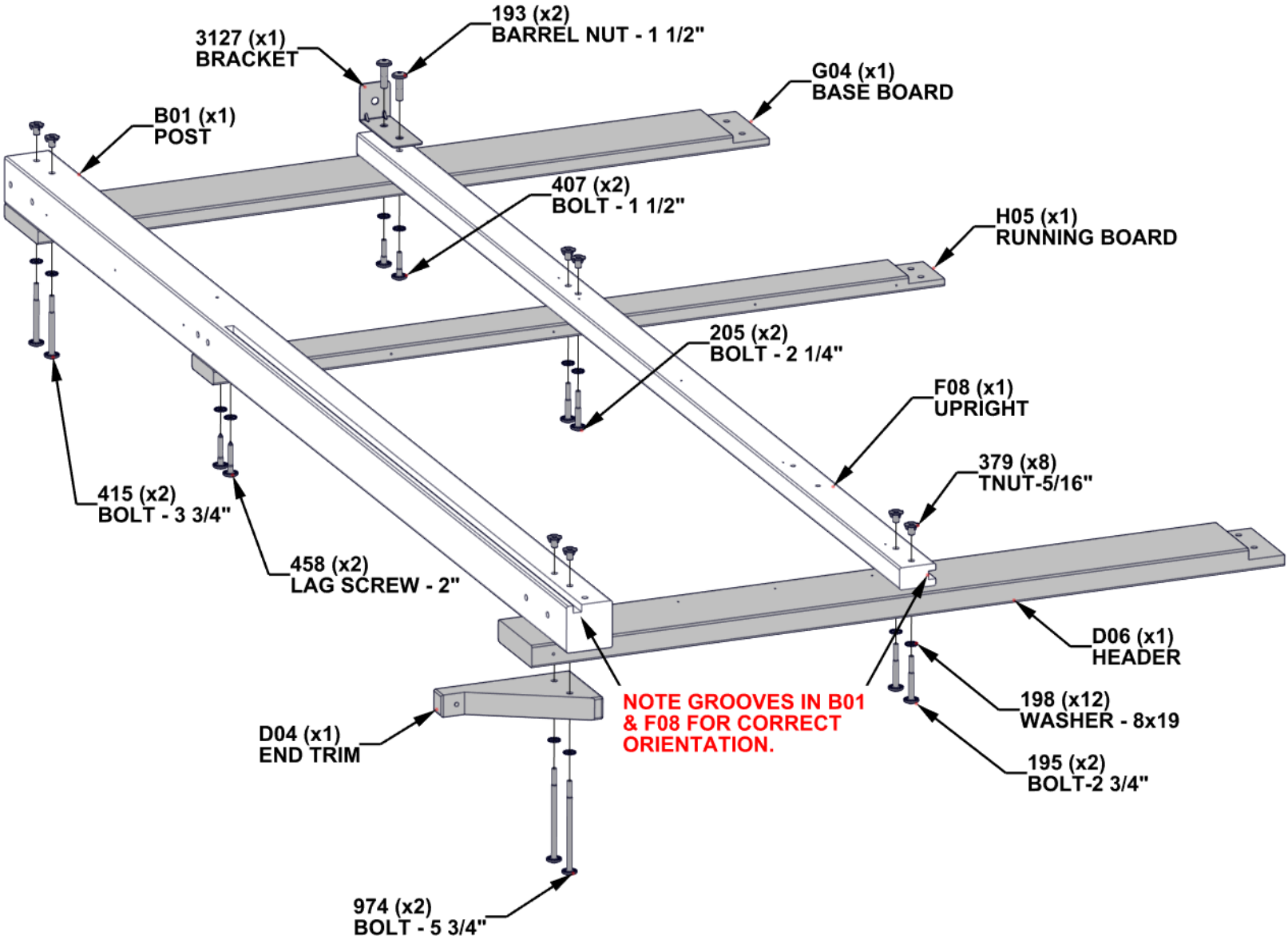

STEP 14 - GREENHOUSE ASSEMBLY

QTY	PART NUMBER	DESCRIPTION
2	H100193	NUT BARREL WH 5/16 X 1 1/2 BLK
2	H100195	BOLT WH 5/16x2 3/4 BLK
6	H100198	WASHER LOCK EXT 8x19
2	H100205	BOLT WH 5/16x2 1/4 BLK
4	H100379	TNUT-5/16" BLK
2	H100407	BOLT WH 5/16x1 1/2 BLK

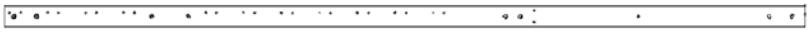

F10 UPRIGHT - W4L20876
(x1) 1 7/16"x2 3/8"x85 11/16" (36x60x2177)

A4M03127 BRACKET
(x1)

NOTE ORIENTATION OF PILOT HOLES

195 (x2)
BOLT-2 3/4"

- INSERT T-NUTS FIRST.
- HAND TIGHTEN ONLY.

379 (x4)
TNUT-5/16"

STAND UP AND ATTACH SIDE ASSEMBLY AS SHOWN.

F10 (x1)
UPRIGHT

205 (x2)
BOLT - 2 1/4"

ASSEMBLY FROM PREVIOUS STEP

407 (x2)
BOLT - 1 1/2"

198 (x6)
WASHER - 8x19

3127 (x1)
BRACKET

193 (x2)
BARREL NUT - 1 1/2"

STEP 15 - FRONT WALL ASSEMBLY

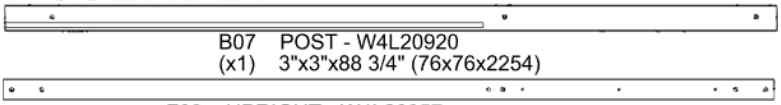

B07 POST - W4L20920
(x1) 3"x3"x88 3/4" (76x76x2254)

F02 UPRIGHT - W4L20857
(x1) 1 7/16"x2 3/8"x86 11/16" (36x60x2202)

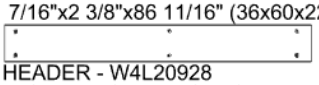

D08 HEADER - W4L20928
(x1) 1 7/16"X5 1/4"X43 5/16" (36x134x1100)

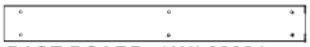

G07 BASE BOARD - W4L20924
(x1) 15/16"X5 1/4"X44 1/4" (24x134x1124)

H08 RUNNING BOARD - W4L20923
(x1) 15/16"X3 3/8"X44 1/4" (24x86x1124)

QTY	PART NUMBER	DESCRIPTION
2	H100193	NUT BARREL WH 5/16 X 1 1/2 BLK
1	H100195	BOLT WH 5/16x2 3/4 BLK
11	H100198	WASHER LOCK EXT 8x19
4	H100205	BOLT WH 5/16x2 1/4 BLK
9	H100379	TNUT-5/16" BLK
2	H100415	BOLT WH 5/16x3 3/4 BLK
2	H100484	BOLT WH 5/16x3 1/4 BLK
2	H100513	BOLT WH 5/16x4 1/4 BLK

A4M02096 BRACKET
(x1)

- INSERT T-NUTS FIRST.
- HAND TIGHTEN ONLY.

193 (x2)
BARREL NUT - 1 1/2"

2096 (x1)
BRACKET

379 (x9)
TNUT-5/16"

G07 (x1)
BASE BOARD

ENSURE CORRECT ORIENTATION OF BOARDS WITH SHOWN DIMENSIONS.

2 3/8"
[62mm]

SIDE OF F02 WITH NO PILOT HOLES FACES UP.

H08 (x1)
RUNNING BOARD

2 3/8"
[62mm]

NOTE ORIENTATION OF PILOT HOLES

205 (x4)
BOLT - 2 1/4"

484 (x2)
BOLT - 3 1/4"

F02 (x1)
UPRIGHT

415 (x2)
BOLT - 3 3/4"

D08 (x1)
HEADER

1 1/2"
[38mm]

B07 (x1)
POST

NOTE GROOVE IN B07 FOR CORRECT ORIENTATION.

LEAVE THE TOP HOLE OPEN ON F02.

198 (x11)
WASHER - 8x19

195 (x1)
BOLT-2 3/4"

513 (x2)
BOLT - 4 1/4"

STEP 16 - FRONT WALL ASSEMBLY

QTY	PART NUMBER	DESCRIPTION
3	H100198	WASHER LOCK EXT 8x19
3	H100363	BOLT WH 5/16x6 BLK
5	H100379	T-NUT 5/16 BLK

B08 POST - W4L20921
(x1) 3"x3"x88 3/4" (76x76x2254)

- INSERT T-NUTS FIRST.
- HAND TIGHTEN ONLY.

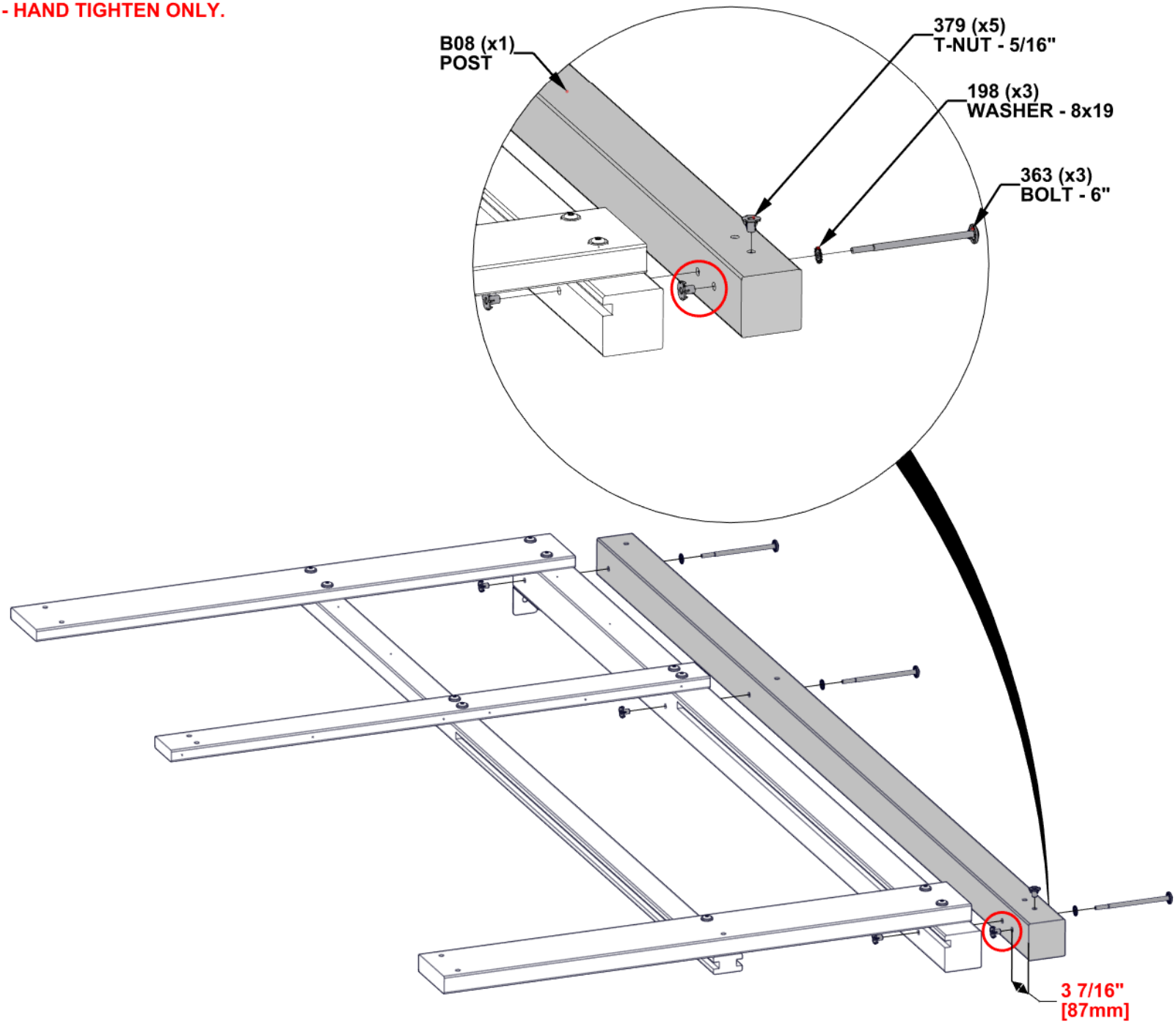

ALIGN THROUGH HOLES IN POSTS AND ENSURE POSTS ARE FLUSH FOR CORRECT ORIENTATION.

STEP 17 - FRONT WALL ASSEMBLY

QTY	PART NUMBER	DESCRIPTION
3	H100198	WASHER LOCK EXT 8x19
3	H100363	BOLT WH 5/16x6 BLK
3	H100379	T-NUT 5/16 BLK

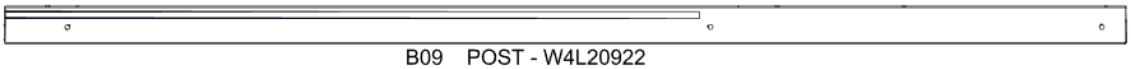

B09 POST - W4L20922
(x1) 3"x3"x88 3/4" (76x76x2254)

- INSERT T-NUTS FIRST.
- HAND TIGHTEN ONLY.

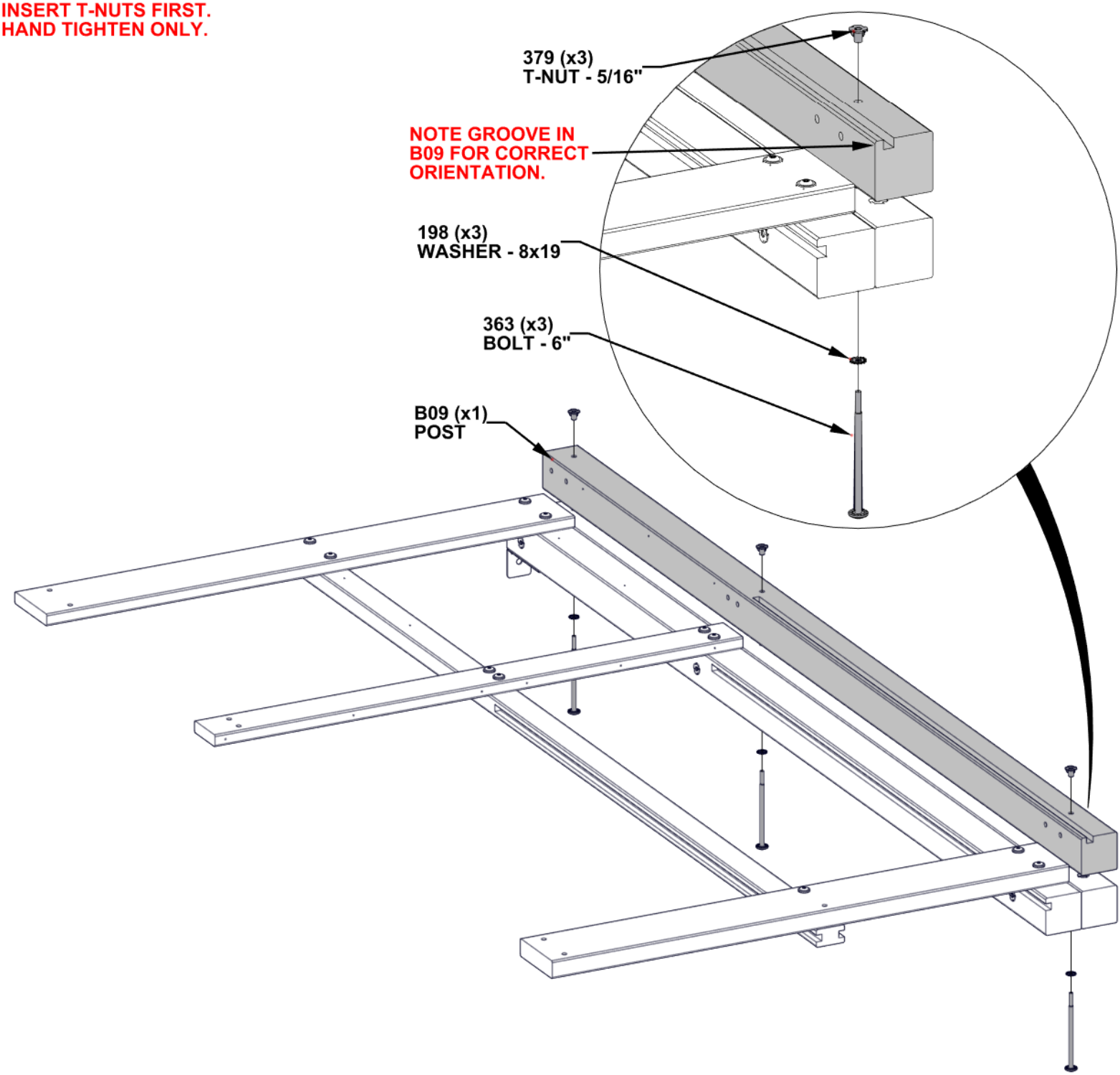

STEP 18 - GREENHOUSE ASSEMBLY

- INSERT T-NUTS FIRST.
- HAND TIGHTEN ONLY.

QTY	PART NUMBER	DESCRIPTION
6	H100198	WASHER LOCK EXT 8x19
6	H100379	TNUT-5/16" BLK
4	H100415	BOLT WH 5/16x3 3/4 BLK
2	H100513	BOLT WH 5/16x4 1/4 BLK

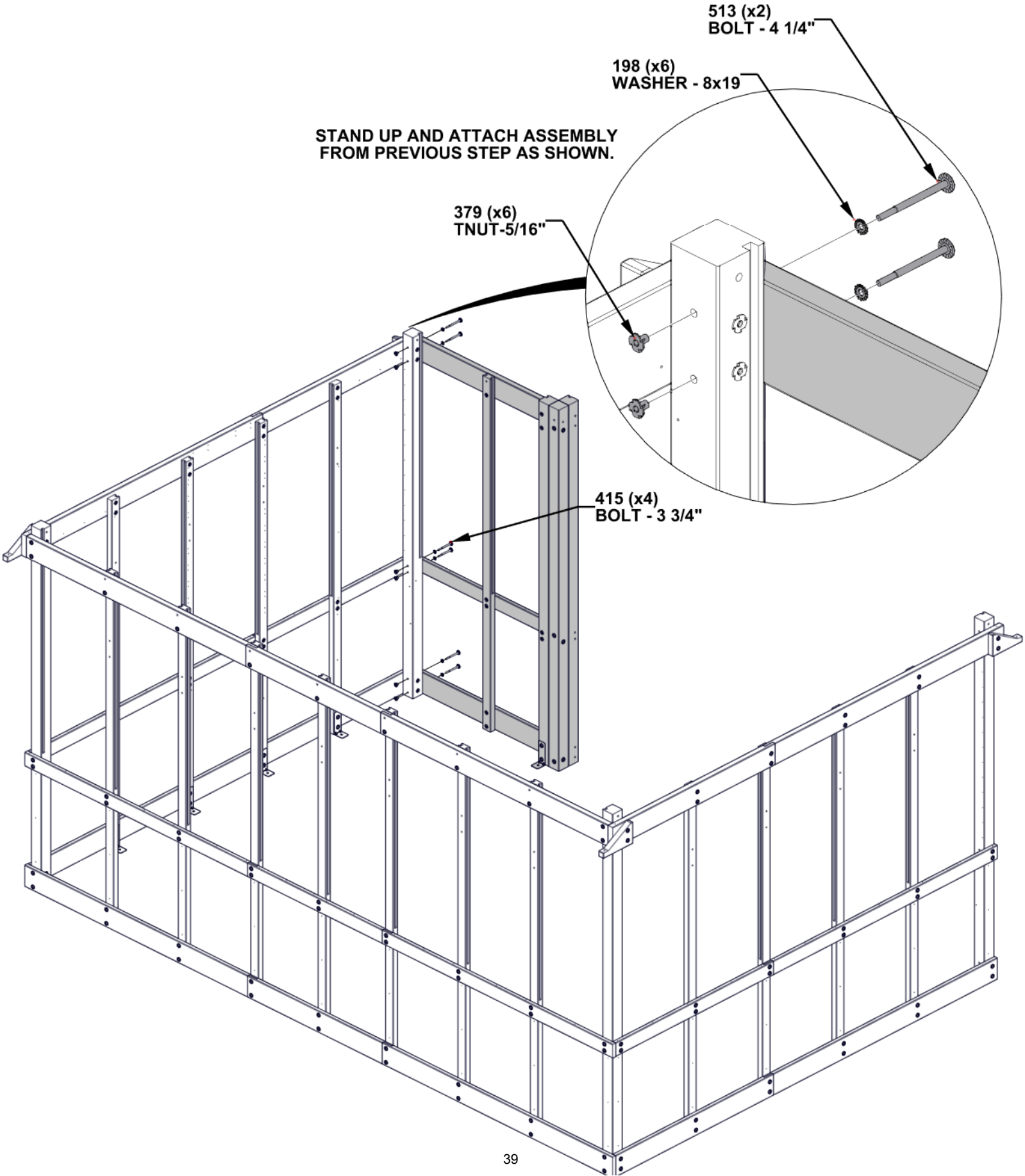

STEP 19 - FRONT WALL ASSEMBLY

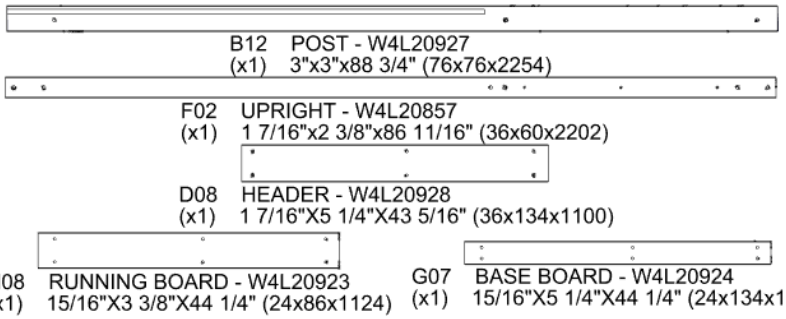

QTY	PART NUMBER	DESCRIPTION
2	H100193	NUT BARREL WH 5/16 X 1 1/2 BLK
1	H100195	BOLT WH 5/16x2 3/4 BLK
11	H100198	WASHER LOCK EXT 8x19
4	H100205	BOLT WH 5/16x2 1/4 BLK
9	H100379	TNUT-5/16" BLK
2	H100415	BOLT WH 5/16x3 3/4 BLK
2	H100484	BOLT WH 5/16x3 1/4 BLK
2	H100513	BOLT WH 5/16x4 1/4 BLK

A4M02096 BRACKET
(x1)

- INSERT T-NUTS FIRST.
- HAND TIGHTEN ONLY.

ENSURE CORRECT ORIENTATION OF BOARDS WITH SHOWN DIMENSIONS.

2 3/8" [62mm]

G07 (x1) BASE BOARD

379 (x9) TNUT-5/16"

193 (x2) BARREL NUT - 1 1/2"

2096 (x1) BRACKET

SIDE OF F02 WITH NO PILOT HOLES FACES UP.

H08 (x1) RUNNING BOARD

2 3/8" [62mm]

NOTE ORIENTATION OF PILOT HOLES

205 (x4) BOLT - 2 1/4"

484 (x2) BOLT - 3 1/4"

F02 (x1) UPRIGHT

D08 (x1) HEADER

1 1/2" [38mm]

415 (x2) BOLT - 3 3/4"

B12 (x1) POST

NOTE GROOVE IN B12 FOR CORRECT ORIENTATION.

LEAVE THE TOP HOLE OPEN ON F02.

195 (x1) BOLT-2 3/4"

198 (x11) WASHER - 8x19

513 (x2) BOLT - 4 1/4"

STEP 20 - FRONT WALL ASSEMBLY

QTY	PART NUMBER	DESCRIPTION
3	H100198	WASHER LOCK EXT 8x19
3	H100363	BOLT WH 5/16x6 BLK
5	H100379	TNUT-5/16" BLK

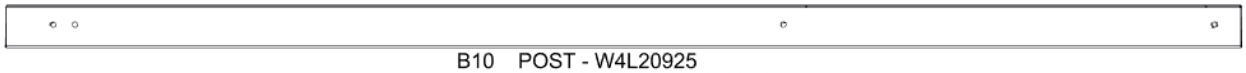

B10 POST - W4L20925
(x1) 3"x3"x88 3/4" (76x76x2254)

379 (x5)
TNUT-5/16" BLK

198 (x3)
WASHER - 8x19

363 (x3)
BOLT - 6"

B10 (x1)
POST

- INSERT T-NUTS FIRST.
- HAND TIGHTEN ONLY.

3 7/16"
[87mm]

ALIGN THROUGH HOLES IN POSTS AND ENSURE POSTS ARE FLUSH FOR CORRECT ORIENTATION.

STEP 21 - FRONT WALL ASSEMBLY

QTY	PART NUMBER	DESCRIPTION
3	H100198	WASHER LOCK EXT 8x19
3	H100363	BOLT WH 5/16x6 BLK
3	H100379	T-NUT 5/16 BLK

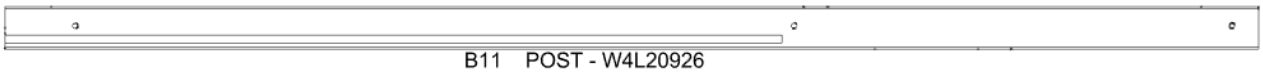

B11 POST - W4L20926
(x1) 3"x3"x88 3/4" (76x76x2254)

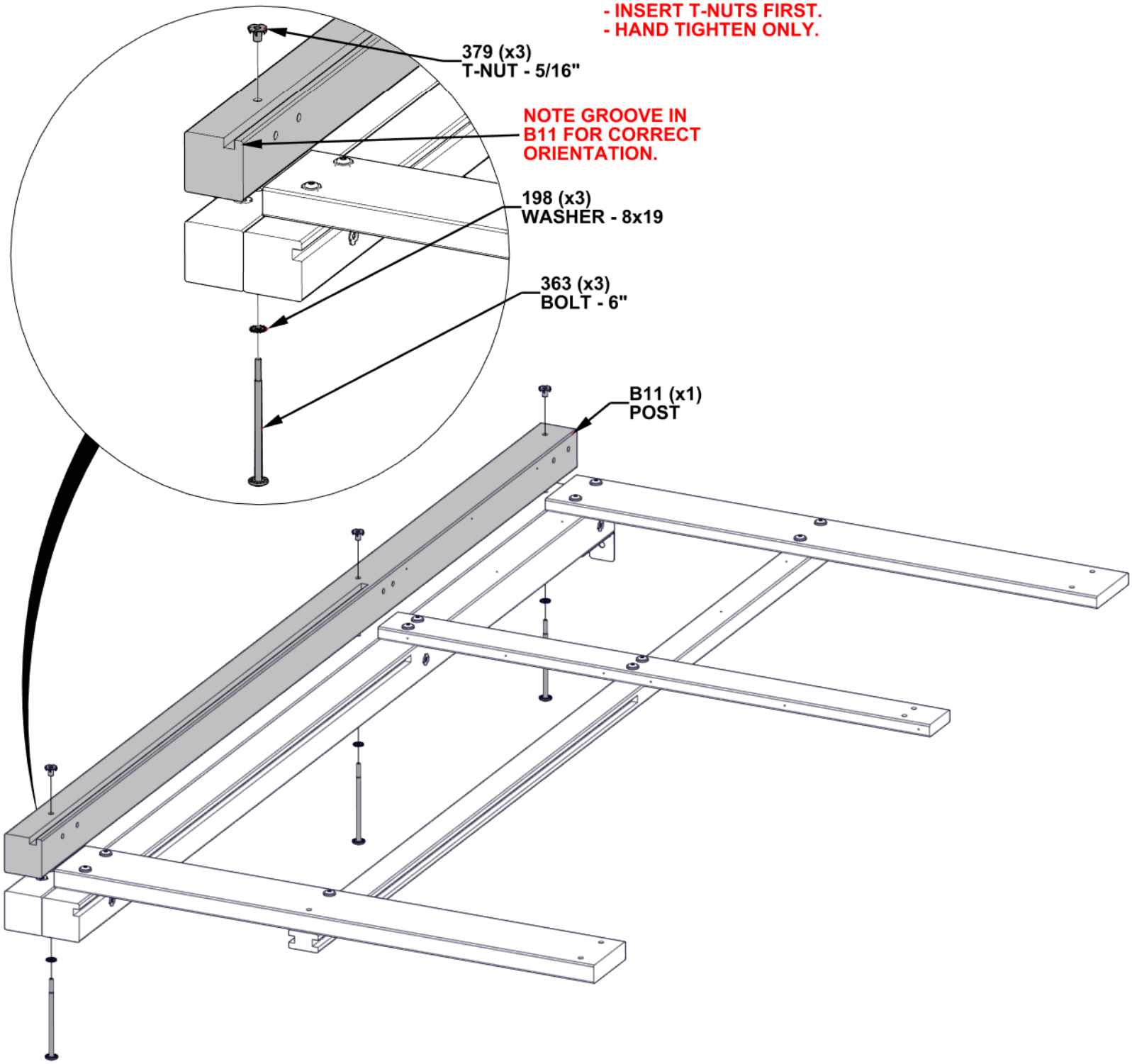

STEP 22 - GREENHOUSE ASSEMBLY

QTY	PART NUMBER	DESCRIPTION
6	H100198	WASHER LOCK EXT 8x19
6	H100379	TNUT-5/16" BLK
4	H100415	BOLT WH 5/16x3 3/4 BLK
2	H100513	BOLT WH 5/16x4 1/4 BLK

- INSERT T-NUTS FIRST.
- HAND TIGHTEN ONLY.

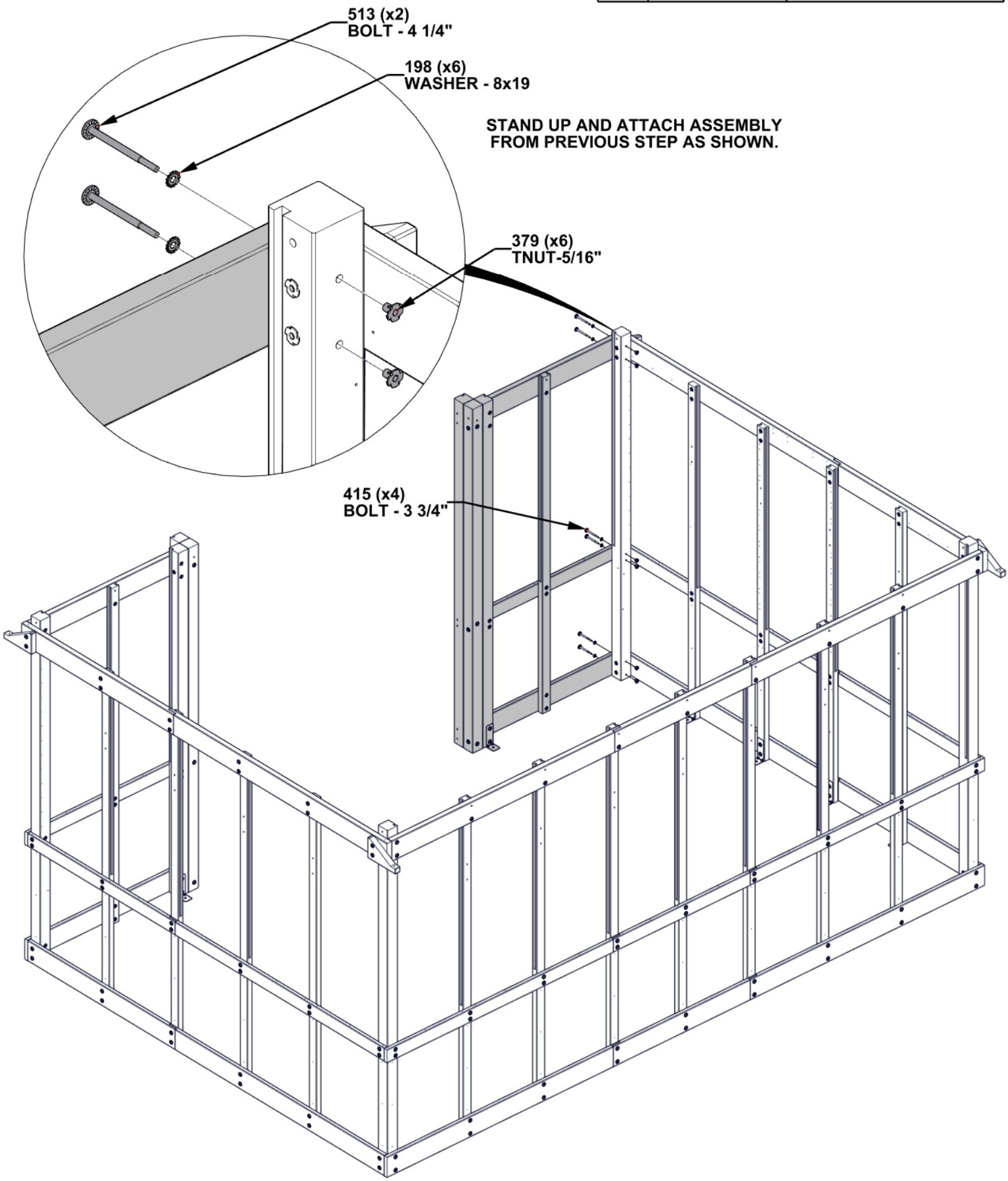

STEP 23 - GREENHOUSE ASSEMBLY

QTY	PART NUMBER	DESCRIPTION
12	H100198	WASHER LOCK EXT 8x19
12	H100379	TNUT-5/16" BLK
8	H100415	BOLT WH 5/16x3 3/4 BLK
4	H100513	BOLT WH 5/16x4 1/4 BLK

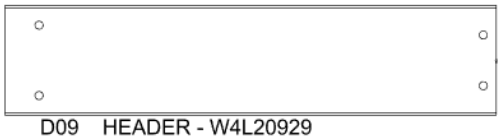

D09 HEADER - W4L20929
(x2) 1 7/16"X5 1/4"X23 11/16" (36x134x602)

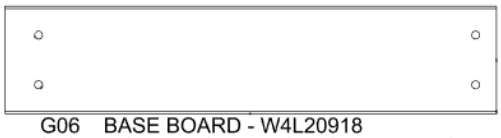

G06 BASE BOARD - W4L20918
(x2) 15/16"X5 1/4"X24 3/16" (24x134x614)

H07 RUNNING BOARD - W4L20919
(x2) 15/16"X3 3/8"X24 3/16" (24x86x614)

- INSERT T-NUTS FIRST.
- HAND TIGHTEN ONLY.

379 (x12)
TNUT-5/16"

198 (x12)
WASHER - 8x19

513 (x4)
BOLT - 4 1/4"

D09 (x2)
HEADER

1 5/8"
[42mm]

ENSURE PILOT HOLES
ON H07 FACE UP.

H07 (x2)
RUNNING BOARD

1 5/8"
[42mm]

G06 (x2)
BASE BOARD

1 5/8"
[42mm]

415 (x8)
BOLT - 3 3/4"

STEP 24 - FRONT WALL ASSEMBLY

QTY	PART NUMBER	DESCRIPTION
4	H100193	NUT BARREL WH 5/16 X 1 1/2 BLK
4	H100195	BOLT WH 5/16x2 3/4 BLK
12	H100198	WASHER LOCK EXT 8x19
4	H100205	BOLT WH 5/16x2 1/4 BLK
8	H100379	TNUT-5/16" BLK
4	H100503	BOLT WH 5/16x3 1/2 BLK

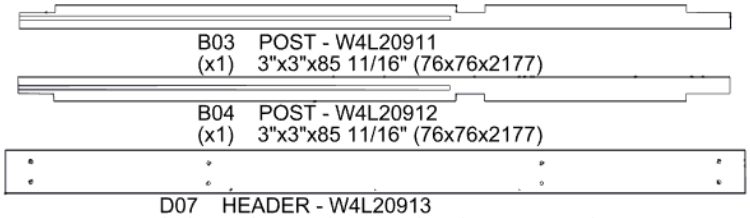

B03 POST - W4L20911
(x1) 3"x3"x85 11/16" (76x76x2177)

B04 POST - W4L20912
(x1) 3"x3"x85 11/16" (76x76x2177)

D07 HEADER - W4L20913
(x1) 1 7/16"x5 1/4"x88 13/16" (36x134x2256)

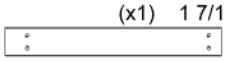

H06 RUNNING BOARD - W4L20915
(x2) 15/16"X3 3/8"X25 7/16" (24x86x646)

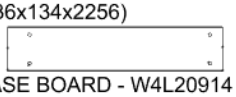

G05 BASE BOARD - W4L20914
(x2) 15/16"X5 1/4"X25 7/16" (24x134x646)

A4M02096 BRACKET
(x2)

A4M02526 DOOR BRACKET
(x1)

- INSERT T-NUTS FIRST.
- HAND TIGHTEN ONLY.

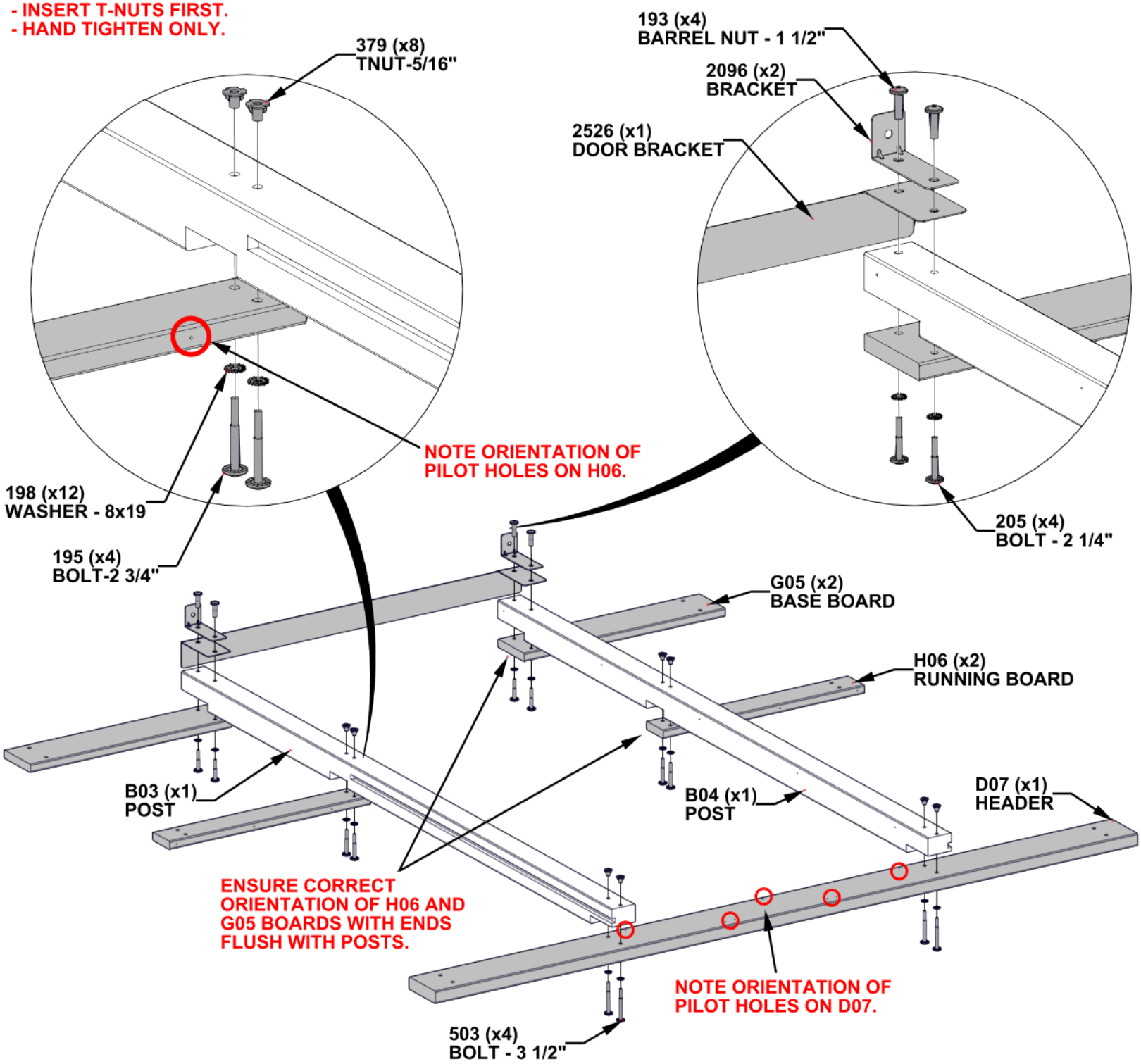

STEP 25 - FRONT WALL ASSEMBLY

QTY	PART NUMBER	DESCRIPTION
12	H100198	WASHER LOCK EXT 8x19
8	H100379	TNUT-5/16" BLK
4	H100415	BOLT WH 5/16x3 3/4 BLK
4	H100458	LAG SCREW WH 5/16x2 BLK
4	H100974	BOLT WH 5/16x5 3/4 BLK

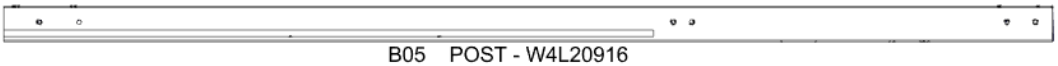

B05 POST - W4L20916
(x1) 3"x3"x88 3/4" (76x76x2254)

B06 POST - W4L20917
(x1) 3"x3"x88 3/4" (76x76x2254)

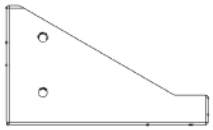

D04 END TRIM - W4L20891
(x2) 1 7/16"x134x227 (36x134x227)

- INSERT T-NUTS FIRST.
- HAND TIGHTEN ONLY.

379 (x8)
TNUT-5/16"

415 (x4)
BOLT - 3 3/4"

B06 (x1)
POST

NOTE GROOVES IN B05 & B06 FOR CORRECT ORIENTATION.

458 (x4)
LAG SCREW - 2"

B05 (x1)
POST

D04 (x2)
END TRIM

198 (x12)
WASHER - 8x19

974 (x4)
BOLT - 5 3/4"

STEP 26 - GREENHOUSE ASSEMBLY

- INSERT T-NUTS FIRST.
- HAND TIGHTEN ONLY.

QTY	PART NUMBER	DESCRIPTION
12	H100198	WASHER LOCK EXT 8x19
12	H100379	TNUT-5/16" BLK
8	H100415	BOLT WH 5/16x3 3/4 BLK
4	H100513	BOLT WH 5/16x4 1/4 BLK

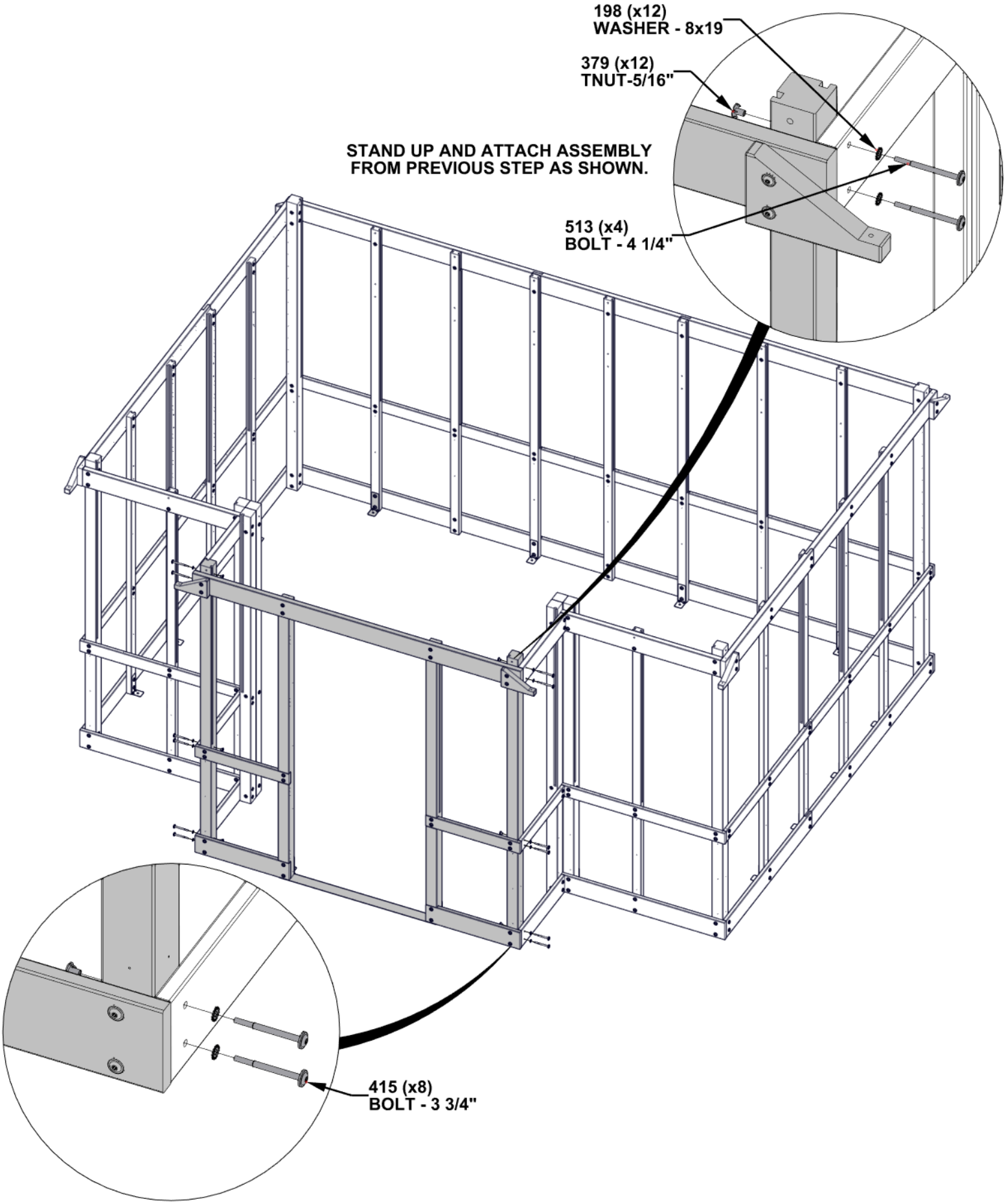

STEP 27 - RAFTER BRACKET ASSEMBLY

QTY	PART NUMBER	DESCRIPTION
9	H100195	BOLT WH 5/16x2 3/4 BLK
9	H100379	TNUT-5/16" BLK

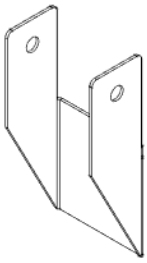

A4M04508 (x1) RAFTER BRACKET

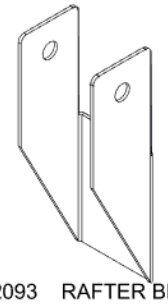

A4M02093 (x8) RAFTER BRACKET

- INSERT T-NUTS FIRST.
- HAND TIGHTEN ONLY.

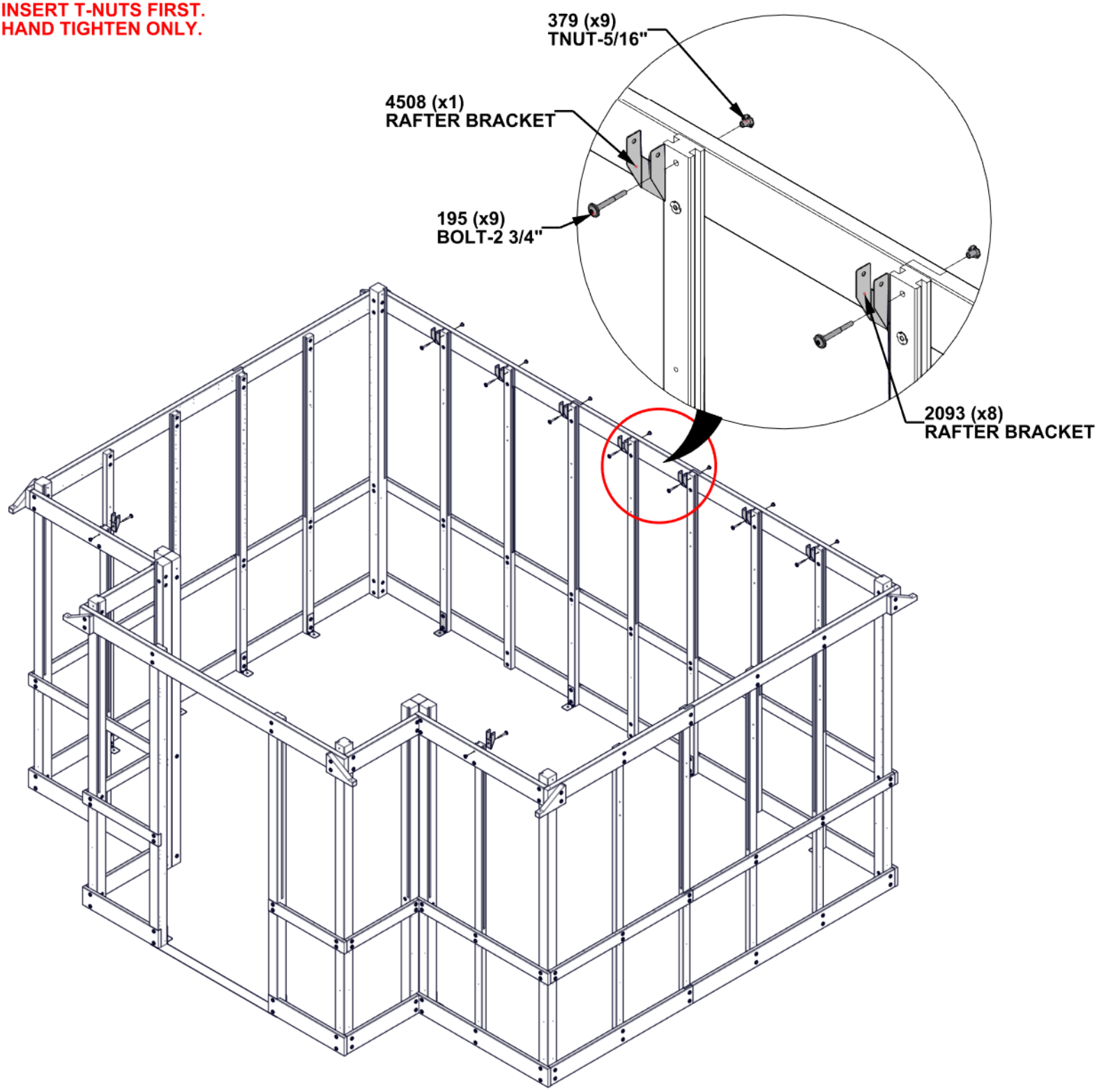

STEP 28 - GREENHOUSE ASSEMBLY

IMPORTANT!

STARTING WITH THE SIDE WALL ASSEMBLY, THE FOLLOWING STEPS ARE CRITICAL:
- POSTS AND UPRIGHTS ARE PLUMB (STRAIGHT UP AND DOWN) WITH A LEVEL.
- MEASUREMENTS BETWEEN POSTS AND UPRIGHTS ARE AS SHOWN +/- 1/8".
- RUNNING AND BASE BOARDS ARE SQUARED TO THE UPRIGHTS.
- ALL HARDWARE ON THIS SIDE IS FULLY TIGHTENED.

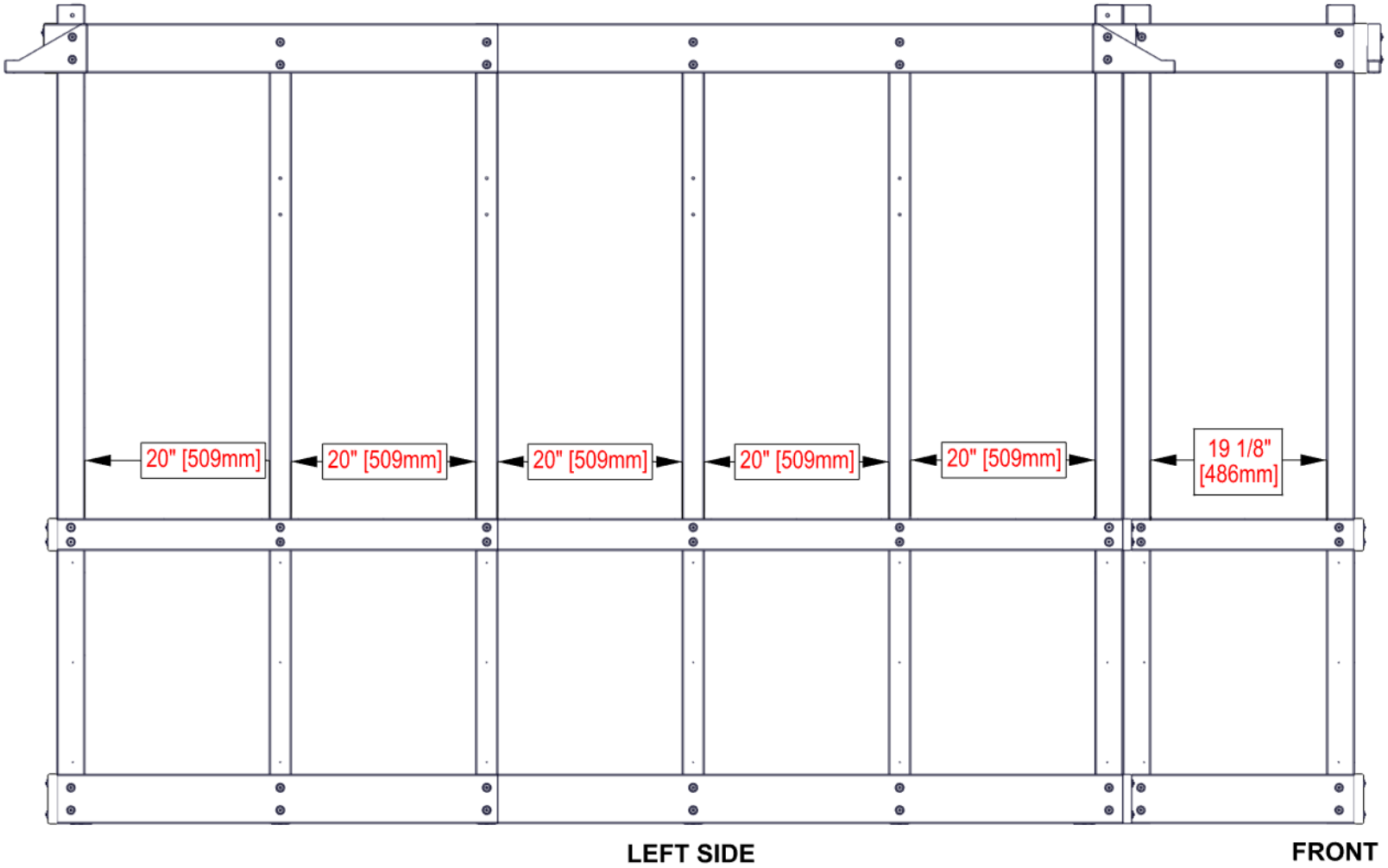

STEP 29 - GREENHOUSE ASSEMBLY

IMPORTANT!

ON THE BACK WALL ASSEMBLY, THE FOLLOWING STEPS ARE CRITICAL:
- POSTS AND UPRIGHTS ARE PLUMB (STRAIGHT UP AND DOWN) WITH A LEVEL.
- MEASUREMENTS BETWEEN POSTS AND UPRIGHTS ARE AS SHOWN +/- 1/8".
- RUNNING AND BASE BOARDS ARE SQUARED TO THE UPRIGHTS.
- ALL HARDWARE ON THIS SIDE IS FULLY TIGHTENED.

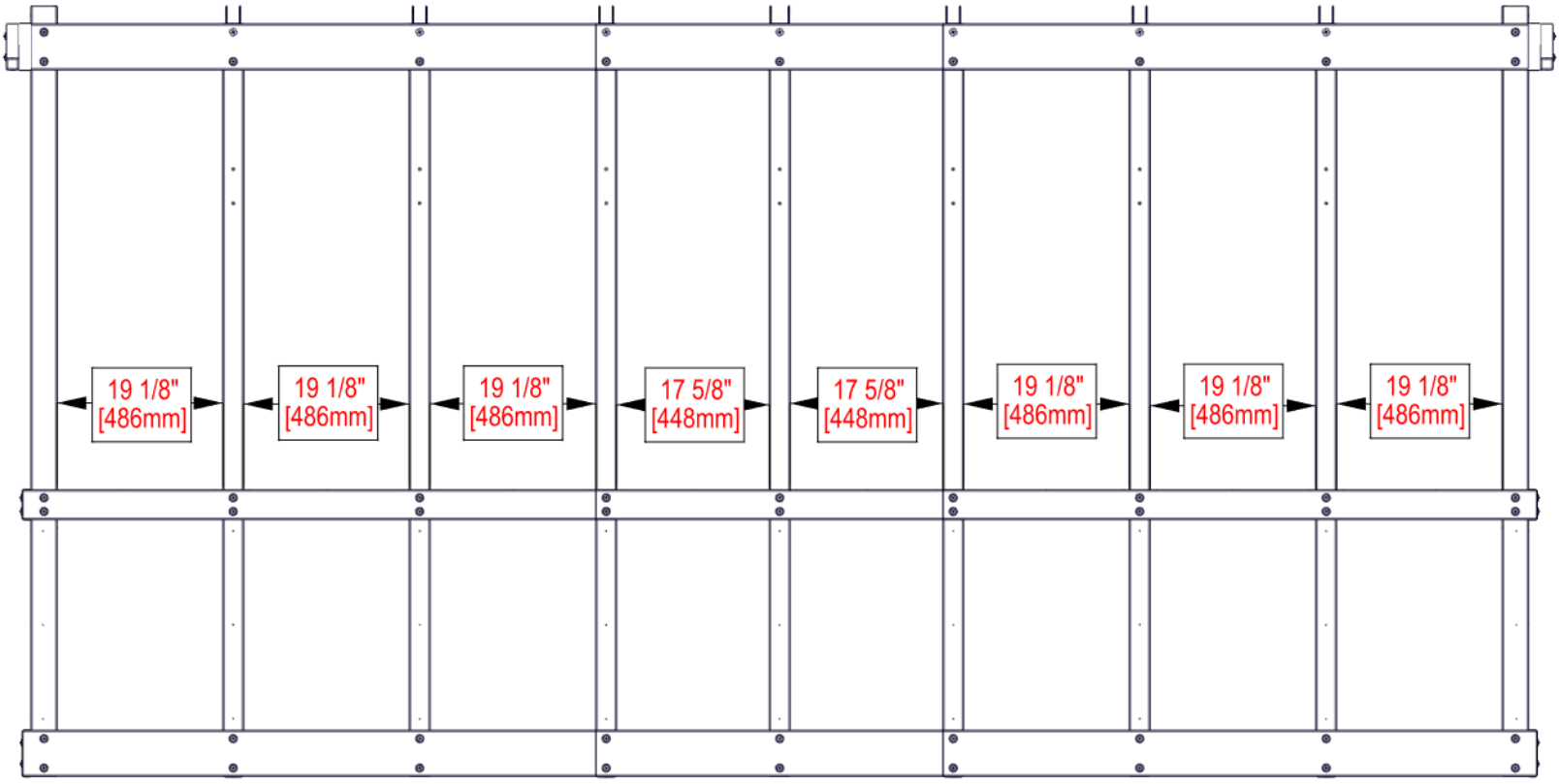

BACK

STEP 30 - GREENHOUSE ASSEMBLY

IMPORTANT!

ON THE REMAINING SIDE WALL ASSEMBLY, THE FOLLOWING STEPS ARE CRITICAL:
- POSTS AND UPRIGHTS ARE PLUMB (STRAIGHT UP AND DOWN) WITH A LEVEL.
- MEASUREMENTS BETWEEN POSTS AND UPRIGHTS ARE AS SHOWN +/- 1/8".
- RUNNING AND BASE BOARDS ARE SQUARED TO THE UPRIGHTS.
- ALL HARDWARE ON THIS SIDE IS FULLY TIGHTENED.

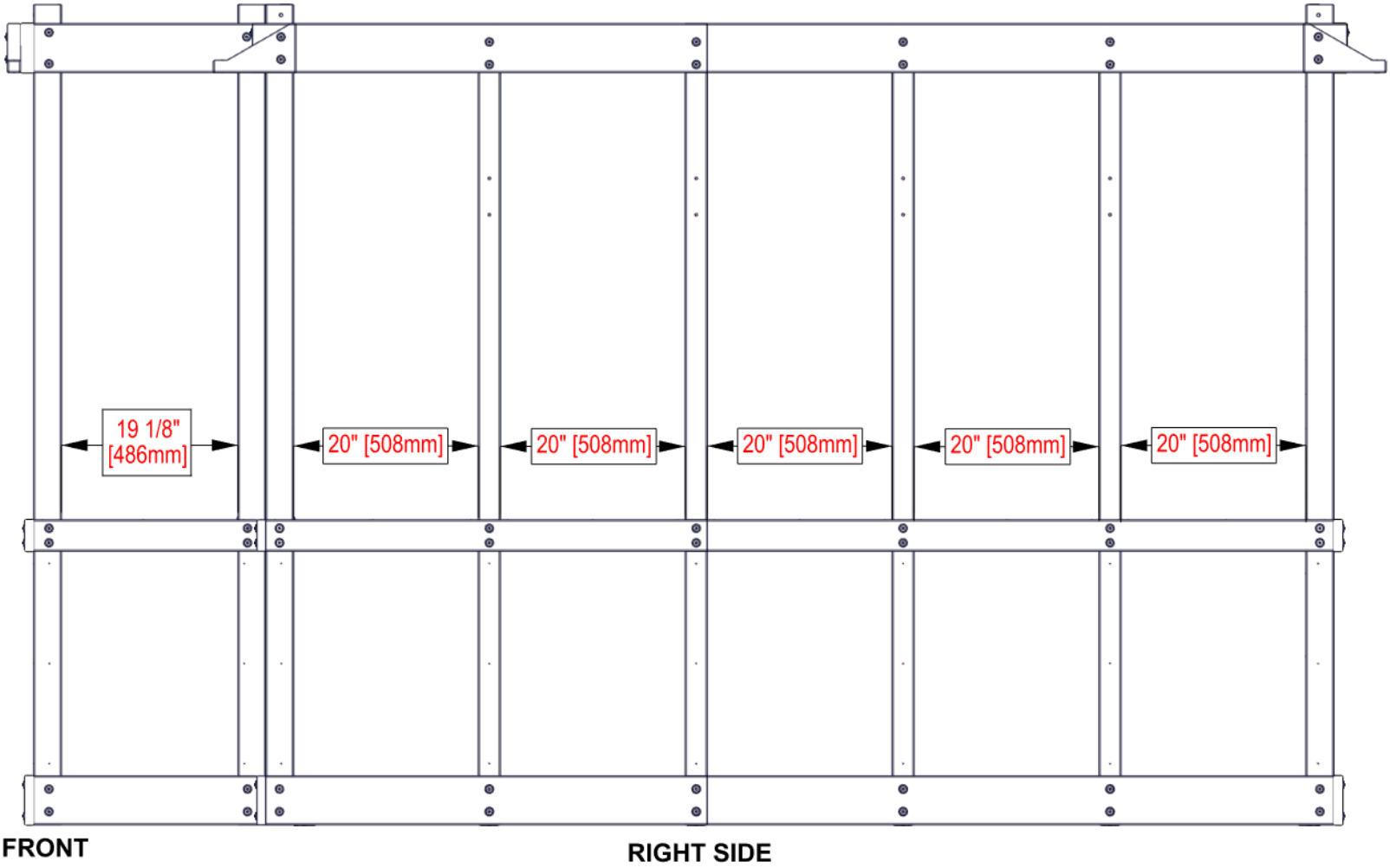

STEP 31 - GREENHOUSE ASSEMBLY

IMPORTANT!

ON THE FRONT WALL ASSEMBLY, THE FOLLOWING STEPS ARE CRITICAL:
- POSTS AND UPRIGHTS ARE PLUMB (STRAIGHT UP AND DOWN) WITH A LEVEL.
- MEASUREMENTS BETWEEN POSTS AND UPRIGHTS ARE AS SHOWN +/- 1/8".
- RUNNING AND BASE BOARDS ARE SQUARED TO THE UPRIGHTS.
- ALL HARDWARE ON THIS SIDE IS FULLY TIGHTENED.

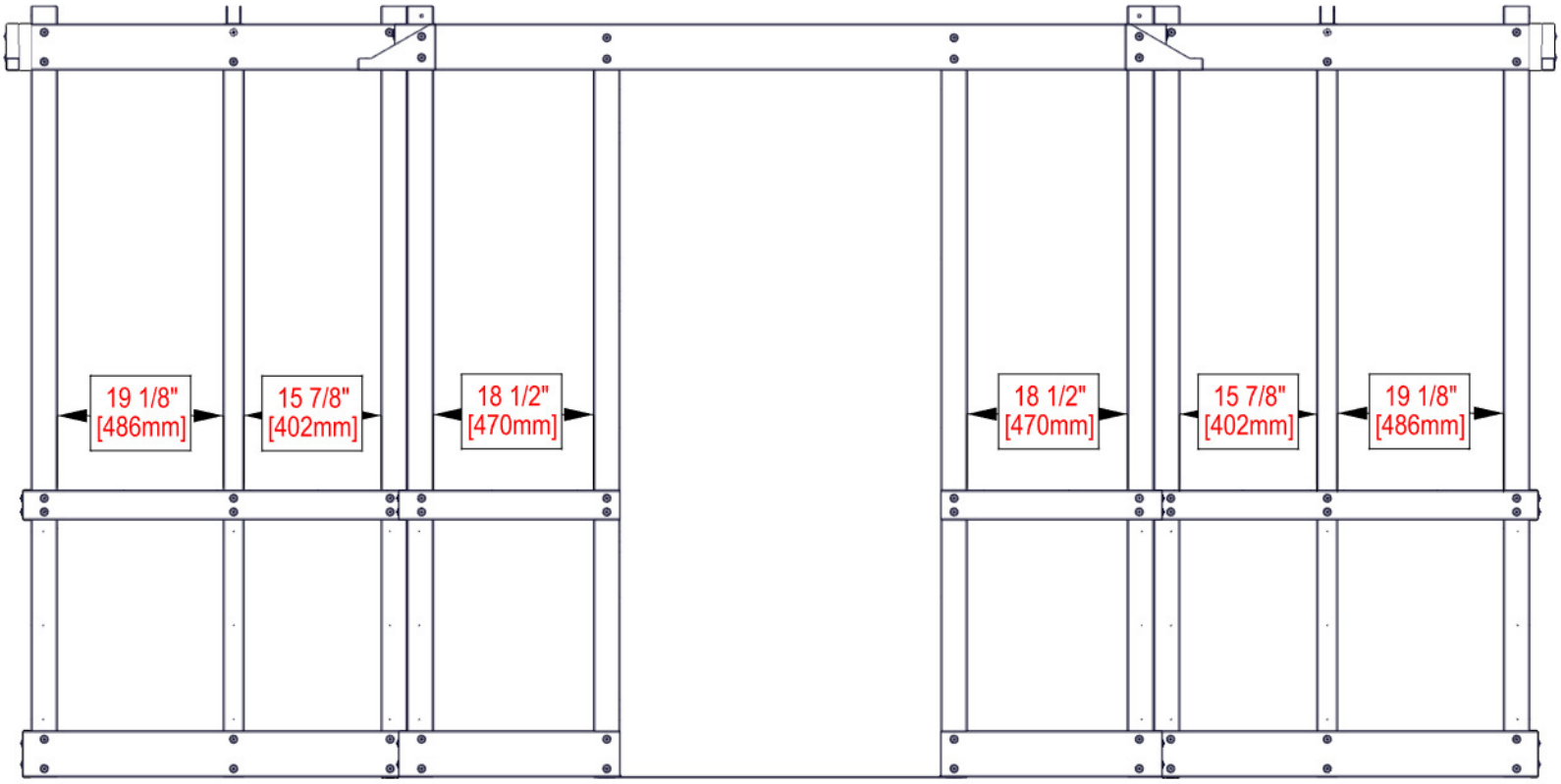

FRONT

STEP 32 - GREENHOUSE ASSEMBLY

CRITICAL: SQUARE ASSEMBLY BEFORE PROCEEDING TO NEXT STEPS.

WARNING: THERE WILL BE ALIGNMENT ISSUES IF THE STRUCTURE IS NOT PROPERLY SQUARED.

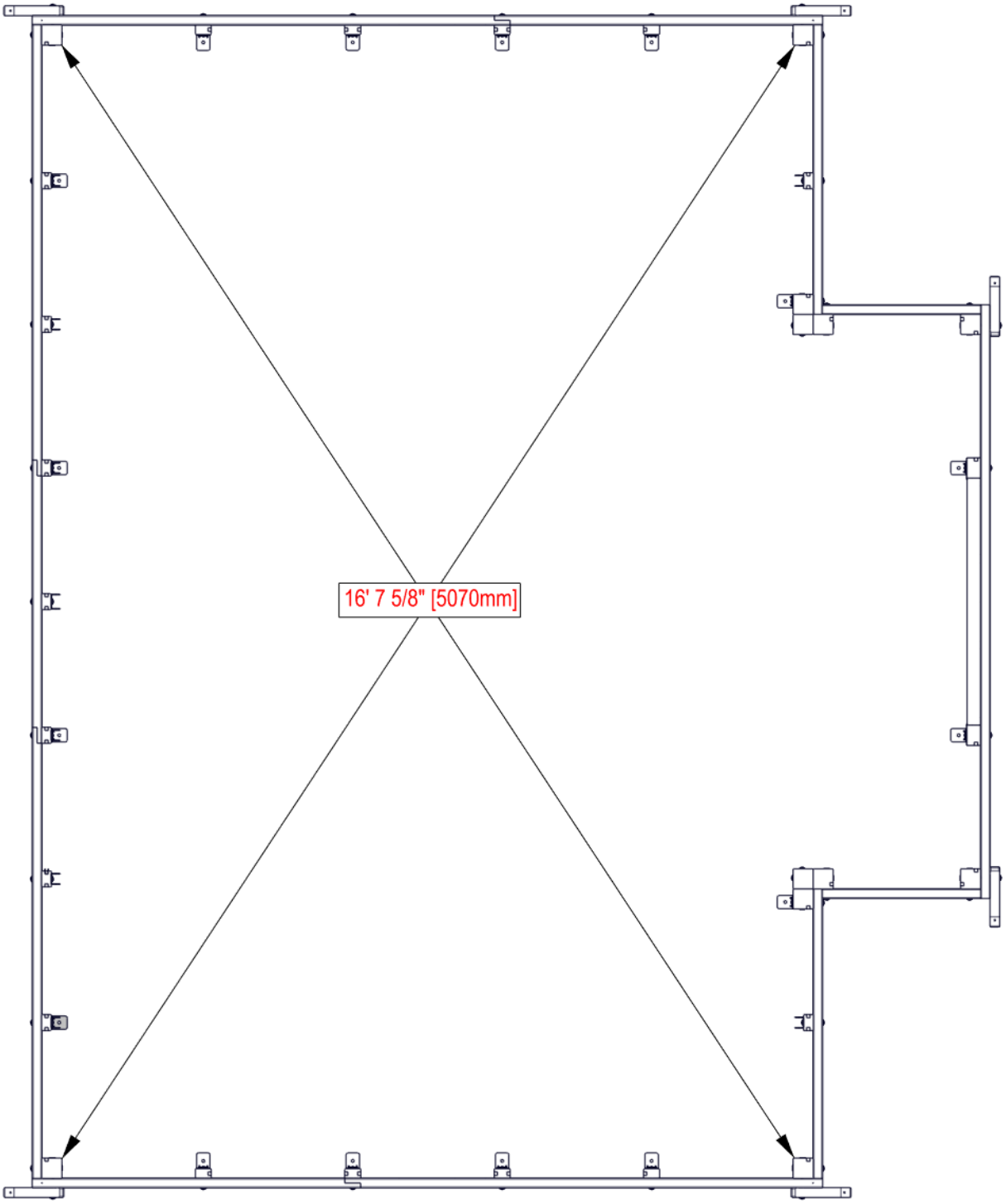

STEP 33 - SIDE WALL ASSEMBLY

QTY	PART NUMBER	DESCRIPTION
68	H100382	SCREW PFH 8x1 3/4 BLK

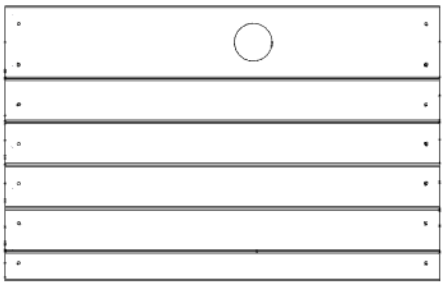

WP03 (x1) WALL PANEL - W2A04515
1 1/16"x19 15/16"x31 9/16" (27x507x802)

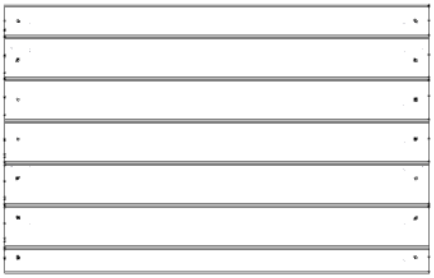

WP04 (x3) WALL PANEL - W2A04516
1 1/16"x19 15/16"x31 9/16" (27x507x802)

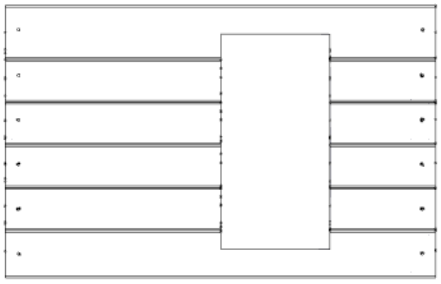

WP05 (x1) WALL PANEL - W2A04527
1 1/16"x19 15/16"x31 9/16" (27x507x802)

- TOP OF PANELS SHOULD BE FLUSH WITH TOP OF RUNNING BOARD.
- CENTER BETWEEN POSTS AND UPRIGHTS.
- ATTACH AS SHOWN.

382 (x68)
SCREW - 1 3/4"

ENSURE WP05 IS ORIENTATED CORRECTLY WITH OPENING TOWARD THE BOTTOM.

NOTE HOLE IN WP03 FOR CORRECT ORIENTATION

FRONT

WP05 (x1) WALL PANEL

WP03 (x1) WALL PANEL

WP04 (x3) WALL PANEL

ONLY LEFT SIDE OF GREENHOUSE SHOWN FOR DETAIL.

STEP 34 - BACK WALL ASSEMBLY

QTY	PART NUMBER	DESCRIPTION
96	H100382	SCREW PFH 8x1 3/4 BLK

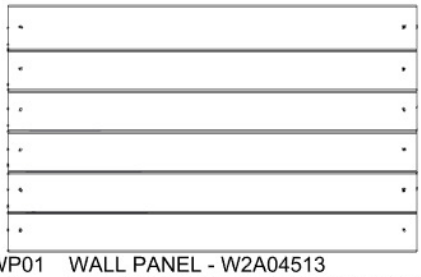

WP01 (x6) WALL PANEL - W2A04513
1 1/16"x19 1/16"x31 9/16" (27x484x802)

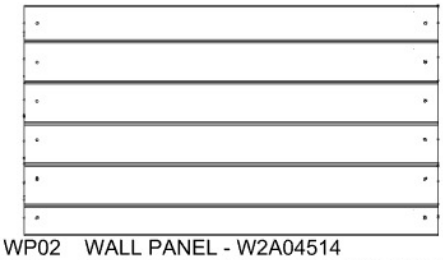

WP02 (x2) WALL PANEL - W2A04514
1 1/16"x17 9/16"x31 9/16" (27x446x802)

- TOP OF PANELS SHOULD BE FLUSH WITH TOP OF RUNNING BOARD.
- CENTER BETWEEN POSTS AND UPRIGHTS.
- ATTACH AS SHOWN.

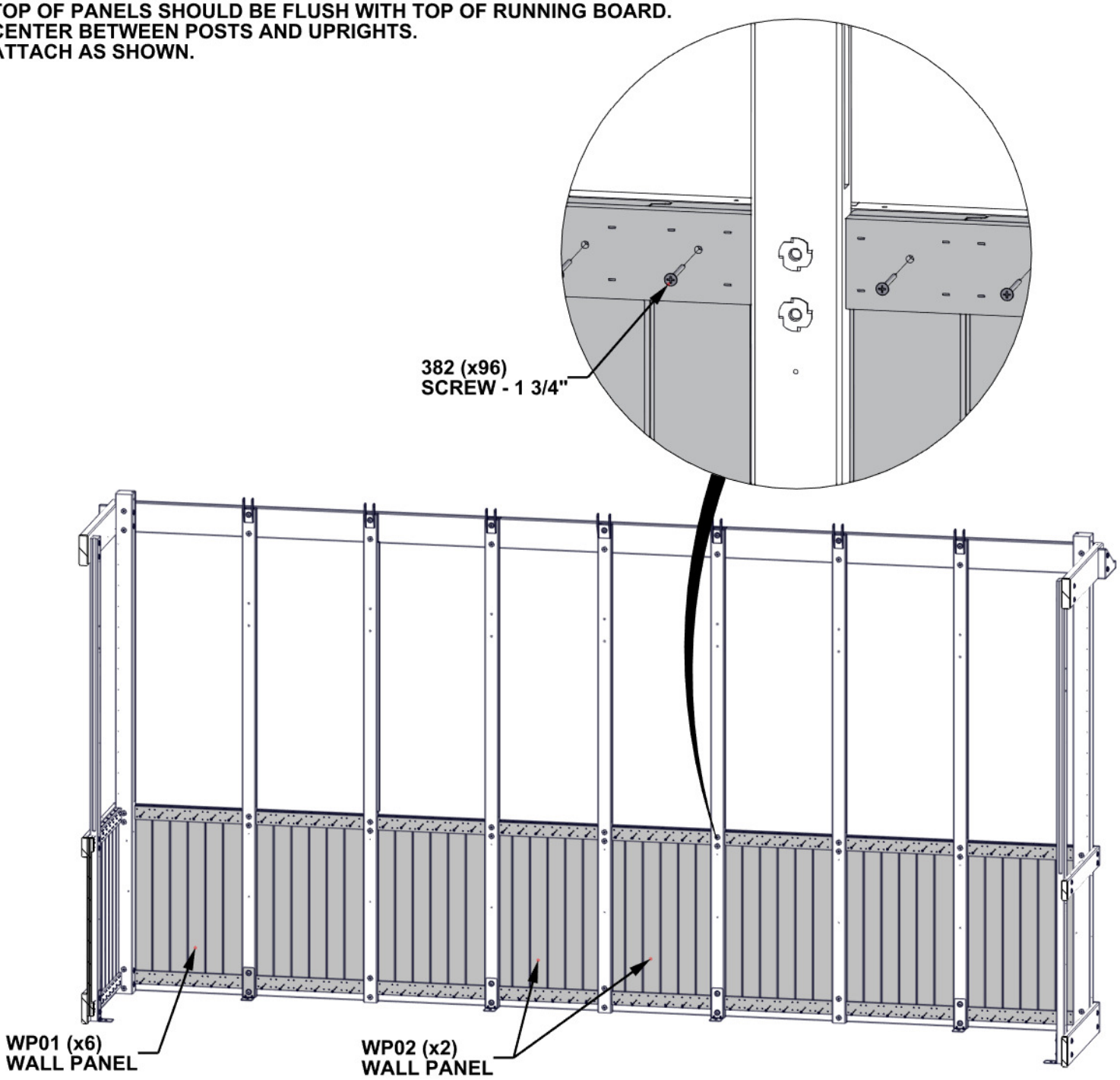

ONLY BACK OF GREENHOUSE SHOWN FOR DETAIL.

STEP 35 - SIDE WALL ASSEMBLY

QTY	PART NUMBER	DESCRIPTION
68	H100382	SCREW PFH 8x1 3/4 BLK

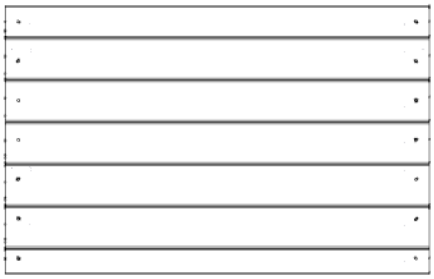

WP04 (x3) WALL PANEL - W2A04516
1 1/16"x19 15/16"x31 9/16" (27x507x802)

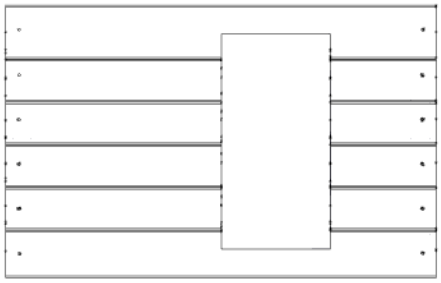

WP05 (x1) WALL PANEL - W2A04527
1 1/16"x19 15/16"x31 9/16" (27x507x802)

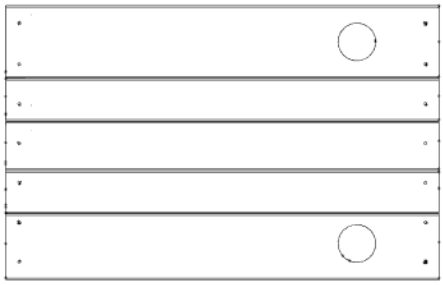

WP08 (x1) WALL PANEL - W2A04539
1 1/16"x19 15/16"x31 9/16" (27x507x802)

- TOP OF PANELS SHOULD BE FLUSH WITH TOP OF RUNNING BOARD.
- CENTER BETWEEN POSTS AND UPRIGHTS.
- ATTACH AS SHOWN.

382 (x68)
SCREW - 1 3/4"

NOTE HOLES IN WP08 FOR CORRECT ORIENTATION

ENSURE WP05 IS ORIENTATED CORRECTLY WITH OPENING TOWARD THE BOTTOM.

FRONT

WP04 (x3)
WALL PANEL

WP08 (x1)
WALL PANEL

ONLY RIGHT SIDE OF GREENHOUSE SHOWN FOR DETAIL.

WP05 (x1)
WALL PANEL

STEP 36 - FRONT WALL ASSEMBLY

QTY	PART NUMBER	DESCRIPTION
44	H100382	SCREW PFH 8x1 3/4 BLK

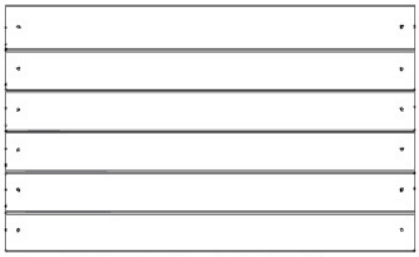

WP01 (x2) WALL PANEL - W2A04513
1 1/16"x19 1/16"x31 9/16" (27x484x802)

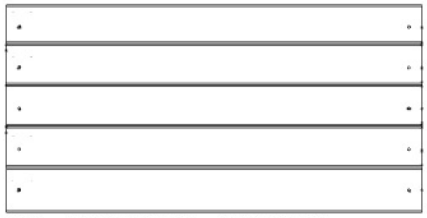

WP06 (x2) WALL PANEL - W2A04528
1 1/16"x15 3/4"x31 9/16" (27x400x802)

- TOP OF PANELS SHOULD BE FLUSH WITH TOP OF RUNNING BOARD.
- CENTER BETWEEN POSTS AND UPRIGHTS.
- ATTACH AS SHOWN.

382 (x44)
SCREW - 1 3/4"

ONLY FRONT OF GREENHOUSE
SHOWN FOR DETAIL.

WP06 (x1)
WALL PANEL

WP01 (x1)
WALL PANEL

WP06 (x1)
WALL PANEL

WP01 (x1)
WALL PANEL

STEP 37 - FRONT WALL ASSEMBLY

QTY	PART NUMBER	DESCRIPTION
48	H100382	SCREW PFH 8x1 3/4 BLK

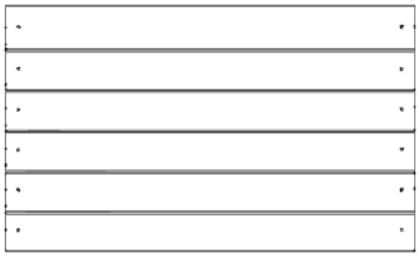

WP01 (x2) WALL PANEL - W2A04513
1 1/16"x19 1/16"x31 9/16" (27x484x802)

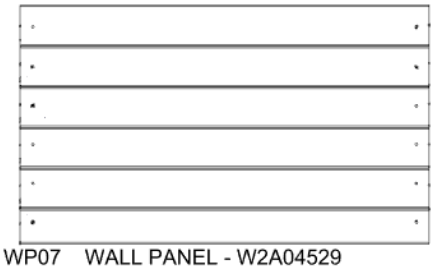

WP07 (x2) WALL PANEL - W2A04529
1 1/16"x18 3/8"x31 9/16" (27x468x802)

- TOP OF PANELS SHOULD BE FLUSH WITH TOP OF RUNNING BOARD.
- CENTER BETWEEN POSTS AND UPRIGHTS.
- ATTACH AS SHOWN.

382 (x48)
SCREW - 1 3/4"

WP01 (x2)
WALL PANEL

WP07 (x2)
WALL PANEL

ONLY FRONT OF GREENHOUSE
SHOWN FOR DETAIL.

STEP 38 - WINDOW SILL ASSEMBLY

QTY	PART NUMBER	DESCRIPTION
15	H100391	SCREW PFH 8x2 BLK

AJ02 WINDOW SILL - W4L20908
(x1) 1 7/16"x4"x24 3/16" (36x102x615)

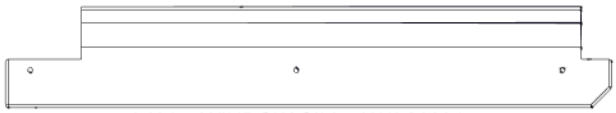

AJ01 WINDOW SILL - W4L20901
(x1) 1 7/16"x4"x24 3/16" (36x102x615)

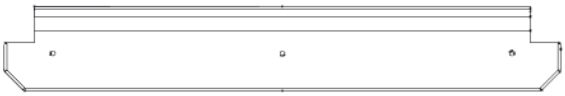

E05 WINDOW SILL - W4L20879
(x3) 1 7/16"x3 3/8"x22 3/8" (36x86x569)

ATTACH WINDOW SILLS USING PILOT HOLES IN RUNNING BOARD.

AJ01 (x1) WINDOW SILL

E05 (x3) WINDOW SILL

AJ02 (x1) WINDOW SILL

391 (x15) SCREW - 2"

STEP 39 - WINDOW SILL ASSEMBLY

QTY	PART NUMBER	DESCRIPTION
24	H100391	SCREW PFH 8x2 BLK

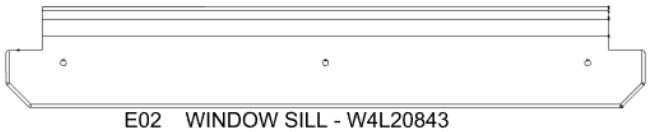

E02 WINDOW SILL - W4L20843
(x4) 1 7/16"x3 3/8"x21 1/2" (36x86x546)

E01 WINDOW SILL - W4L20842
(x1) 1 7/16"x3 3/8"x25 1/4" (36x86x642)

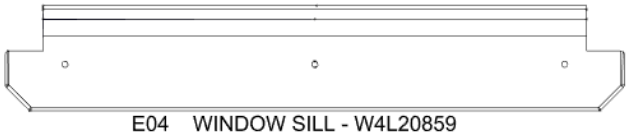

E04 WINDOW SILL - W4L20859
(x2) 1 7/16"x3 3/8"x20" (36x86x508)

E03 WINDOW SILL - W4L20844
(x1) 1 7/16"x3 3/8"x25 1/4" (36x86x642)

ATTACH WINDOW SILLS USING PILOT HOLES IN RUNNING BOARD.

E03 (x1) WINDOW SILL

E02 (x4) WINDOW SILL

E04 (x2) WINDOW SILL

E01 (x1) WINDOW SILL

391 (x24) SCREW - 2"

STEP 40 - WINDOW SILL ASSEMBLY

QTY	PART NUMBER	DESCRIPTION
15	H100391	SCREW PFH 8x2 BLK

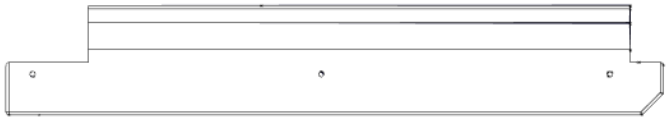

AJ01 WINDOW SILL - W4L20901
(x1) 1 7/16"x4"x24 3/16" (36x102x615)

AJ02 WINDOW SILL - W4L20908
(x1) 1 7/16"x4"x24 3/16" (36x102x615)

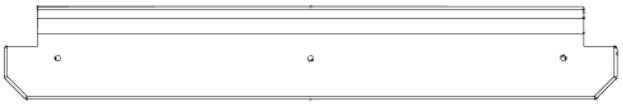

E05 WINDOW SILL - W4L20879
(x3) 1 7/16"x3 3/8"x22 3/8" (36x86x569)

ATTACH WINDOW SILLS USING PILOT HOLES IN RUNNING BOARD.

AJ02 (x1) WINDOW SILL

E05 (x3) WINDOW SILL

AJ01 (x1) WINDOW SILL

391 (x15) SCREW - 2"

STEP 41 - WINDOW SILL ASSEMBLY

QTY	PART NUMBER	DESCRIPTION
12	H100391	SCREW PFH 8x2 BLK

E01 WINDOW SILL - W4L20842
(x1) 1 7/16"x3 3/8"x25 1/4" (36x86x642)

E09 WINDOW SILL - W4L20932
(x1) 1 7/16"x3 3/8"x25 1/16" (36x86x636)

E07 WINDOW SILL - W4L20930
(x1) 1 7/16"x3 3/8"x23 3/8" (36x86x594)

E11 WINDOW SILL - W4L20934
(x1) 1 7/16"x3 3/8"x19 15/16" (36x86x506)

ATTACH WINDOW SILLS USING PILOT HOLES IN RUNNING BOARD.

E07 (x1) WINDOW SILL

E09 (x1) WINDOW SILL

E01 (x1) WINDOW SILL

E11 (x1) WINDOW SILL

391 (x12) SCREW - 2"

STEP 42 - WINDOW SILL ASSEMBLY

QTY	PART NUMBER	DESCRIPTION
12	H100391	SCREW PFH 8x2 BLK

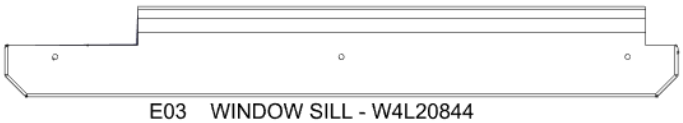

E03 WINDOW SILL - W4L20844
(x1) 1 7/16"x3 3/8"x25 1/4" (36x86x642)

E10 WINDOW SILL - W4L20933
(x1) 1 7/16"x3 3/8"x25 1/16" (36x86x636)

E08 WINDOW SILL - W4L20931
(x1) 1 7/16"x3 3/8"x23 3/8" (36x86x594)

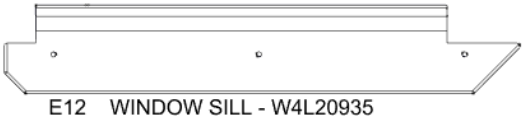

E12 WINDOW SILL - W4L20935
(x1) 1 7/16"x3 3/8"x19 15/16" (36x86x506)

ATTACH WINDOW SILLS USING PILOT HOLES IN RUNNING BOARD.

E03 (x1) WINDOW SILL

E12 (x1) WINDOW SILL

E08 (x1) WINDOW SILL

E10 (x1) WINDOW SILL

391 (x12) SCREW - 2"

STEP 43 - COVER BOARD ASSEMBLY

QTY	PART NUMBER	DESCRIPTION
18	H100200	SCREW PFH 8x1 1/2 BLK

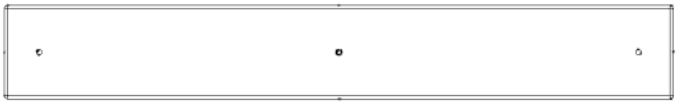

M01 COVER BOARD - W4L20846
(x6) 5/8"x3 3/8"x24 3/16" (16x86x614)

- ALIGN THROUGH HOLES IN COVER BOARDS WITH PILOT HOLES IN POSTS AND UPRIGHTS.
- ATTACH AS SHOWN.

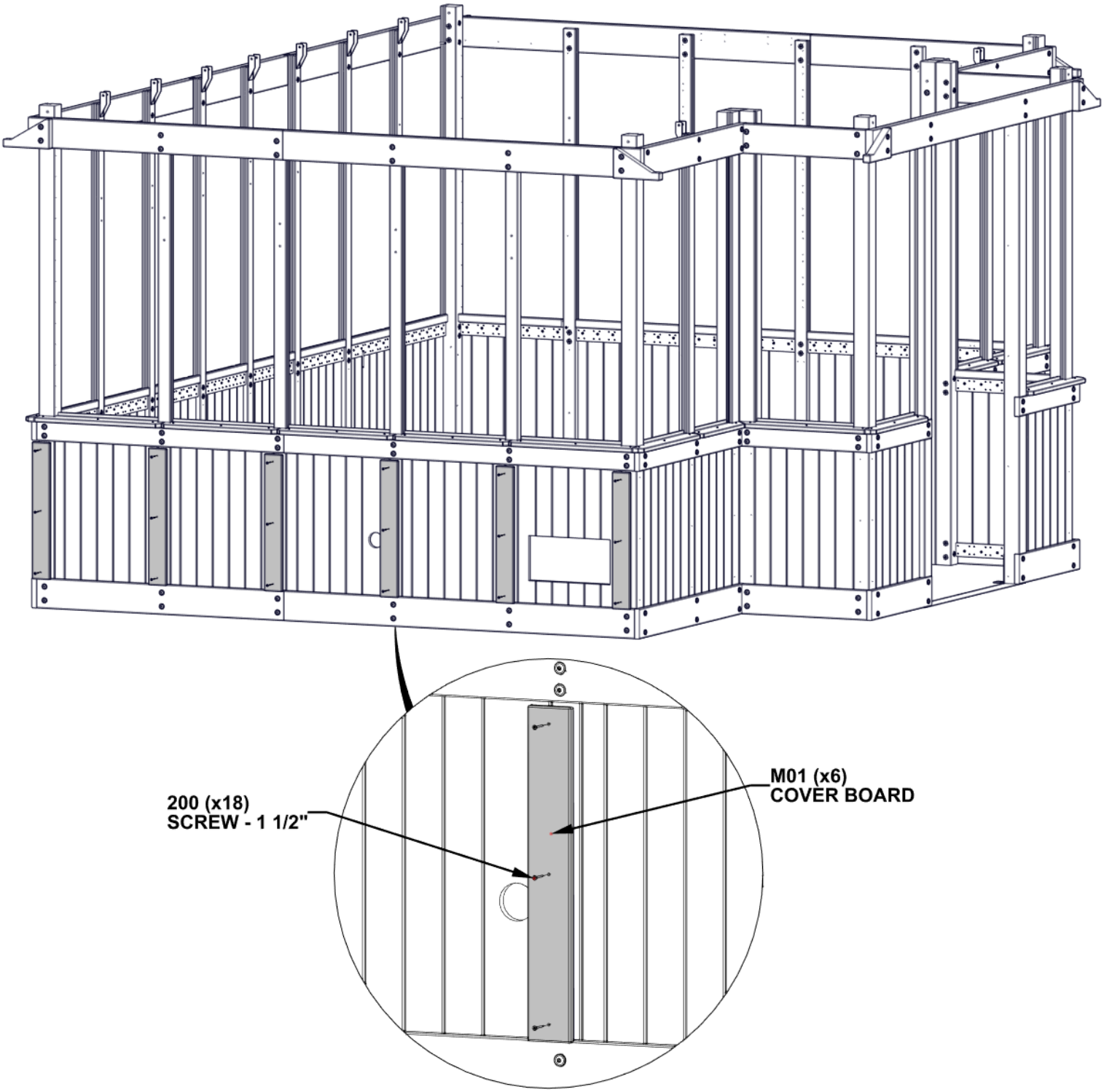

STEP 44 - COVER BOARD ASSEMBLY

QTY	PART NUMBER	DESCRIPTION
27	H100200	SCREW PFH 8x1 1/2 BLK

M01 COVER BOARD - W4L20846
(x7) 5/8"x3 3/8"x24 3/16" (16x86x614)

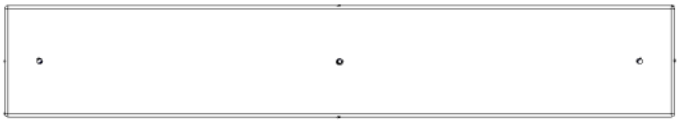

Y01 COVER BOARD - W4L20847
(x2) 5/8"x4"x24 3/16" (16x102x614)

- ALIGN THROUGH HOLES IN COVER BOARDS WITH PILOT HOLES IN POSTS AND UPRIGHTS.
- ATTACH AS SHOWN.

Y01 (x1)
COVER BOARD

Y01 (x1)
COVER BOARD

200 (x27)
SCREW - 1 1/2"

M01 (x7)
COVER BOARD

STEP 45 - COVER BOARD ASSEMBLY

QTY	PART NUMBER	DESCRIPTION
18	H100200	SCREW PFH 8x1 1/2 BLK

M01 COVER BOARD - W4L20846
(x6) 5/8"x3 3/8"x24 3/16" (16x86x614)

- ALIGN THROUGH HOLES IN COVER BOARDS WITH PILOT HOLES IN POSTS AND UPRIGHTS.
- ATTACH AS SHOWN.

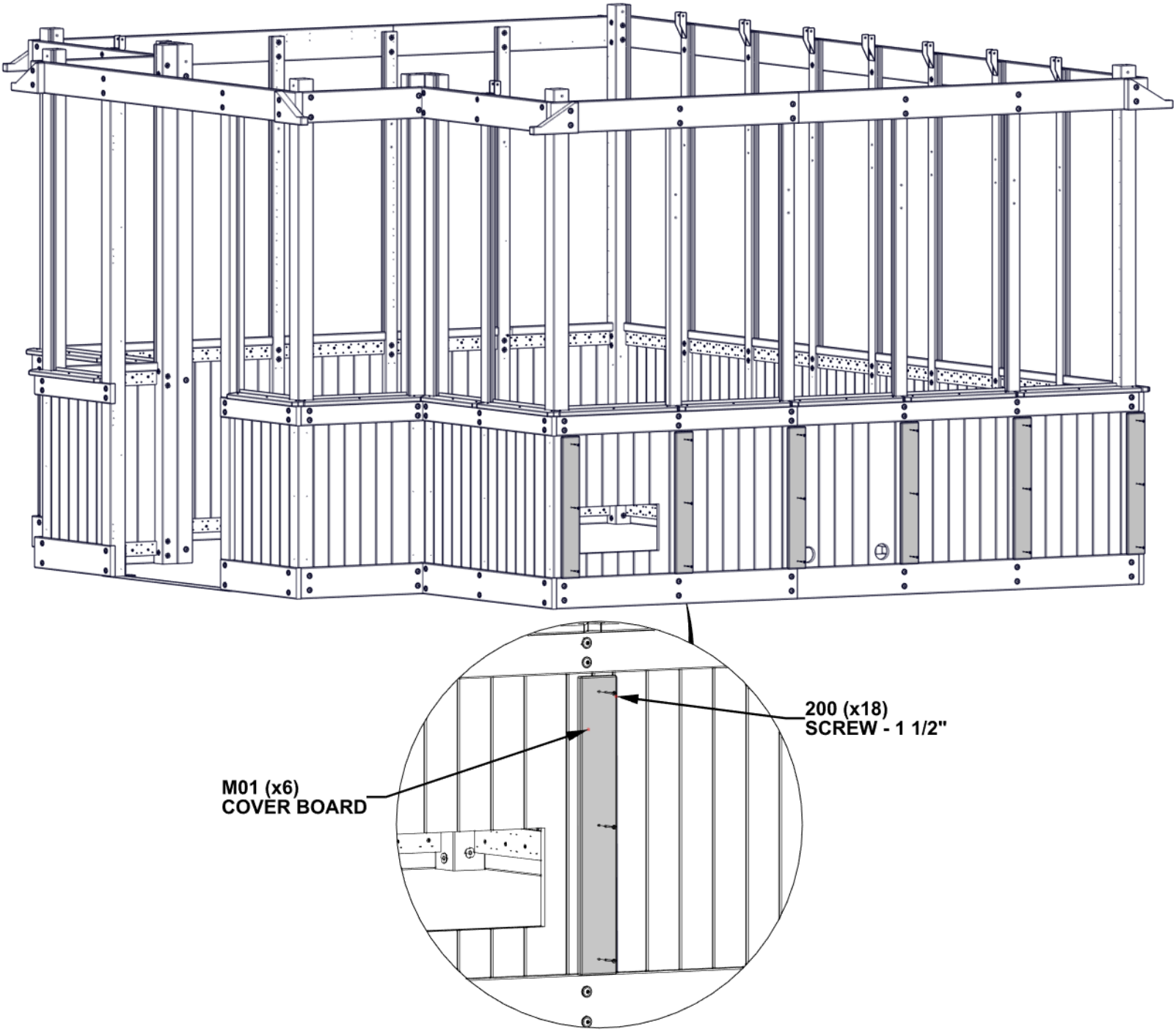

STEP 46 - COVER BOARD ASSEMBLY

QTY	PART NUMBER	DESCRIPTION
18	H100200	SCREW PFH 8x1 1/2 BLK

M01 COVER BOARD - W4L20846
(x2) 5/8"x3 3/8"x24 3/16" (16x86x614)

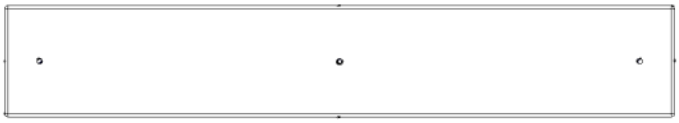

Y01 COVER BOARD - W4L20847
(x4) 5/8"x4"x24 3/16" (16x102x614)

- ALIGN THROUGH HOLES IN COVER BOARDS WITH PILOT HOLES IN POSTS AND UPRIGHTS.
- ATTACH AS SHOWN.

Y01 (x1) COVER BOARD

Y01 (x1) COVER BOARD

M01 (x1) COVER BOARD

M01 (x1) COVER BOARD

Y01 (x1) COVER BOARD

Y01 (x1) COVER BOARD

200 (x18) SCREW - 1 1/2"

STEP 47 - COVER BOARD ASSEMBLY

QTY	PART NUMBER	DESCRIPTION
6	H100200	SCREW PFH 8x1 1/2 BLK

M01 COVER BOARD - W4L20846
(x2) 5/8"x3 3/8"x24 3/16" (16x86x614)

- ALIGN THROUGH HOLES IN COVER BOARDS WITH PILOT HOLES IN POSTS AND UPRIGHTS.
- ATTACH AS SHOWN.

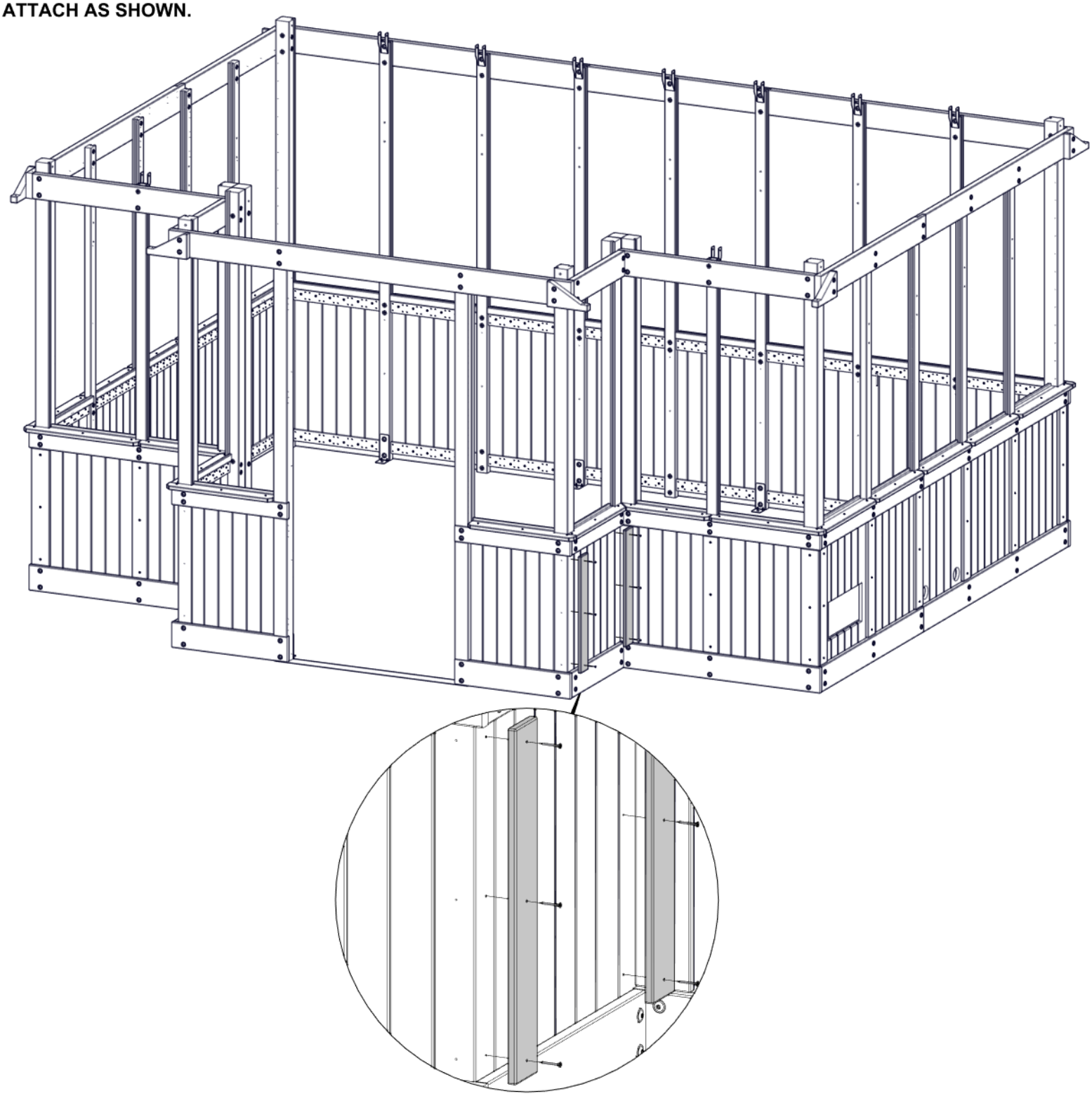

STEP 48 - COVER BOARD ASSEMBLY

QTY	PART NUMBER	DESCRIPTION
6	H100200	SCREW PFH 8x1 1/2 BLK

M01 COVER BOARD - W4L20846
(x2) 5/8"x3 3/8"x24 3/16" (16x86x614)

- ALIGN THROUGH HOLES IN COVER BOARDS WITH PILOT HOLES IN POSTS AND UPRIGHTS.
- ATTACH AS SHOWN.

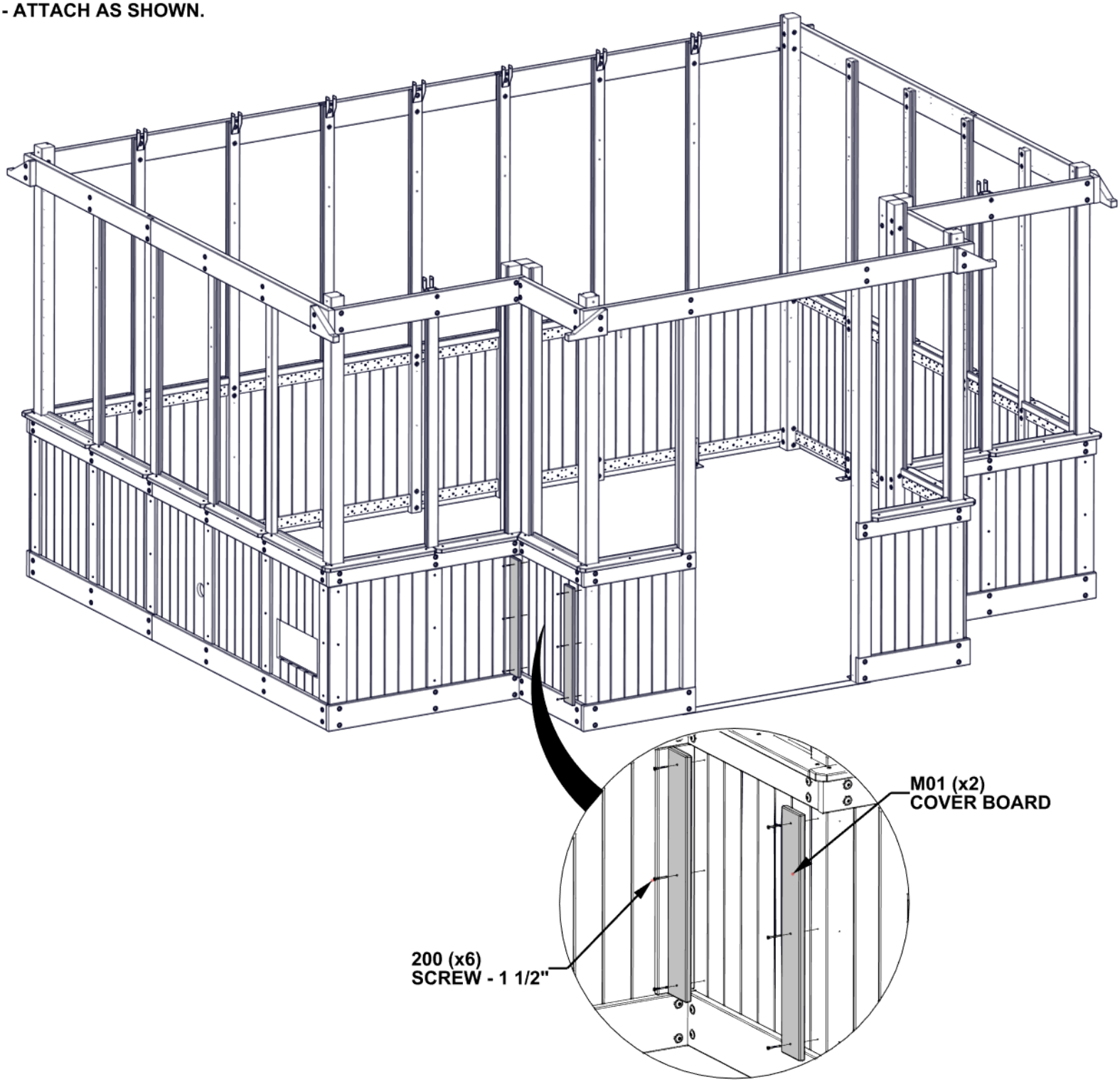

STEP 49 - COVER BOARD ASSEMBLY

QTY	PART NUMBER	DESCRIPTION
6	H100200	SCREW PFH 8x1 1/2 BLK
6	H100380	SCREW PFH 8x1 1/8 BLK

N14 COVER BOARD - W4L21462
(x2) 5/8"x2 3/8"x25" (16x60x614)

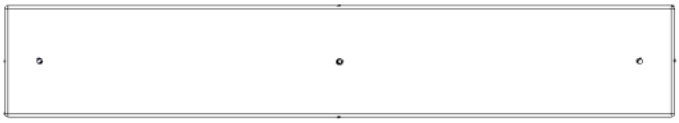

Y01 COVER BOARD - W4L20847
(x2) 5/8"x4"x24 3/16" (16x102x614)

- ALIGN THROUGH HOLES IN COVER BOARDS WITH PILOT HOLES IN POSTS AND UPRIGHTS.
- ATTACH AS SHOWN.

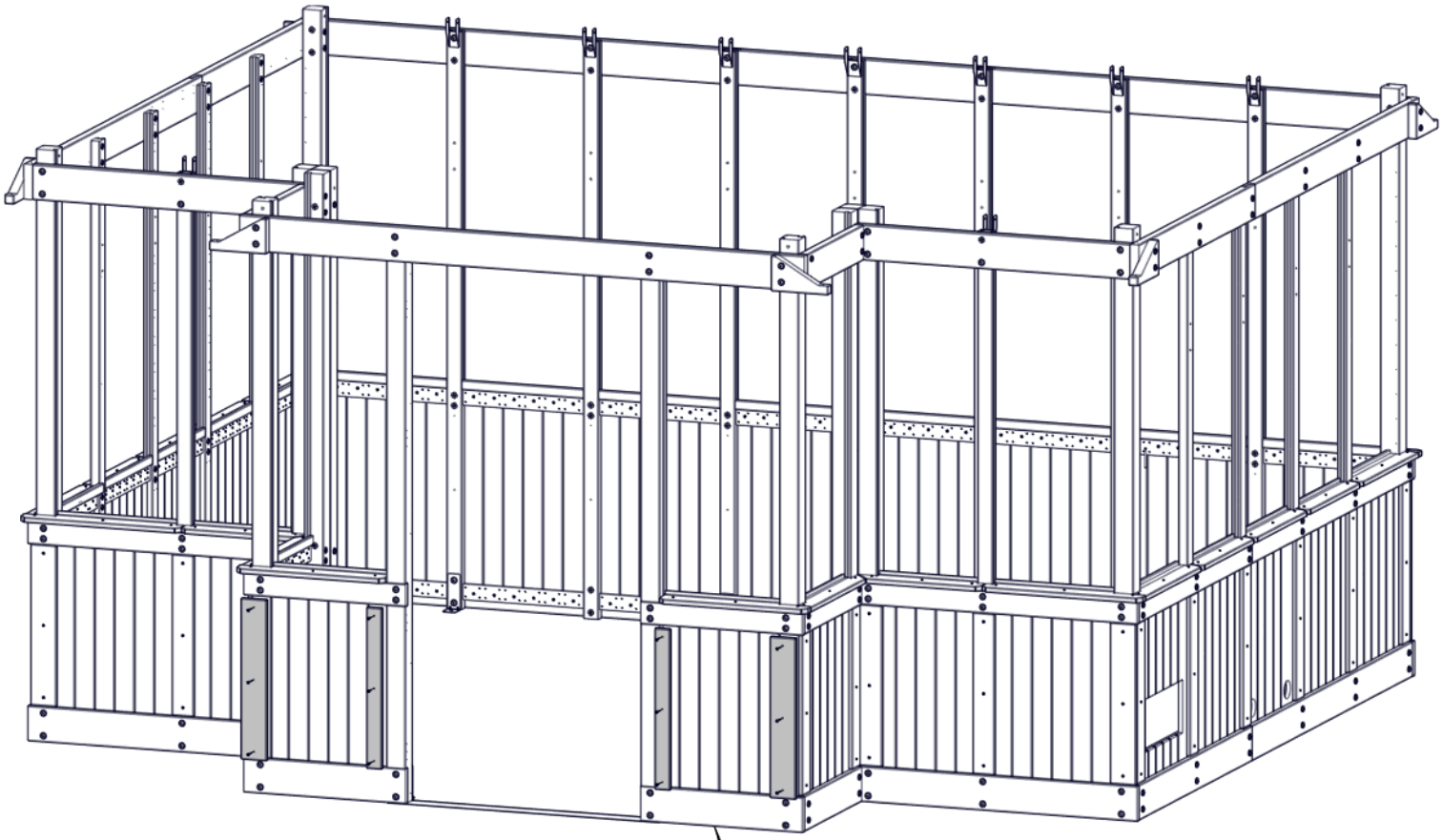

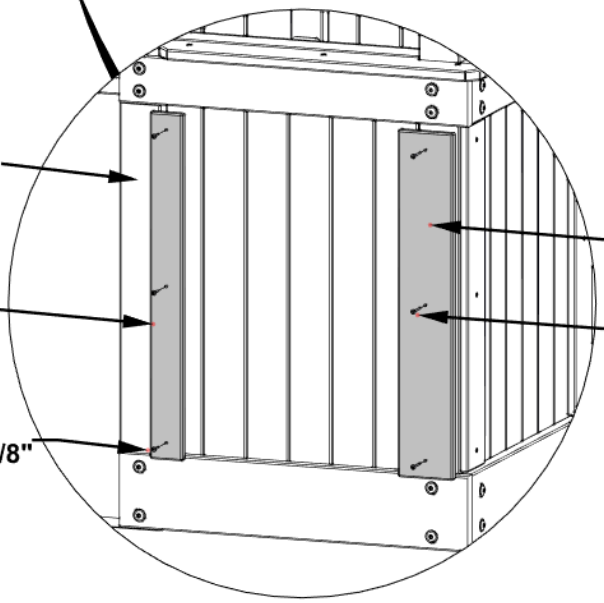

STEP 50 - VENT ASSEMBLY

QTY	PART NUMBER	DESCRIPTION
6	H100392	SCREW PWH 8x3/4 BLK

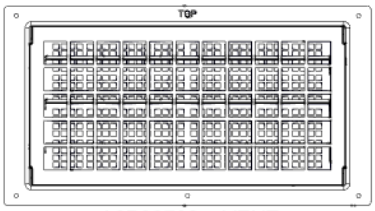

A6P00730 VENT
(x1)

- SLIDE VENT INTO OPENING.
- USE VENT FLANGE AS A GUIDE AND AN 1/8" [3mm] DRILL BIT TO CREATE PILOT HOLES INTO WALL PANEL.
- ATTACH AS SHOWN.
- DO NOT DRILL ALL THE WAY THROUGH THE WALL PANEL.

392 (x6)
SCREW - 3/4"

730 (x1)
VENT

STEP 51 - VENT ASSEMBLY

QTY	PART NUMBER	DESCRIPTION
6	H100392	SCREW PWH 8x3/4 BLK

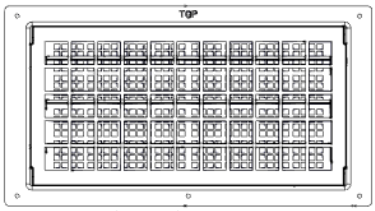

A6P00730 VENT
(x1)

- SLIDE VENT INTO OPENING.
- USE VENT FLANGE AS A GUIDE AND AN 1/8" [3mm] DRILL BIT TO CREATE PILOT HOLES INTO WALL PANEL.
- ATTACH AS SHOWN.
- DO NOT DRILL ALL THE WAY THROUGH THE WALL PANEL.

392 (x6)
SCREW - 3/4"

730 (x1)
VENT

STEP 52 - WINDOW ASSEMBLY

QTY	PART NUMBER	DESCRIPTION
8	H100391	SCREW PFH 8x2 BLK

F05 WINDOW FRAME - W4L20864
(x1) 1 7/16"x2 3/8"x19 15/16" (36x60x507)

F06 WINDOW FRAME - W4L20866
(x1) 1 7/16"x2 3/8"x19 15/16" (36x60x507)

ALIGN THROUGH HOLES IN F05 & F06 WITH PILOT HOLES IN HEADER.

F05 (x1)
WINDOW FRAME

F06 (x1)
WINDOW FRAME

391 (x8)
SCREW - 2"

NOTE PILOT HOLES IN F05 & F06
FOR CORRECT ORIENTATION.

FRONT

ONLY LEFT SIDE OF GREENHOUSE SHOWN FOR DETAIL.

STEP 53 - WINDOW ASSEMBLY

QTY	PART NUMBER	DESCRIPTION
8	H100391	SCREW PFH 8x2 BLK

F05 WINDOW FRAME - W4L20864
(x1) 1 7/16"x2 3/8"x19 15/16" (36x60x507)

F06 WINDOW FRAME - W4L20866
(x1) 1 7/16"x2 3/8"x19 15/16" (36x60x507)

ALIGN THROUGH HOLES IN F05 & F06 WITH PILOT HOLES IN HEADER.

F05 (x1)
WINDOW FRAME

F06 (x1)
WINDOW FRAME

391 (x8)
SCREW - 2"

NOTE PILOT HOLES IN F05 & F06
FOR CORRECT ORIENTATION.

FRONT

ONLY RIGHT SIDE OF GREENHOUSE SHOWN FOR DETAIL.

STEP 54 - WINDOW ASSEMBLY

QTY	PART NUMBER	DESCRIPTION
16	H100200	SCREW PFH 8x1 1/2 BLK

CB01 WINDOW TRIM - W4L20881
(x2) 5/8"x3"x51 3/8" (16x76x1305)

N01 WINDOW TRIM - W4L20865
(x2) 5/8"x2 3/8"x19 5/16" (16x60x491)

- NOTE NOTCHES FOR CORRECT ORIENTATION OF CB01 BOARDS.
- ALIGN THE 4 THROUGH HOLES IN CB01 WITH PILOT HOLES IN UPRIGHTS.
- ALIGN THROUGH HOLES IN N01 WITH PILOT HOLES IN BOARDS FROM STEP 52.
- ATTACH AS SHOWN.

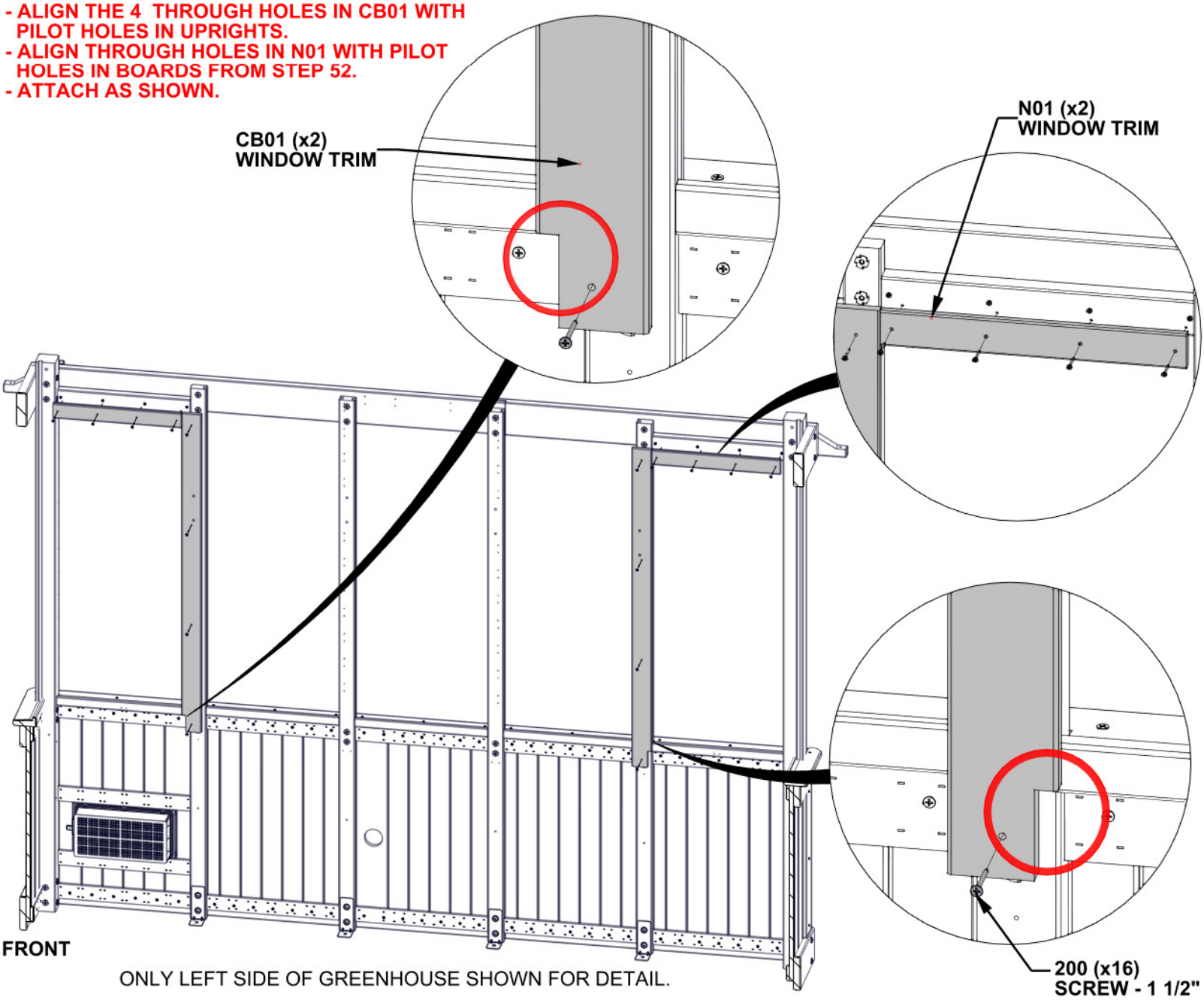

ONLY LEFT SIDE OF GREENHOUSE SHOWN FOR DETAIL.

STEP 55 - WINDOW ASSEMBLY

QTY	PART NUMBER	DESCRIPTION
16	H100200	SCREW PFH 8x1 1/2 BLK

CB01 WINDOW TRIM - W4L20881
(x2) 5/8"x3"x51 3/8" (16x76x1305)

N01 WINDOW TRIM - W4L20865
(x2) 5/8"x2 3/8"x19 5/16" (16x60x491)

- NOTE NOTCHES FOR CORRECT ORIENTATION OF CB01 BOARDS.
- ALIGN THE 4 THROUGH HOLES IN CB01 WITH PILOT HOLES IN UPRIGHTS.
- ALIGN THROUGH HOLES IN N01 WITH PILOT HOLES IN BOARDS FROM STEP 53.
- ATTACH AS SHOWN.

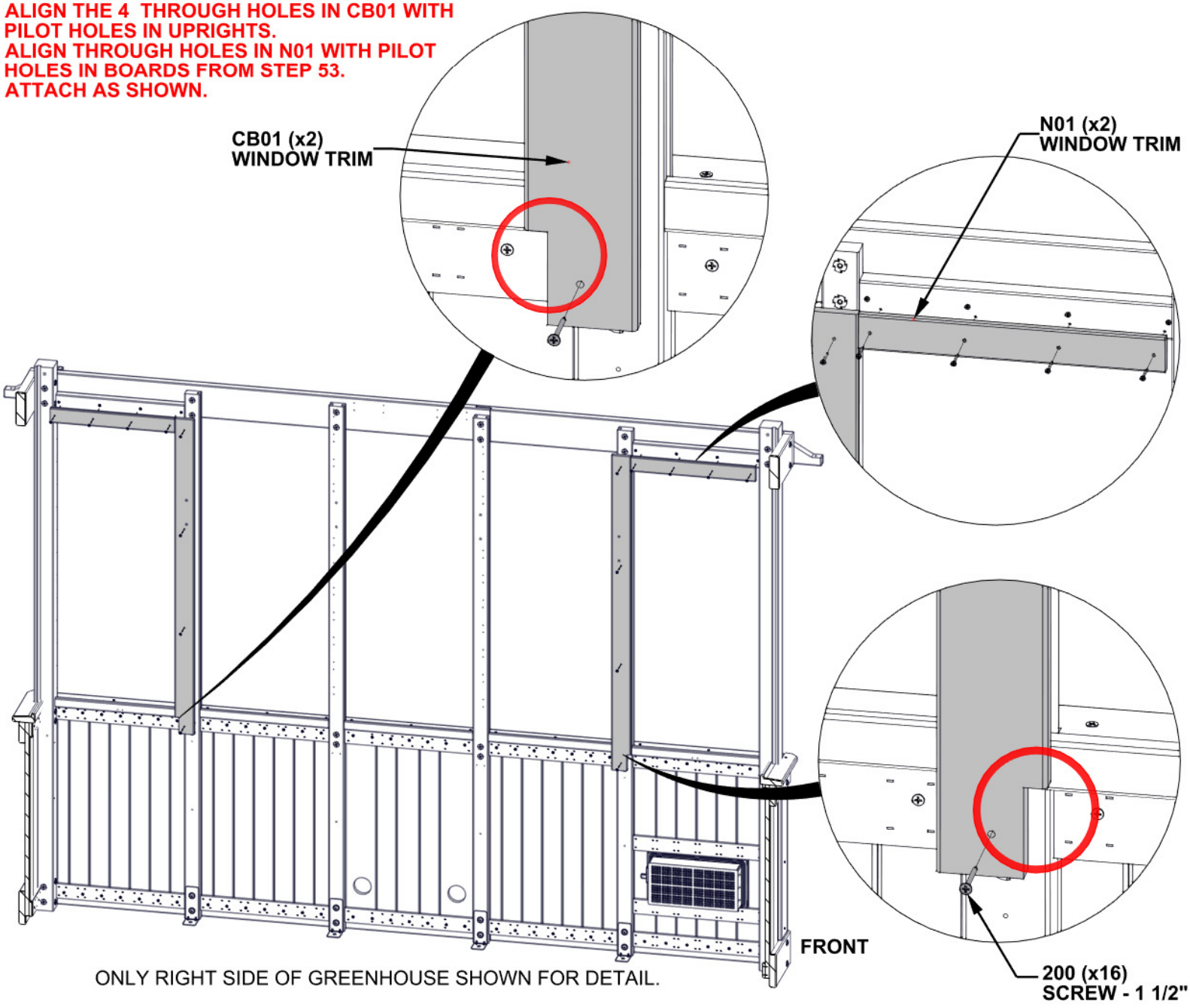

ONLY RIGHT SIDE OF GREENHOUSE SHOWN FOR DETAIL.

STEP 56 - SHELF ASSEMBLY

QTY	PART NUMBER	DESCRIPTION
8	H100399	NUT BARREL WH 1/4X7/8 BLK
8	H100400	WASHER LOCK EXT 8x15
8	H101026	BOLT WH 1/4x1 3/4 BLK

N13 (x2) SHELF SPACER - W4L21315
5/8"x2 3/8"x6 5/16" (16x60x160)

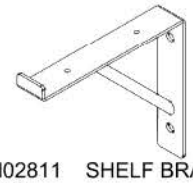

A4M02811 (x4) SHELF BRACKET

- ATTACH SHELF BRACKETS TO UPRIGHTS AS SHOWN.
- USE 90 DEGREE DRILL ADAPTER OR WRENCH FOR TOP BOLT.

N13 (x2)
SHELF SPACER

399 (x8)
BARREL NUT - 7/8"

400 (x8)
WASHER - 8x15

2811 (x4)
SHELF BRACKET

1026 (x8)
BOLT - 1 3/4"

FRONT

ONLY SIDE OF GREENHOUSE SHOWN FOR DETAIL.

STEP 57 - SHELF ASSEMBLY

QTY	PART NUMBER	DESCRIPTION
14	H100171	BOLT WH 1/4x1 BLK
14	H100399	NUT BARREL WH 1/4X7/8 BLK
14	H100400	WASHER LOCK EXT 8x15

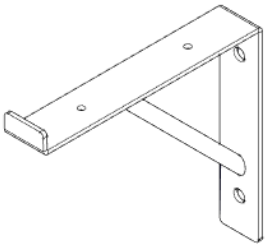

A4M02811 SHELF BRACKET
(x7)

- ATTACH SHELF BRACKETS TO UPRIGHTS AS SHOWN.
- USE 90 DEGREE DRILL ADAPTER OR WRENCH FOR TOP BOLT.

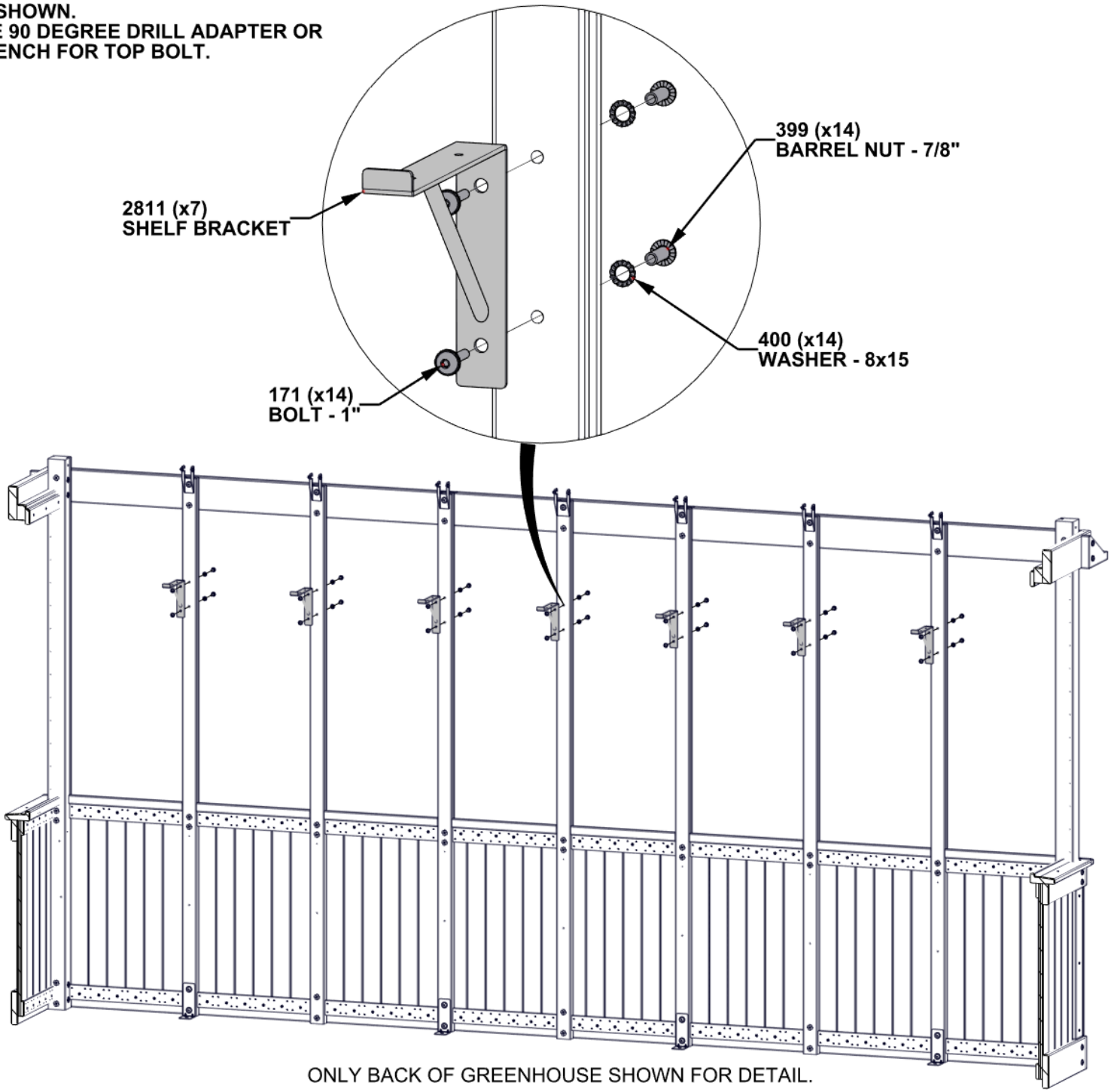

ONLY BACK OF GREENHOUSE SHOWN FOR DETAIL.

STEP 58 - SHELF ASSEMBLY

QTY	PART NUMBER	DESCRIPTION
8	H100399	NUT BARREL WH 1/4X7/8 BLK
8	H100400	WASHER LOCK EXT 8x15
8	H101026	BOLT WH 1/4x1 3/4 BLK

N13 (x2) SHELF SPACER - W4L21315 5/8"x2 3/8"x6 5/16" (16x60x160)

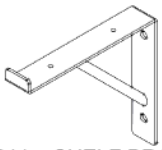

A4M02811 (x4) SHELF BRACKET

- ATTACH SHELF BRACKETS TO UPRIGHTS AS SHOWN.
- USE 90 DEGREE DRILL ADAPTER OR WRENCH FOR TOP BOLT.

N13 (x2)
SHELF SPACER

399 (x8)
BARREL NUT - 7/8"

400 (x8)
WASHER - 8x15

2811 (x4)
SHELF BRACKET

1026 (x8)
BOLT - 1 3/4"

FRONT

ONLY SIDE OF GREENHOUSE SHOWN FOR DETAIL.

STEP 59 - WINDOW ASSEMBLY

A6P00872 POLY CHANNEL
(x6)

REMOVE TAPE LINER ON POLY CHANNELS BEFORE INSTALLING.

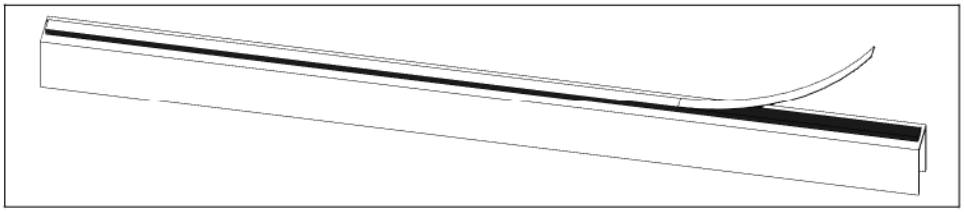

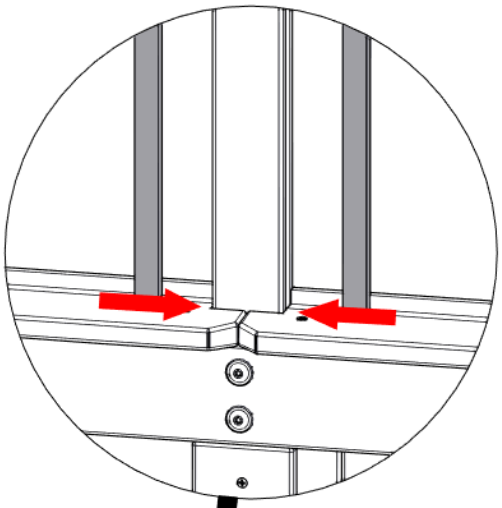

- INSERT POLY CHANNEL INTO GROOVE STARTING AT THE WINDOW SILL AND WORK UPWARDS.
- FIRMLY PRESS CHANNEL INTO GROOVE TO ENSURE TAPE ADHESION.

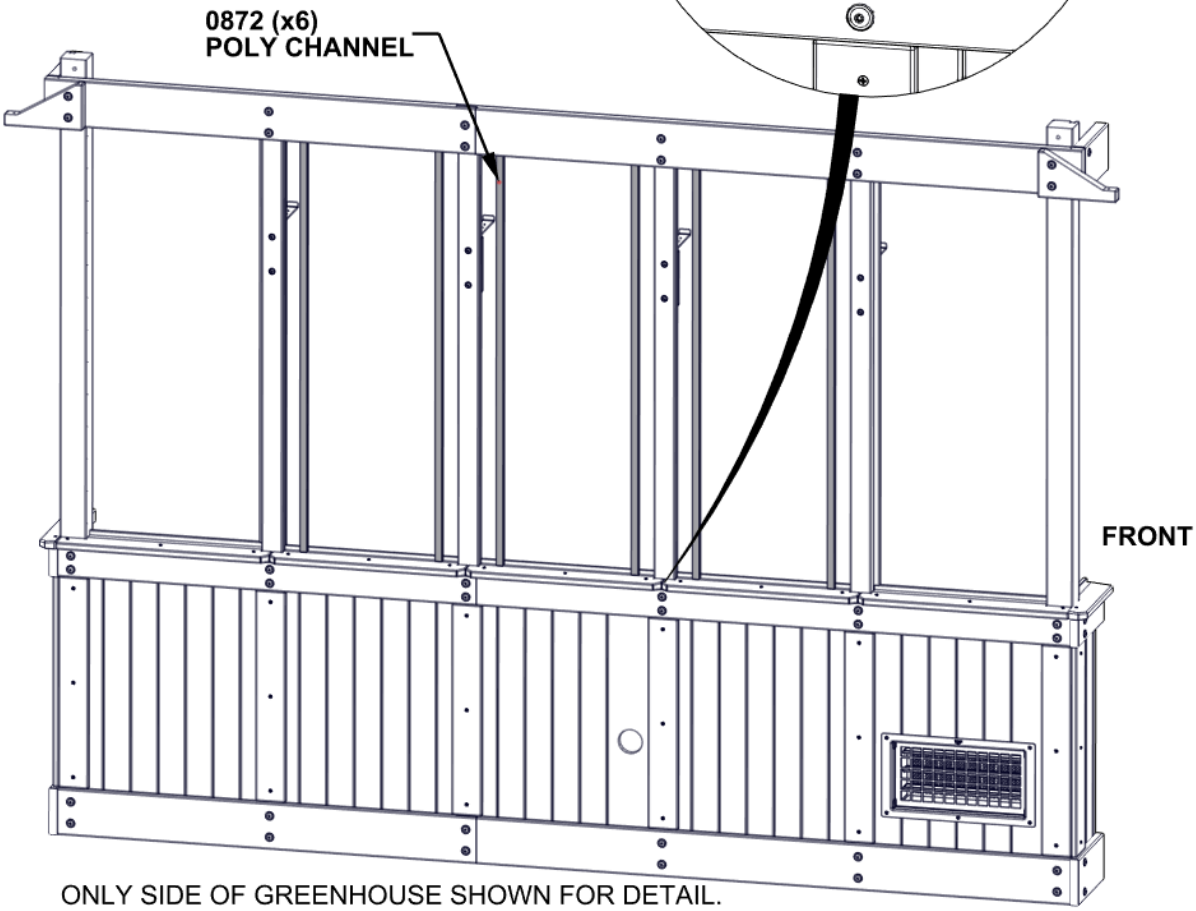

ONLY SIDE OF GREENHOUSE SHOWN FOR DETAIL.

STEP 60 - WINDOW ASSEMBLY

A6P00872 POLY CHANNEL
(x16)

REMOVE TAPE LINER ON POLY CHANNELS BEFORE INSTALLING.

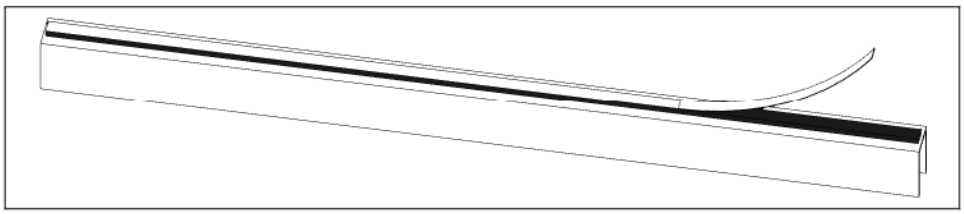

- INSERT POLY CHANNEL INTO GROOVE STARTING AT THE WINDOW SILL AND WORK UPWARDS.
- FIRMLY PRESS CHANNEL INTO GROOVE TO ENSURE TAPE ADHESION.

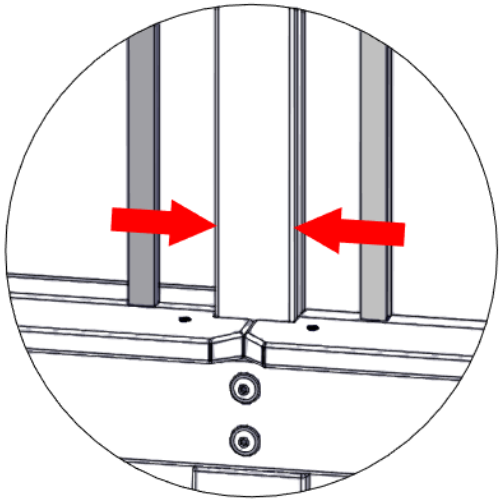

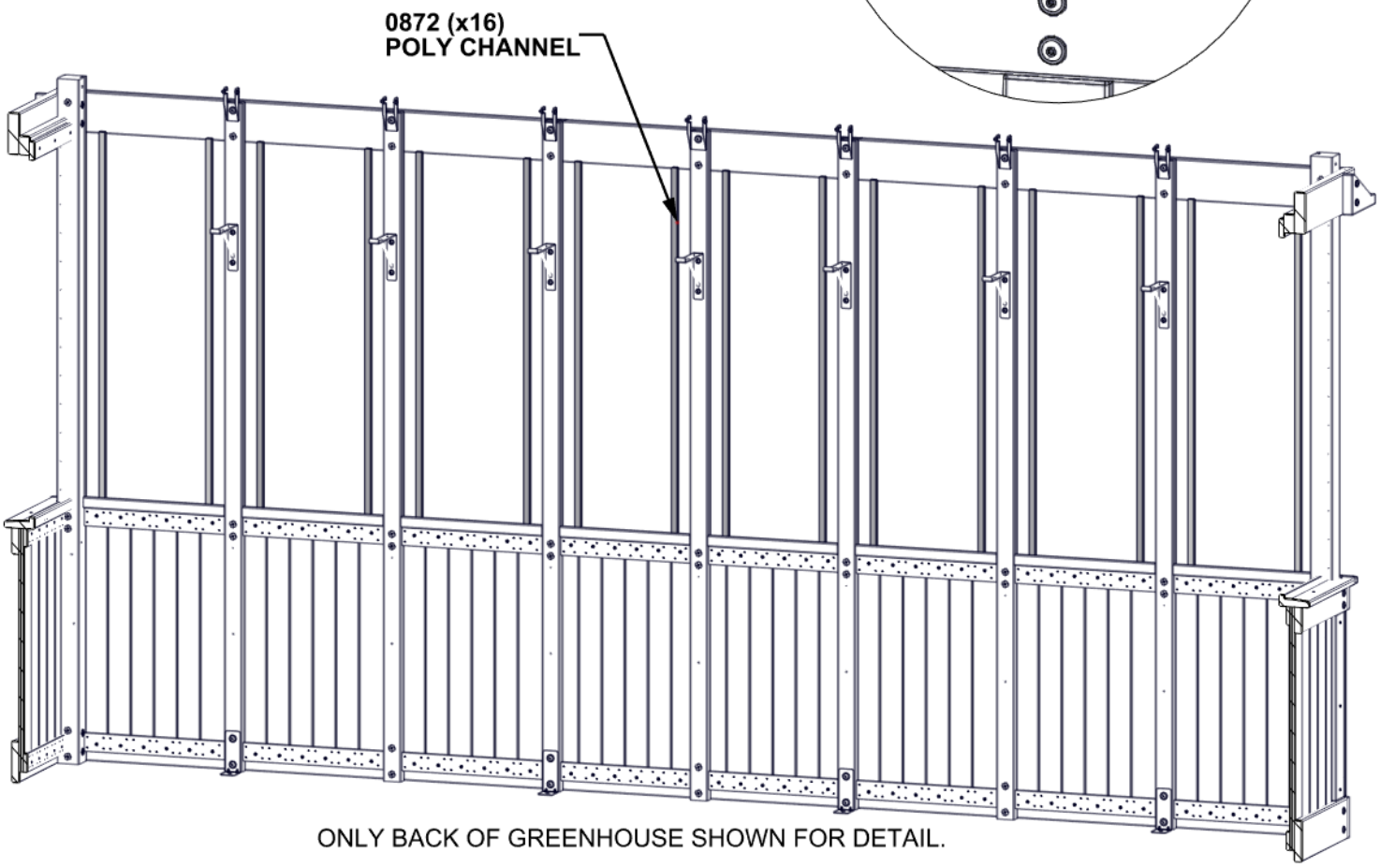

ONLY BACK OF GREENHOUSE SHOWN FOR DETAIL.

STEP 61 - WINDOW ASSEMBLY

A6P00872 POLY CHANNEL
(x6)

REMOVE TAPE LINER ON POLY CHANNELS BEFORE INSTALLING.

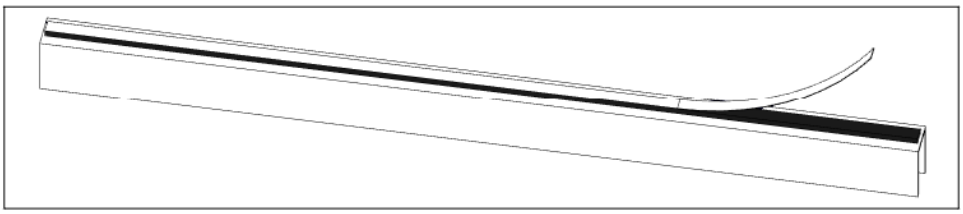

- **INSERT POLY CHANNEL INTO GROOVE STARTING AT THE WINDOW SILL AND WORK UPWARDS.**
- **FIRMLY PRESS CHANNEL INTO GROOVE TO ENSURE TAPE ADHESION.**

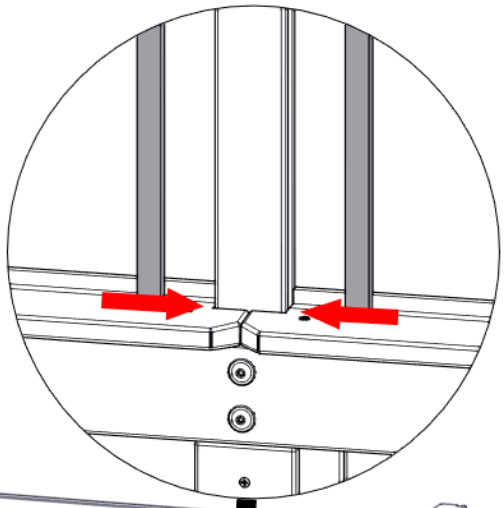

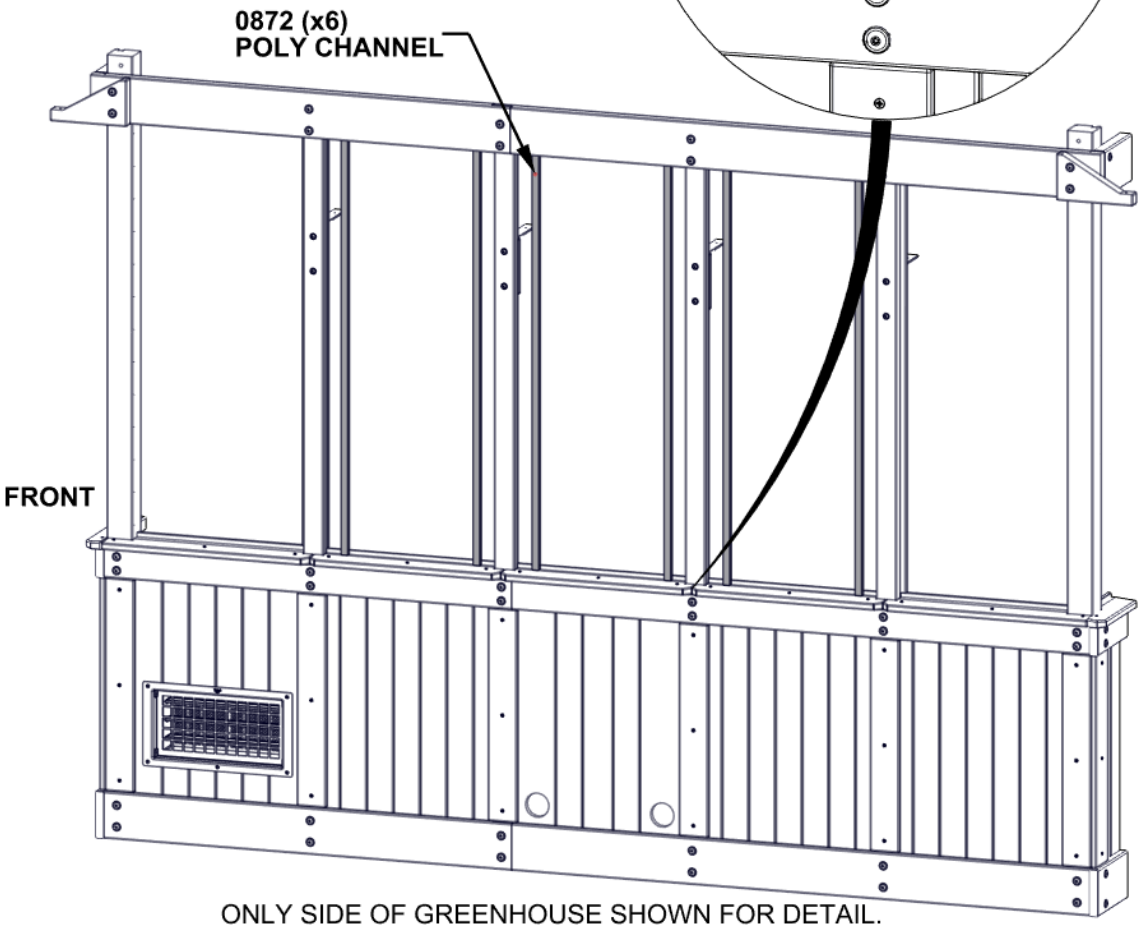

ONLY SIDE OF GREENHOUSE SHOWN FOR DETAIL.

STEP 62 - WINDOW ASSEMBLY

A6P00872 POLY CHANNEL
(x8)

REMOVE TAPE LINER ON POLY CHANNELS BEFORE INSTALLING.

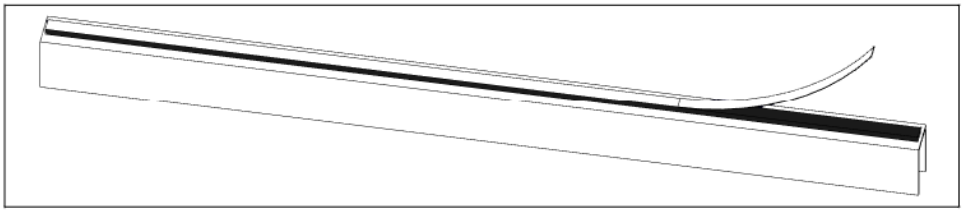

- INSERT POLY CHANNEL INTO GROOVE STARTING AT THE WINDOW SILL AND WORK UPWARDS.
- FIRMLY PRESS CHANNEL INTO GROOVE TO ENSURE TAPE ADHESION.

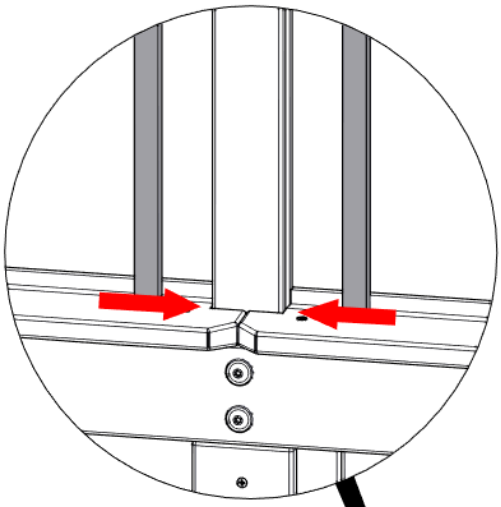

0872 (x8)
POLY CHANNEL

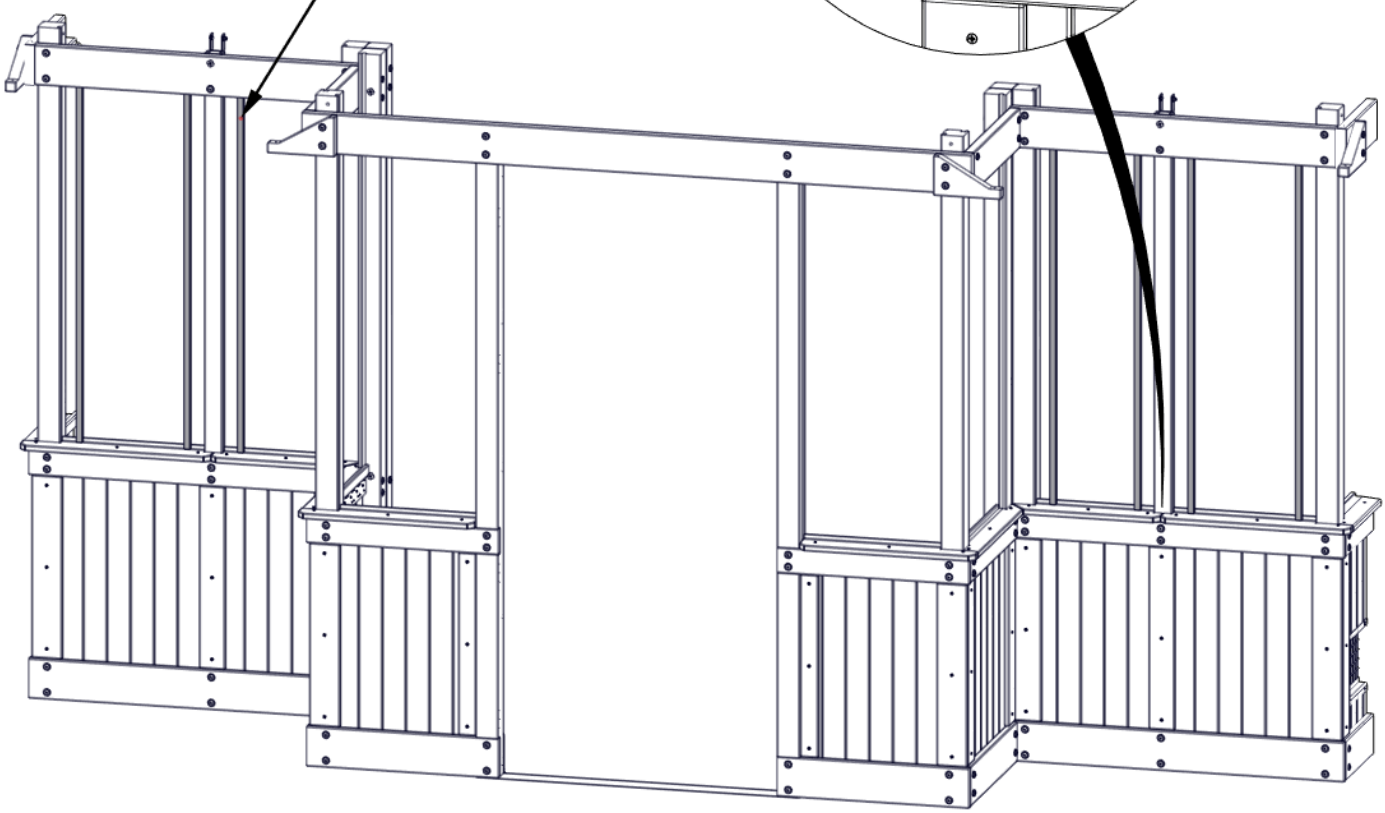

ONLY FRONT OF GREENHOUSE SHOWN FOR DETAIL.

STEP 63 - WINDOW ASSEMBLY

A6P00872 POLY CHANNEL
(x8)

REMOVE TAPE LINER ON POLY CHANNELS BEFORE INSTALLING.

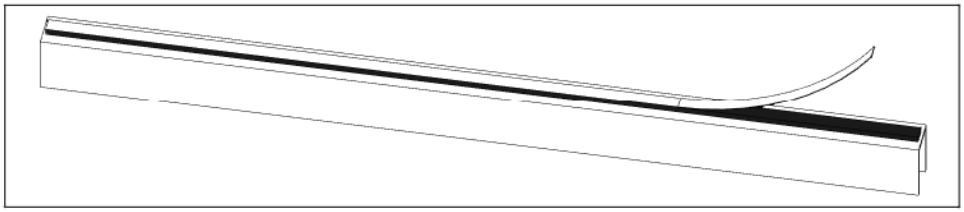

- INSERT POLY CHANNEL INTO GROOVE STARTING AT THE WINDOW SILL AND WORK UPWARDS.
- FIRMLY PRESS CHANNEL INTO GROOVE TO ENSURE TAPE ADHESION.

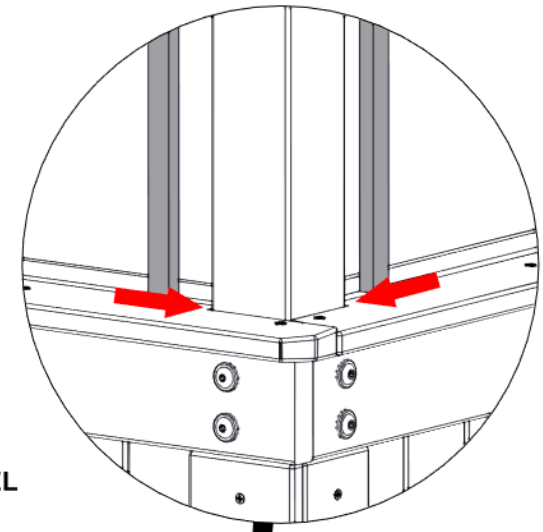

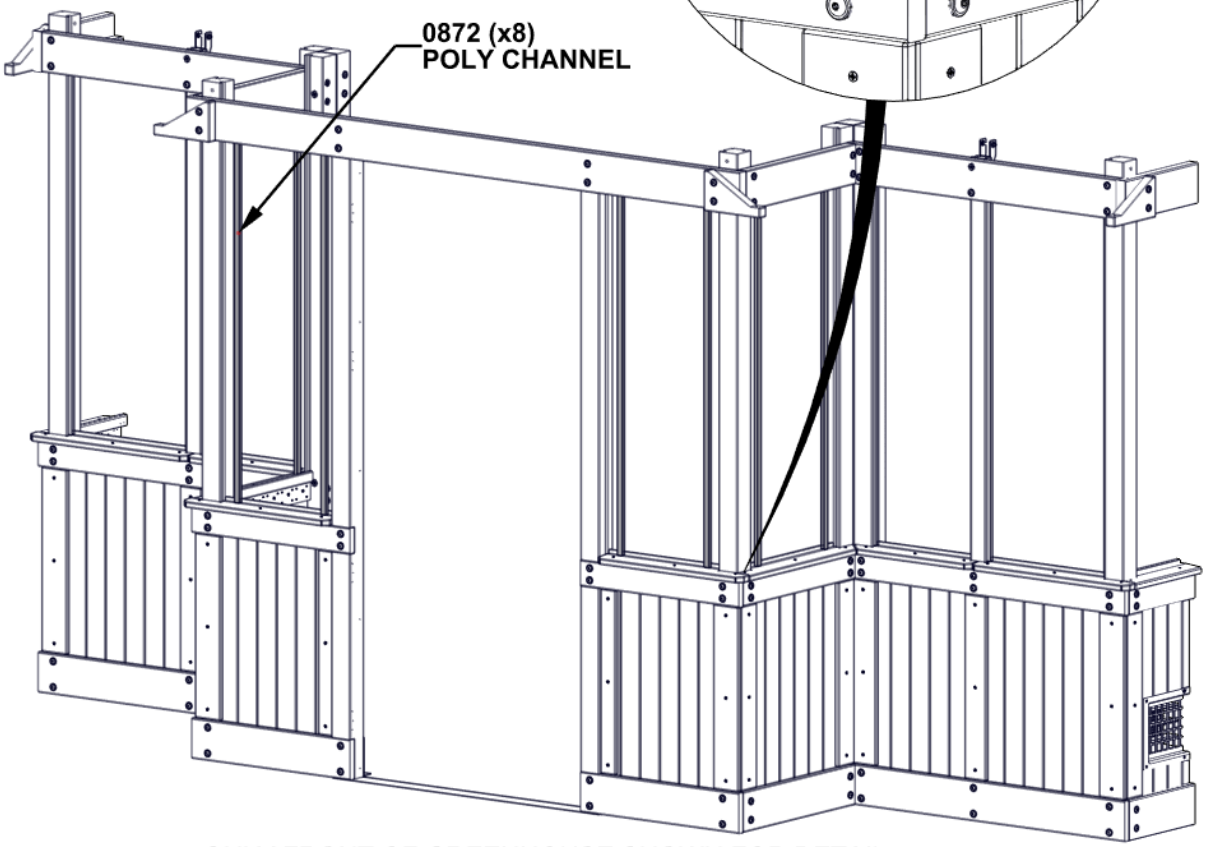

ONLY FRONT OF GREENHOUSE SHOWN FOR DETAIL.

STEP 64 - WINDOW ASSEMBLY

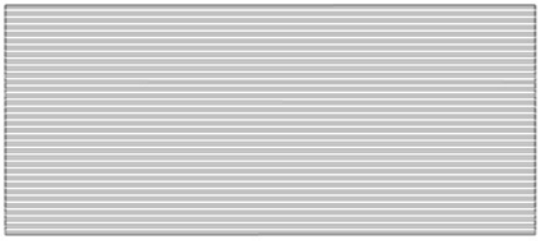

A6P01183 POLY SHEET
(x3)

A6P01184 POLY CHANNEL
(x6)

A6P00690 DUST SEAL TAPE

TO APPLY DUST SEAL TAPE AND POLY CHANNEL:
- CUT 2 STRIPS OF DUST SEAL TAPE THE SAME WIDTH AS THE POLY SHEET.
- WRAP DUST SEAL TAPE ALONG EDGE OF POLY SHEET WIDTH.
- AFTER TAPE IS SECURE, PUSH CHANNEL ON OVER THE TAPE, CENTERING ON THE POLY SHEET.
- REPEAT ON THE BOTTOM SIDE OF POLY SHEET.
- REPEAT FOR ALL THREE WINDOW ASSEMBLIES.

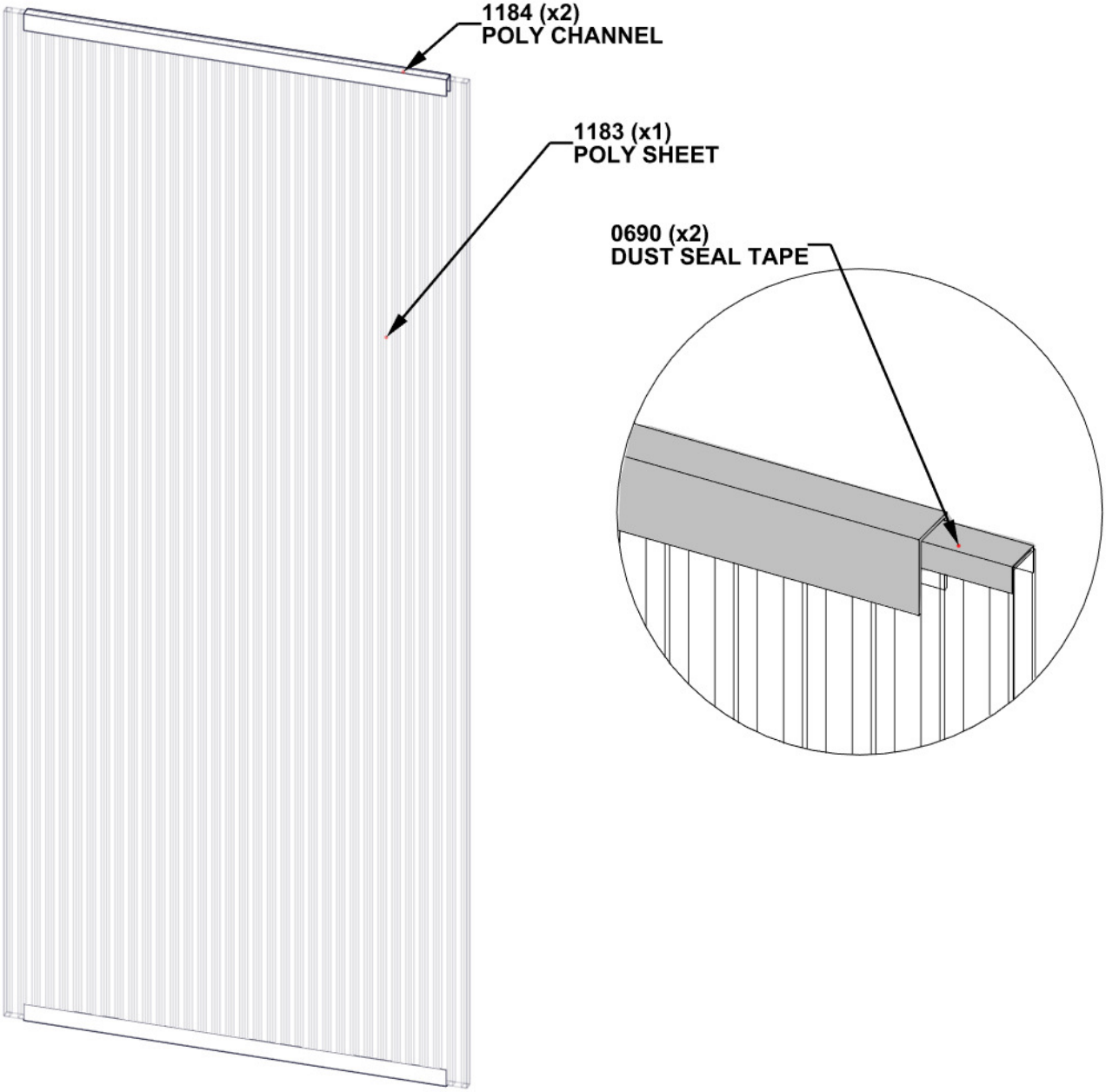

STEP 65 - WINDOW ASSEMBLY

IMPORTANT!

- ENSURE UV SIDE OF WINDOW IS FACING OUTSIDE.
- ONCE WINDOW IS INSTALLED, IT IS SAFE TO REMOVE THE PROTECTIVE FILM.

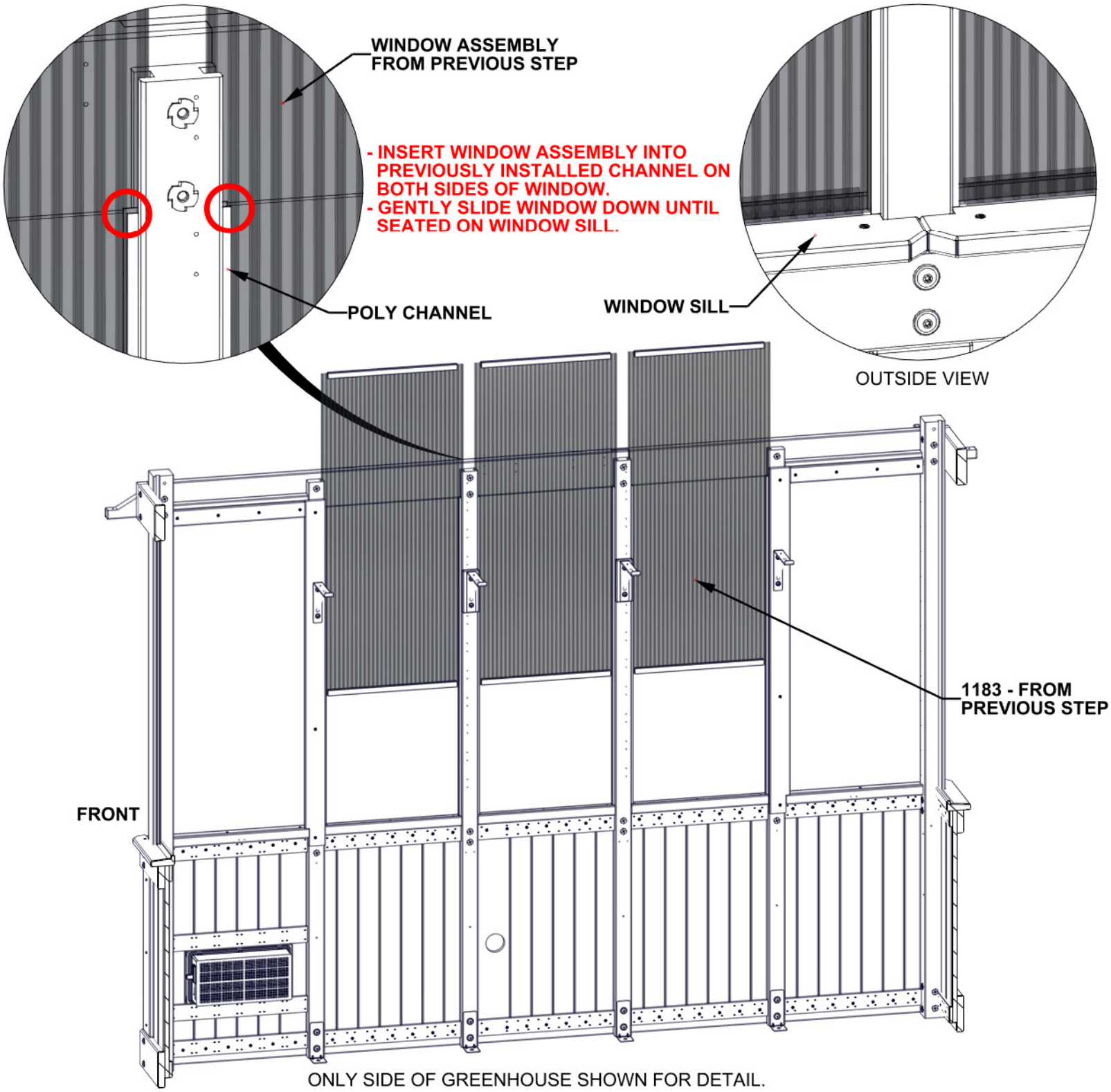

STEP 66 - WINDOW ASSEMBLY

A6P01175 POLY SHEET
(x6)

A6P01177 POLY SHEET
(x2)

A6P01176 POLY CHANNEL
(x12)

A6P01178 POLY CHANNEL
(x4)

A6P00690 DUST SEAL TAPE

TO APPLY DUST SEAL TAPE AND POLY CHANNEL:
- CUT 2 STRIPS OF DUST SEAL TAPE THE SAME WIDTH AS THE POLY SHEET.
- WRAP DUST SEAL TAPE ALONG EDGE OF POLY SHEET WIDTH.
- AFTER TAPE IS SECURE, PUSH CHANNEL ON OVER THE TAPE, CENTERING ON THE POLY SHEET.
- REPEAT ON THE BOTTOM SIDE OF POLY SHEET.

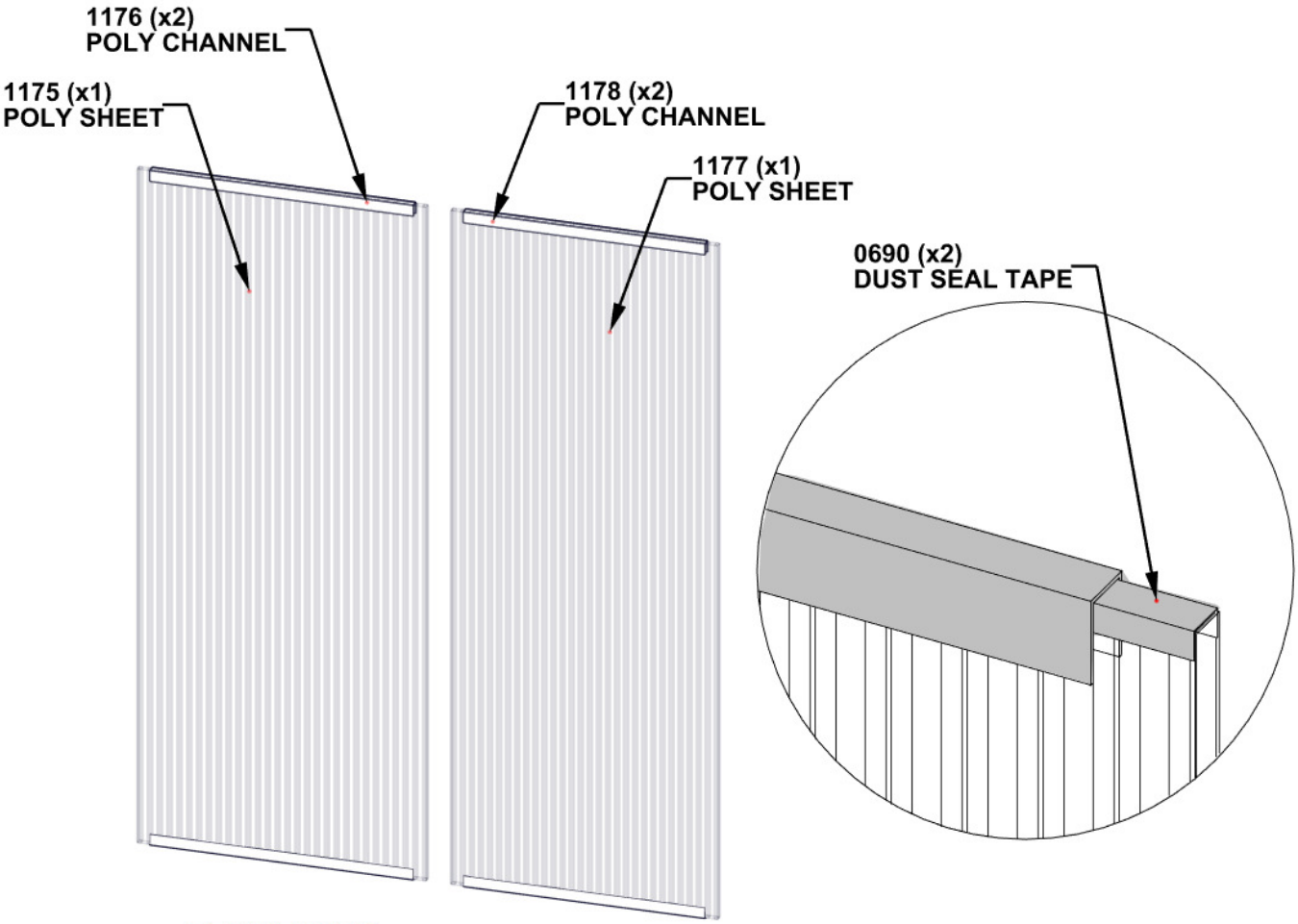

REPEAT FOR 6 TOTAL ASSEMBLIES.

REPEAT FOR 2 TOTAL ASSEMBLIES.

STEP 67 - WINDOW ASSEMBLY

IMPORTANT!

- ENSURE UV SIDE OF WINDOW IS FACING OUTSIDE.
- ONCE WINDOW IS INSTALLED, IT IS SAFE TO REMOVE THE PROTECTIVE FILM.

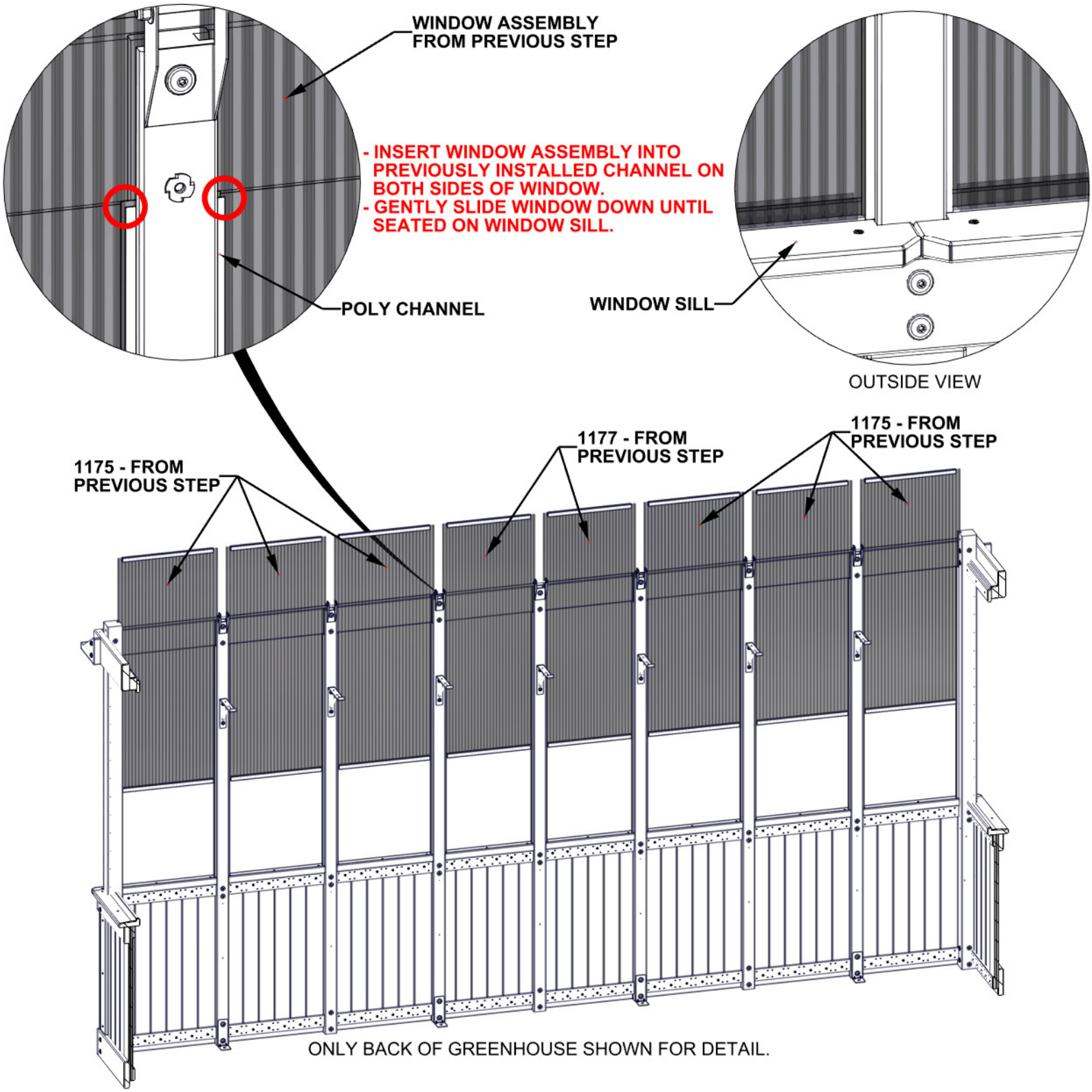

STEP 68 - WINDOW ASSEMBLY

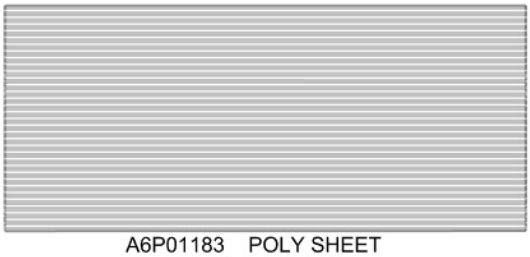

A6P01183 POLY SHEET
(x3)

A6P01184 POLY CHANNEL
(x6)

A6P00690 DUST SEAL TAPE

TO APPLY DUST SEAL TAPE AND POLY CHANNEL:
- CUT 2 STRIPS OF DUST SEAL TAPE THE SAME WIDTH AS THE POLY SHEET.
- WRAP DUST SEAL TAPE ALONG EDGE OF POLY SHEET WIDTH.
- AFTER TAPE IS SECURE, PUSH CHANNEL ON OVER THE TAPE, CENTERING ON THE POLY SHEET.
- REPEAT ON THE BOTTOM SIDE OF POLY SHEET.
- REPEAT FOR ALL THREE WINDOW ASSEMBLIES.

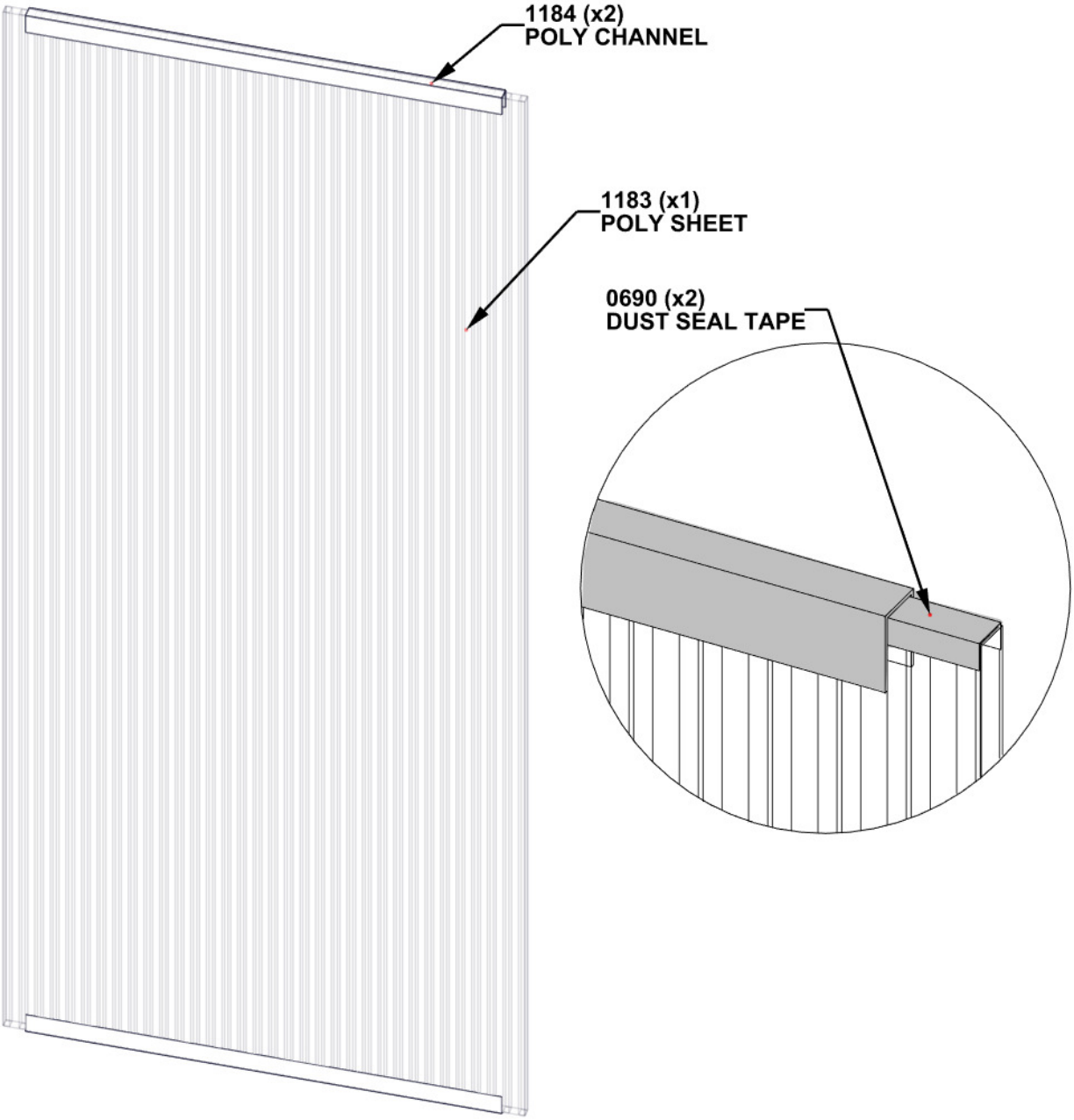

STEP 69 - WINDOW ASSEMBLY

IMPORTANT!

- ENSURE UV SIDE OF WINDOW IS FACING OUTSIDE.
- ONCE WINDOW IS INSTALLED, IT IS SAFE TO REMOVE THE PROTECTIVE FILM.

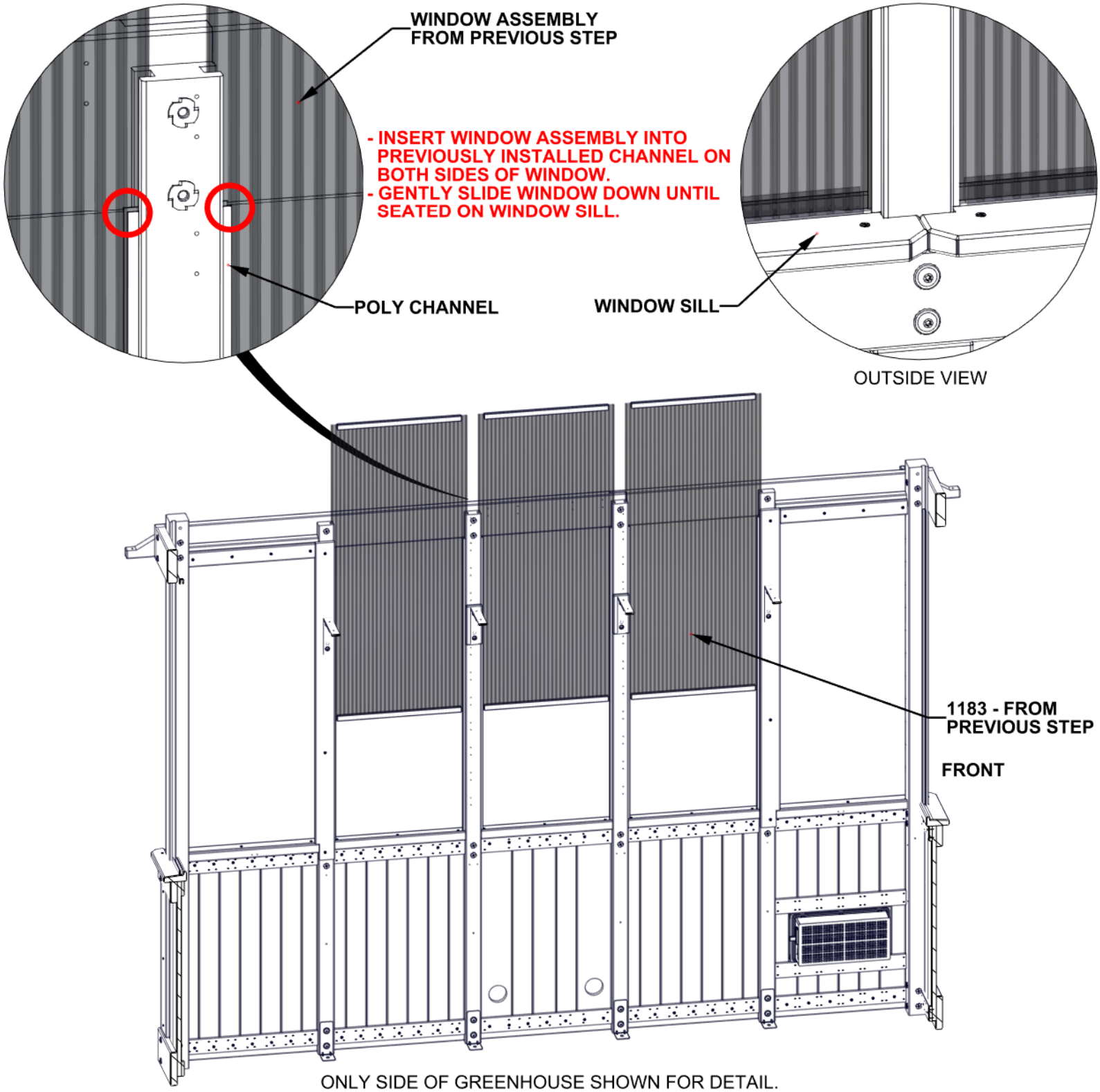

ONLY SIDE OF GREENHOUSE SHOWN FOR DETAIL.

STEP 70 - WINDOW ASSEMBLY

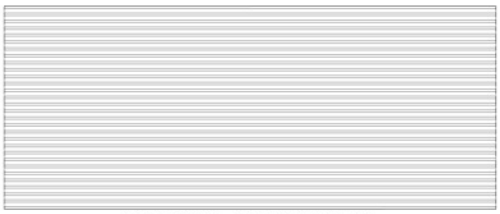

A6P01175 POLY SHEET
(x2)

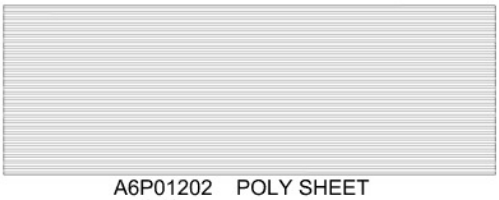

A6P01202 POLY SHEET
(x2)

A6P00690 DUST SEAL TAPE

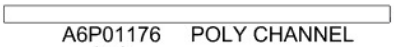

A6P01176 POLY CHANNEL
(x4)

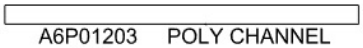

A6P01203 POLY CHANNEL
(x4)

TO APPLY DUST SEAL TAPE AND POLY CHANNEL:
- **CUT 2 STRIPS OF DUST SEAL TAPE THE SAME WIDTH AS THE POLY SHEET.**
- **WRAP DUST SEAL TAPE ALONG EDGE OF POLY SHEET WIDTH.**
- **AFTER TAPE IS SECURE, PUSH CHANNEL ON OVER THE TAPE, CENTERING ON THE POLY SHEET.**
- **REPEAT ON THE BOTTOM SIDE OF POLY SHEET.**
- **REPEAT FOR ALL FOUR WINDOW ASSEMBLIES.**

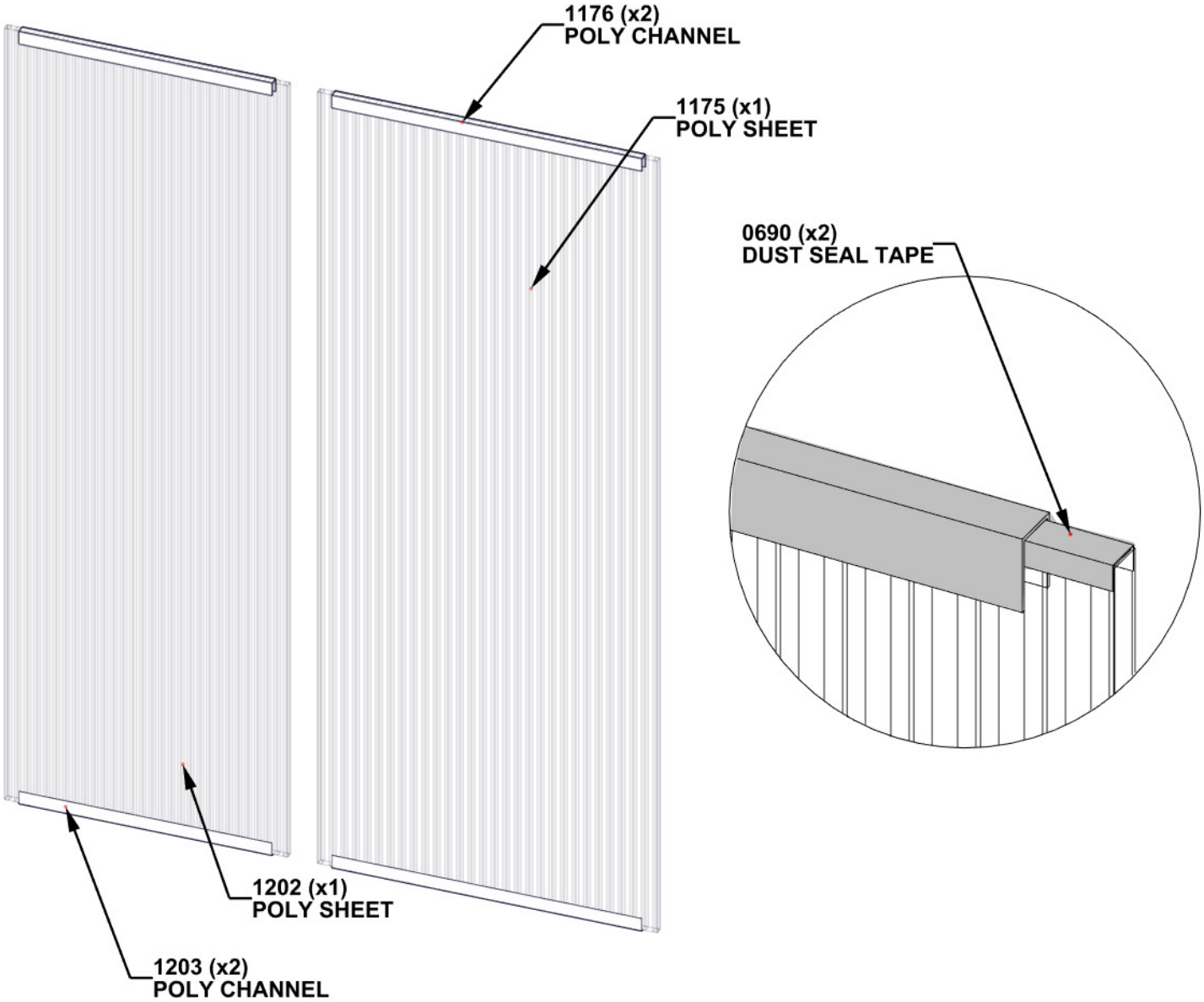

STEP 71 - WINDOW ASSEMBLY

IMPORTANT!

- ENSURE UV SIDE OF WINDOW IS FACING OUTSIDE.
- ONCE WINDOW IS INSTALLED, IT IS SAFE TO REMOVE THE PROTECTIVE FILM.

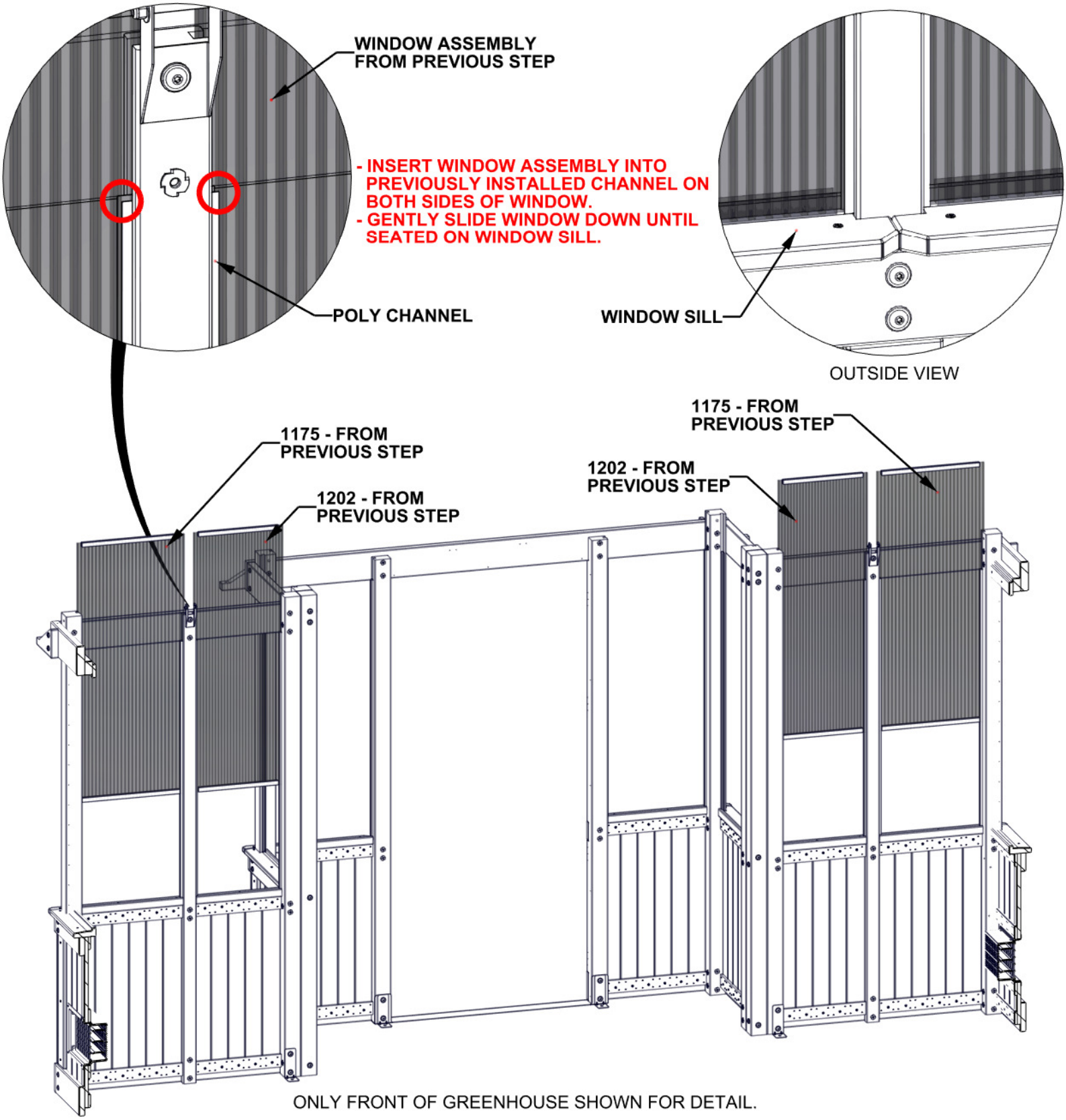

STEP 72 - WINDOW ASSEMBLY

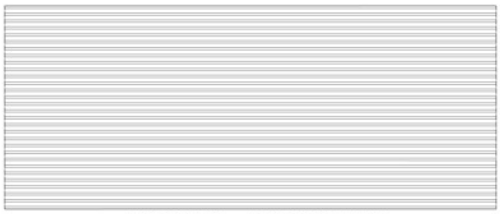

A6P01175 POLY SHEET
(x2)

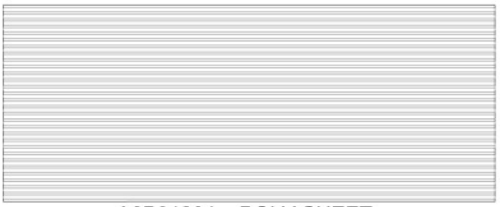

A6P01204 POLY SHEET
(x2)

A6P00690 DUST SEAL TAPE

A6P01176 POLY CHANNEL
(x4)

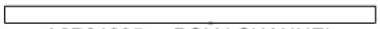

A6P01205 POLY CHANNEL
(x4)

TO APPLY DUST SEAL TAPE AND POLY CHANNEL:
- **CUT 2 STRIPS OF DUST SEAL TAPE THE SAME WIDTH AS THE POLY SHEET.**
- **WRAP DUST SEAL TAPE ALONG EDGE OF POLY SHEET WIDTH.**
- **AFTER TAPE IS SECURE, PUSH CHANNEL ON OVER THE TAPE, CENTERING ON THE POLY SHEET.**
- **REPEAT ON THE BOTTOM SIDE OF POLY SHEET.**
- **REPEAT FOR ALL FOUR WINDOW ASSEMBLIES.**

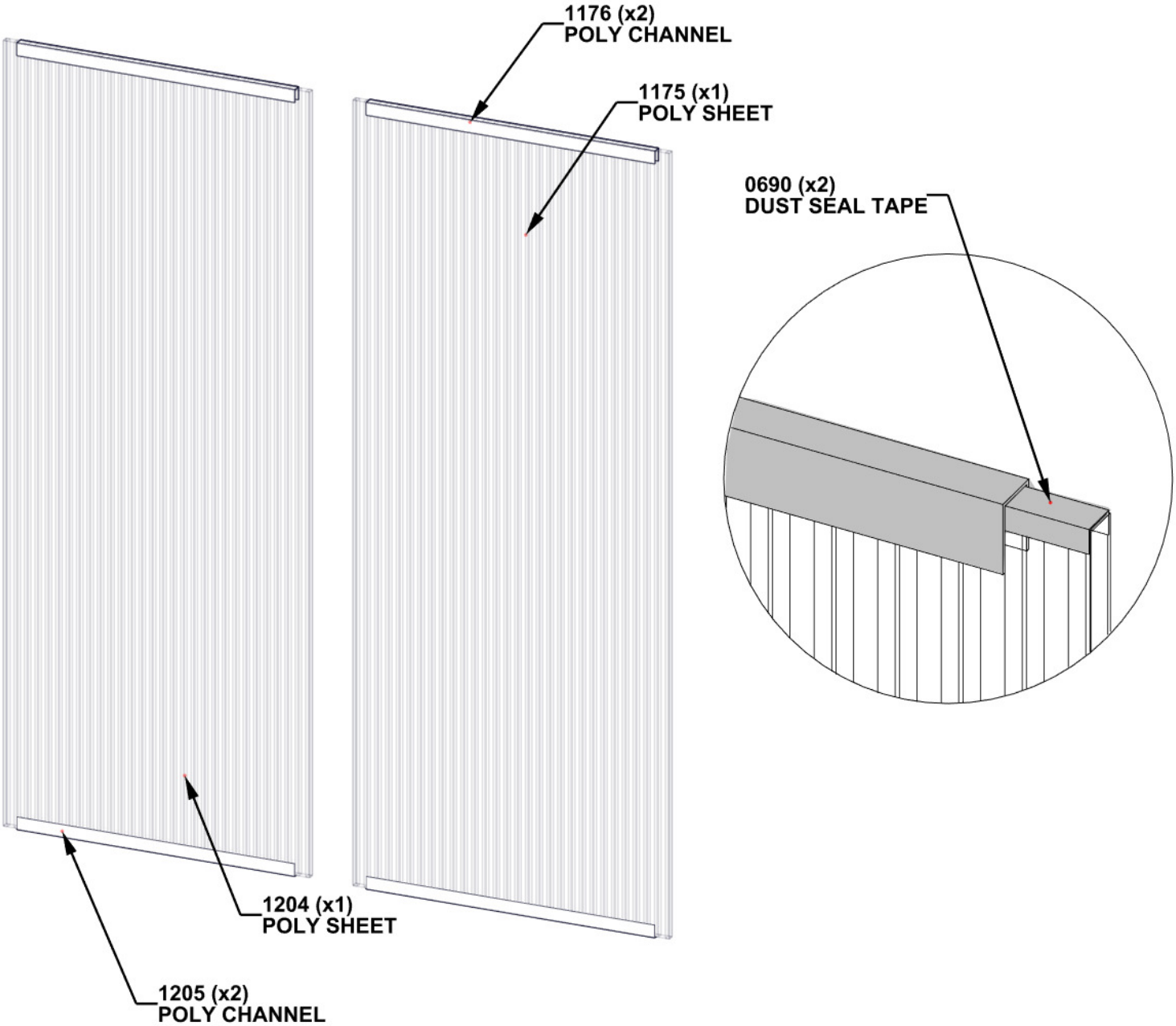

STEP 73 - WINDOW ASSEMBLY

IMPORTANT!

- ENSURE UV SIDE OF WINDOW IS FACING OUTSIDE.
- ONCE WINDOW IS INSTALLED, IT IS SAFE TO REMOVE THE PROTECTIVE FILM.

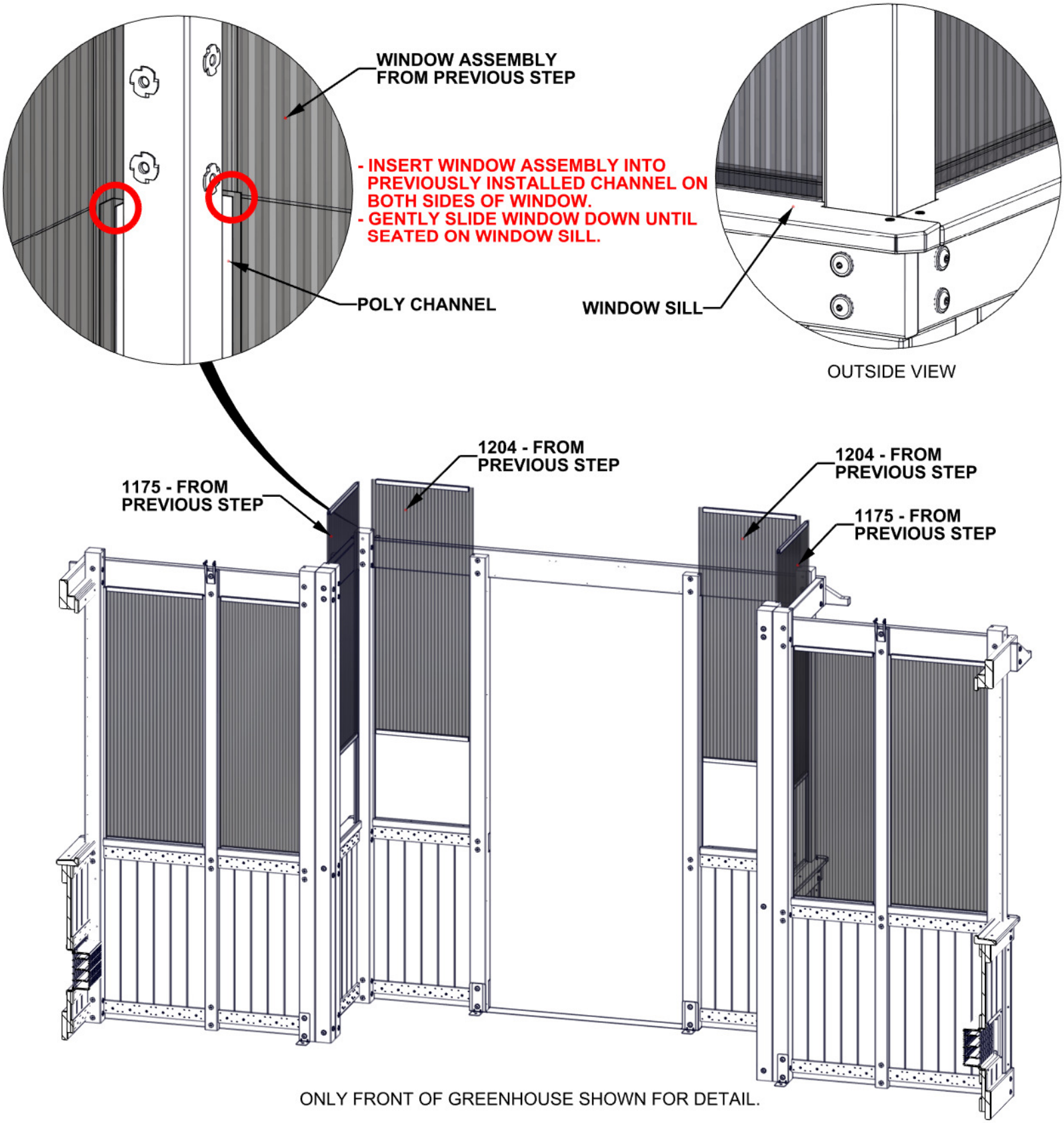

ONLY FRONT OF GREENHOUSE SHOWN FOR DETAIL.

STEP 74 - WINDOW ASSEMBLY

QTY	PART NUMBER	DESCRIPTION
6	H100391	SCREW PFH 8x2 BLK

P03 WINDOW CAP - W4L20880
(x3) 1 7/16"x1 7/16"x19 15/16" (36x36x507)

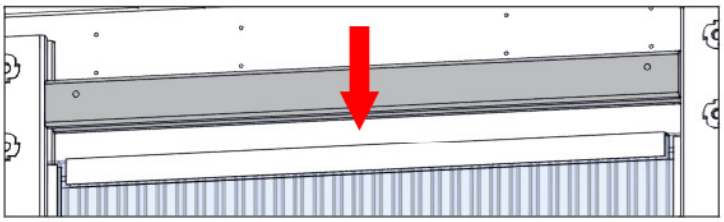

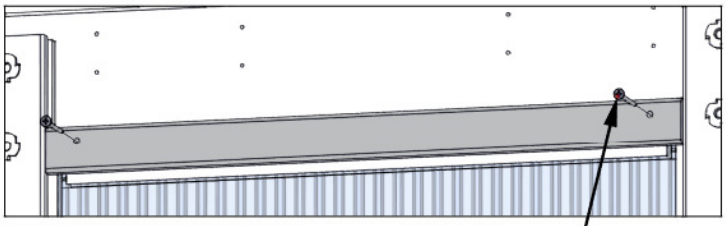

SLIDE GROOVE IN WINDOW CAP OVER WINDOW ASSEMBLY AND SCREW INTO PLACE.

391 (x6) SCREW - 2"

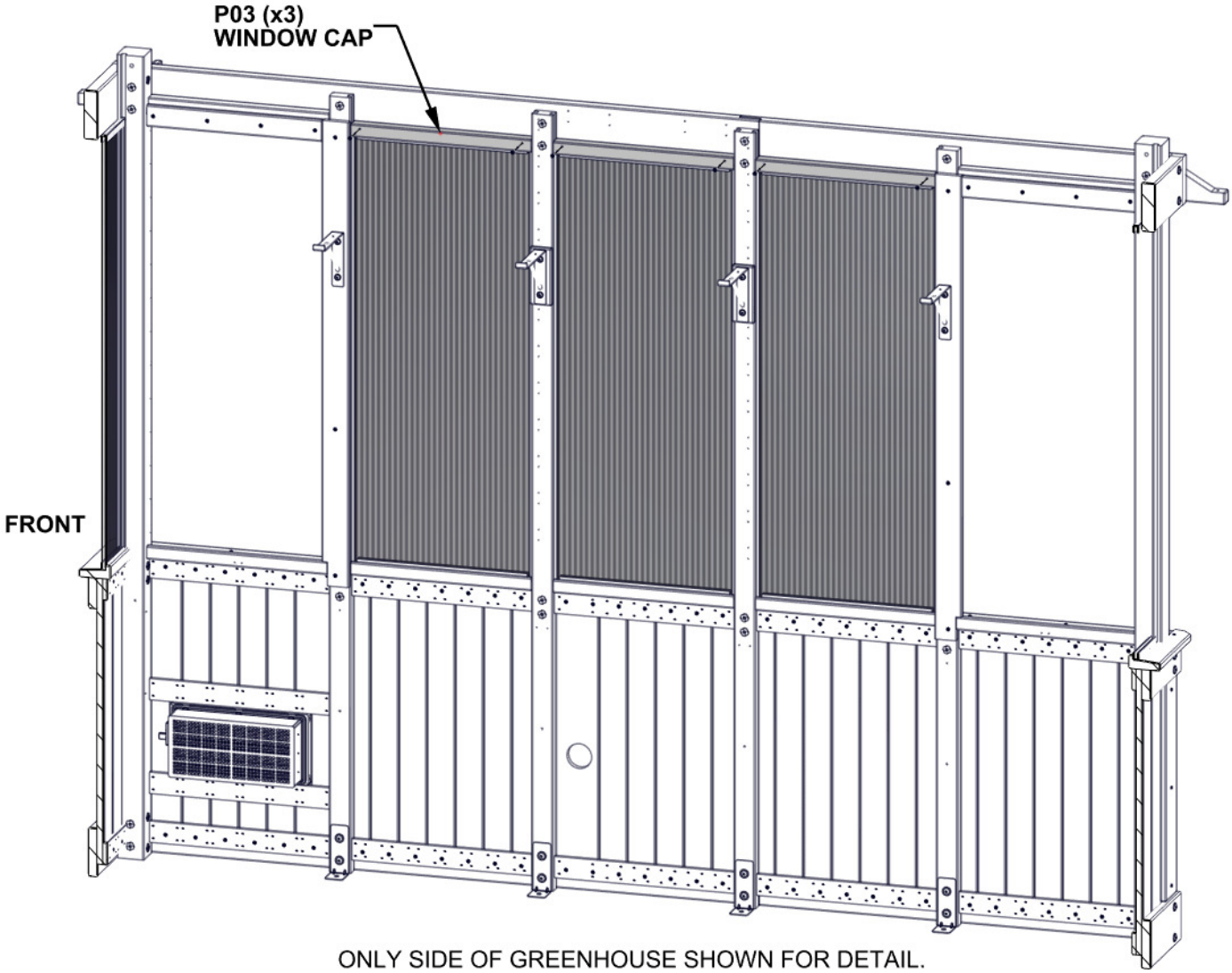

ONLY SIDE OF GREENHOUSE SHOWN FOR DETAIL.

STEP 75 - WINDOW ASSEMBLY

QTY	PART NUMBER	DESCRIPTION
16	H100391	SCREW PFH 8x2 BLK

P01 WINDOW CAP - W4L20845
(x6) 1 7/16"x1 7/16"x19 1/16" (36x36x484)

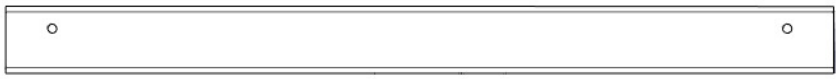

P02 WINDOW CAP - W4L20860
(x2) 1 7/16"x1 7/16"x17 9/16" (36x36x446)

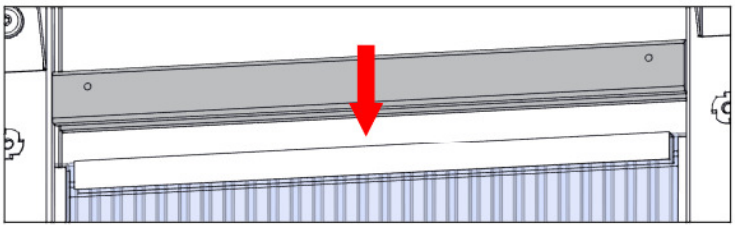

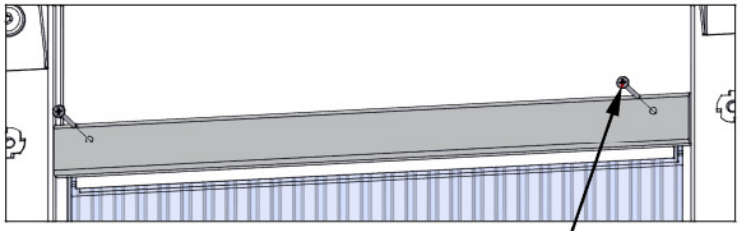

SLIDE GROOVE IN WINDOW CAP OVER WINDOW ASSEMBLY AND SCREW INTO PLACE.

391 (x16) SCREW - 2"

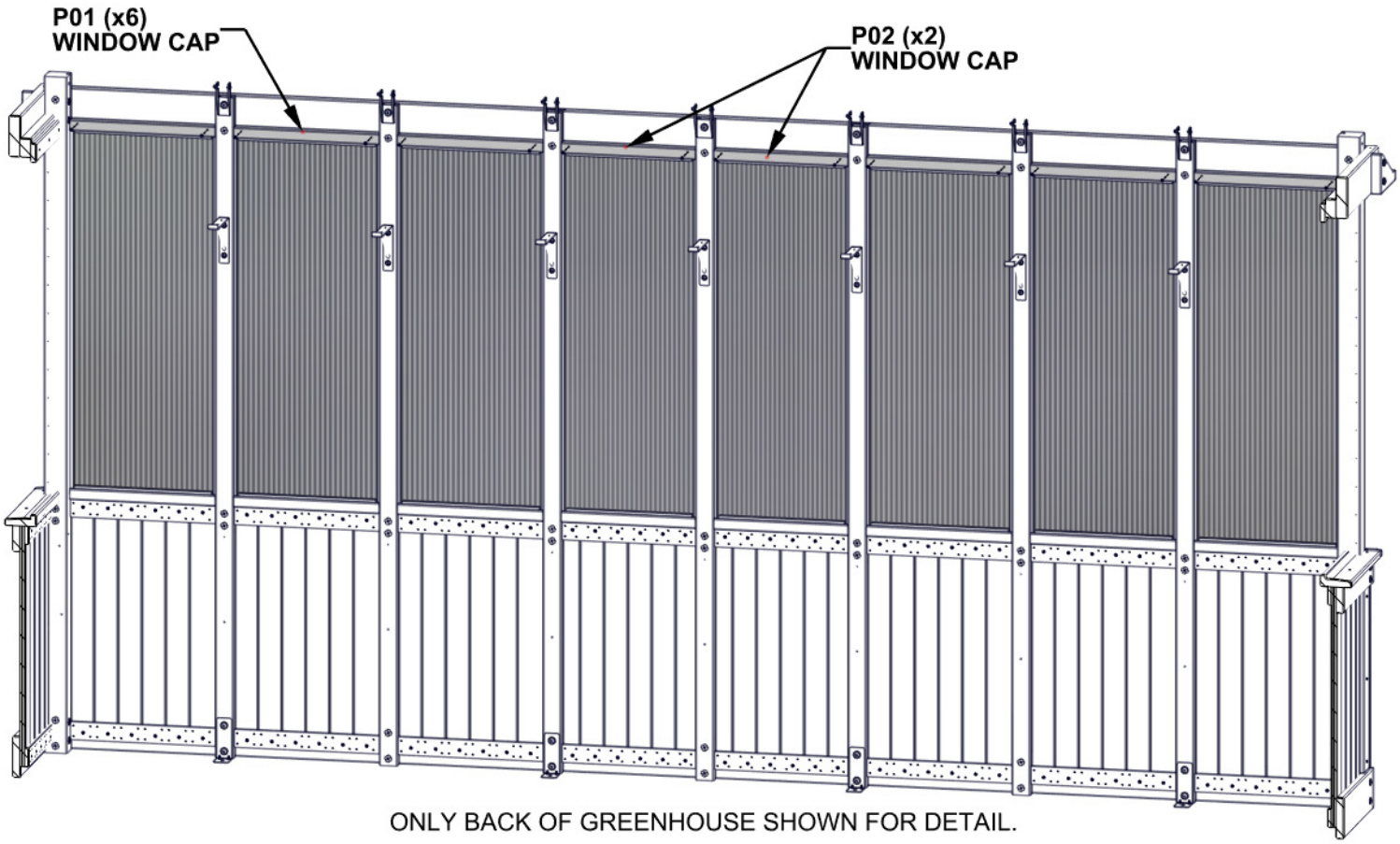

ONLY BACK OF GREENHOUSE SHOWN FOR DETAIL.

STEP 76 - WINDOW ASSEMBLY

QTY	PART NUMBER	DESCRIPTION
6	H100391	SCREW PFH 8x2 BLK

P03 WINDOW CAP - W4L20880
(x3) 1 7/16"x1 7/16"x19 15/16" (36x36x507)

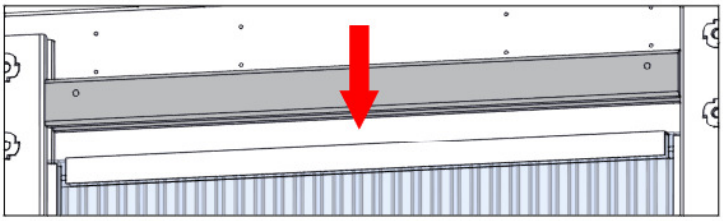

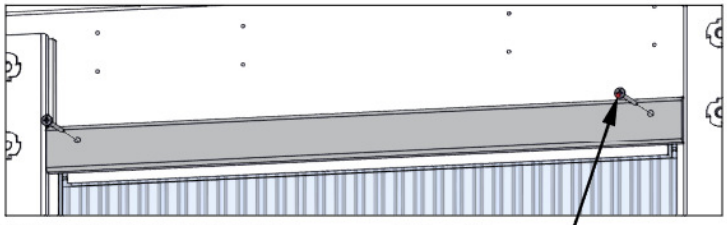

SLIDE GROOVE IN WINDOW CAP OVER WINDOW ASSEMBLY AND SCREW INTO PLACE.

391 (x6) SCREW - 2"

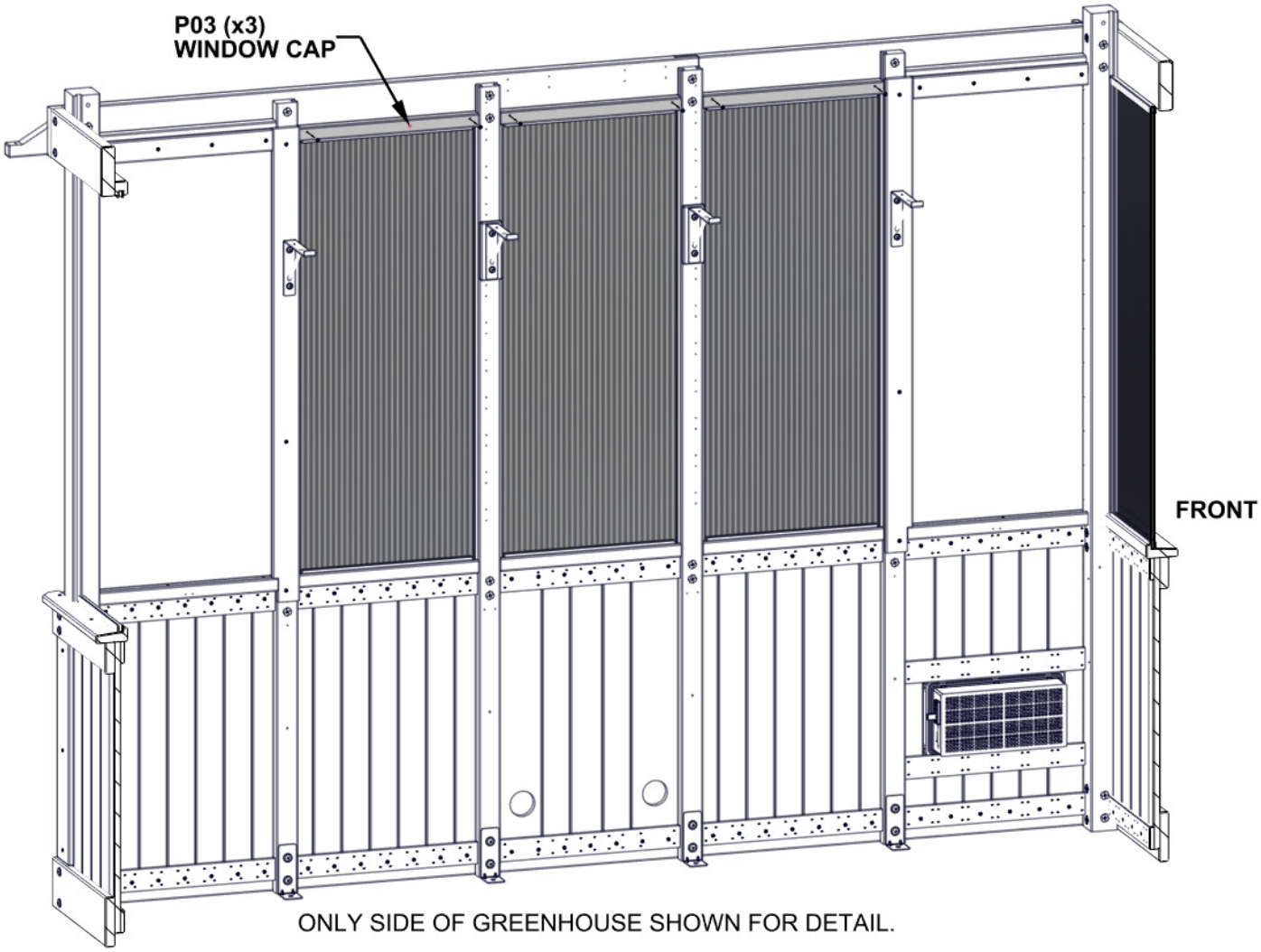

ONLY SIDE OF GREENHOUSE SHOWN FOR DETAIL.

STEP 77 - WINDOW ASSEMBLY

QTY	PART NUMBER	DESCRIPTION
8	H100391	SCREW PFH 8x2 BLK

P01 WINDOW CAP - W4L20845
(x2) 1 7/16"x1 7/16"x19 1/16" (36x36x484)

P04 WINDOW CAP - W4L20942
(x2) 1 7/16"x1 7/16"x15 3/4" (36x36x400)

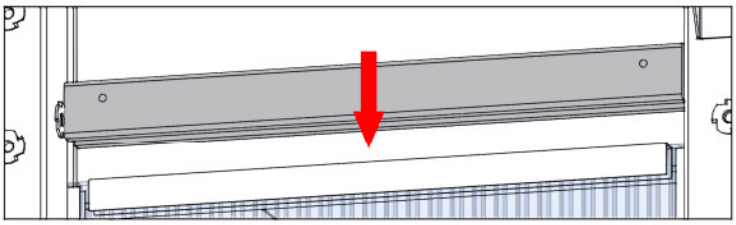

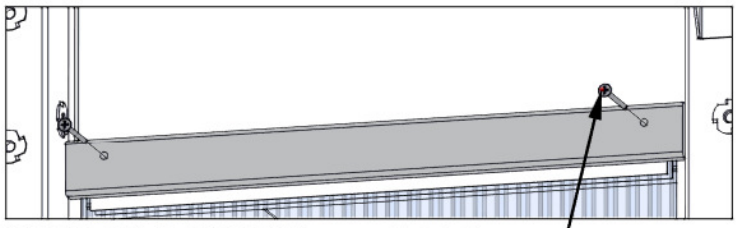

SLIDE GROOVE IN WINDOW CAP OVER WINDOW ASSEMBLY AND SCREW INTO PLACE.

391 (x8) SCREW - 2"

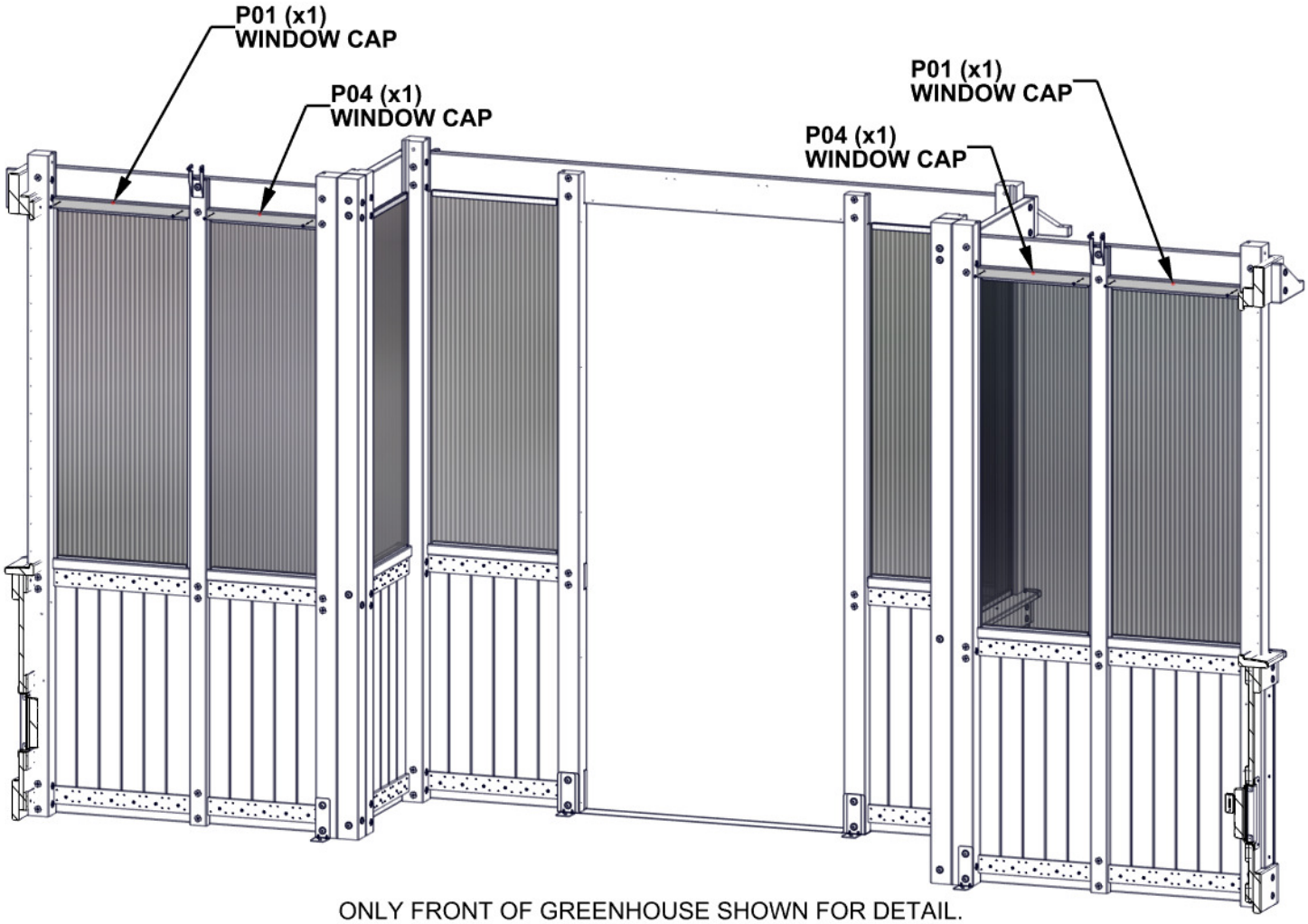

ONLY FRONT OF GREENHOUSE SHOWN FOR DETAIL.

STEP 78 - WINDOW ASSEMBLY

QTY	PART NUMBER	DESCRIPTION
8	H100391	SCREW PFH 8x2 BLK

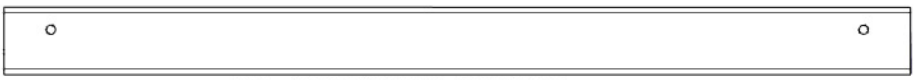

P01 WINDOW CAP - W4L20845
(x2) 1 7/16"x1 7/16"x19 1/16" (36x36x484)

P05 WINDOW CAP - W4L20943
(x2) 1 7/16"x1 7/16"x18 7/16" (36x36x468)

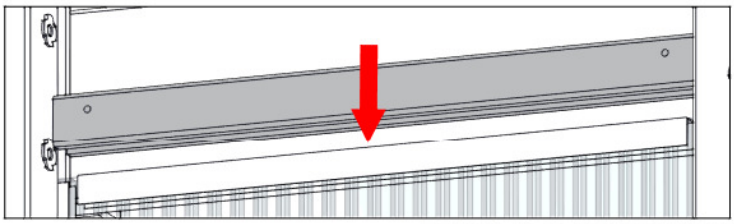

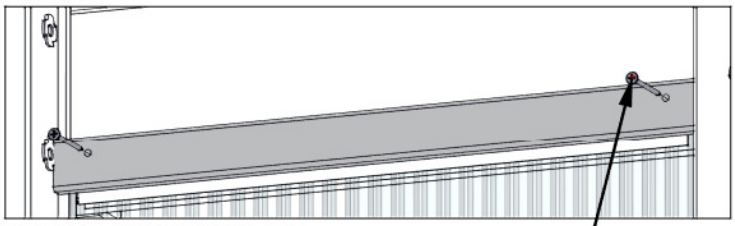

SLIDE GROOVE IN WINDOW CAP OVER WINDOW ASSEMBLY AND SCREW INTO PLACE.

391 (x8) SCREW - 2"

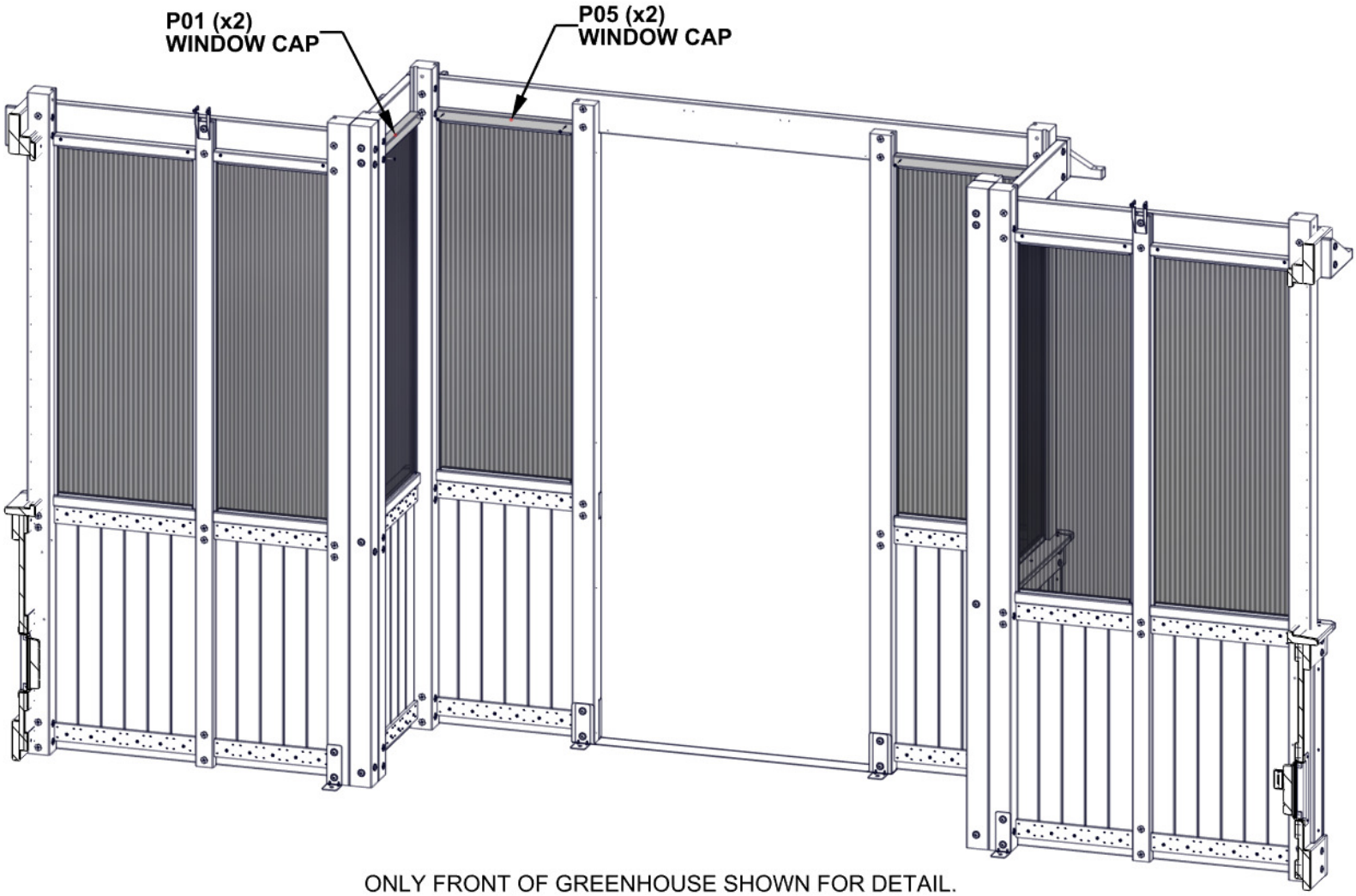

ONLY FRONT OF GREENHOUSE SHOWN FOR DETAIL.

STEP 79 - WINDOW ASSEMBLY

QTY	PART NUMBER	DESCRIPTION
12	H100380	SCREW PFH 8x1 1/8 BLK
4	H100627	SCREW PFH 6x3/4 BLK

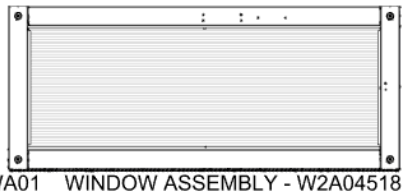

WA01 (x1) WINDOW ASSEMBLY - W2A04518
1 7/8"x19 5/8"x47 3/16" (48x498x1198)

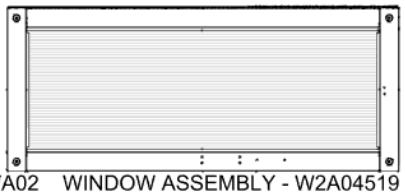

WA02 (x1) WINDOW ASSEMBLY - W2A04519
1 7/8"x19 5/8"x47 3/16" (48x498x1198)

O01 (x2) LATCH BLOCK - W4L20883
1 5/16"x5/8"x4 3/4" (16x34x120)

A4M00559 (x2) PULL HANDLE

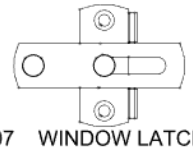

A4M02607 (x2) WINDOW LATCH LOCK

- **ALIGN PILOT HOLES**
- **KEEP OTHER PART OF WINDOW LATCH LOCK AT HAND FOR LATER STEP.**

380 (x12) SCREW - 1 1/8"

0559 (x2) PULL HANDLE

O01 (x2) LATCH BLOCK

2607 (x2) WINDOW LATCH LOCK

627 (x4) SCREW - 3/4"

WA01 (x1) WINDOW ASSEMBLY

WA02 (x1) WINDOW ASSEMBLY

STEP 80 - WINDOW ASSEMBLY

QTY	PART NUMBER	DESCRIPTION
26	H101191	SCREW PFH 6x1 BLK

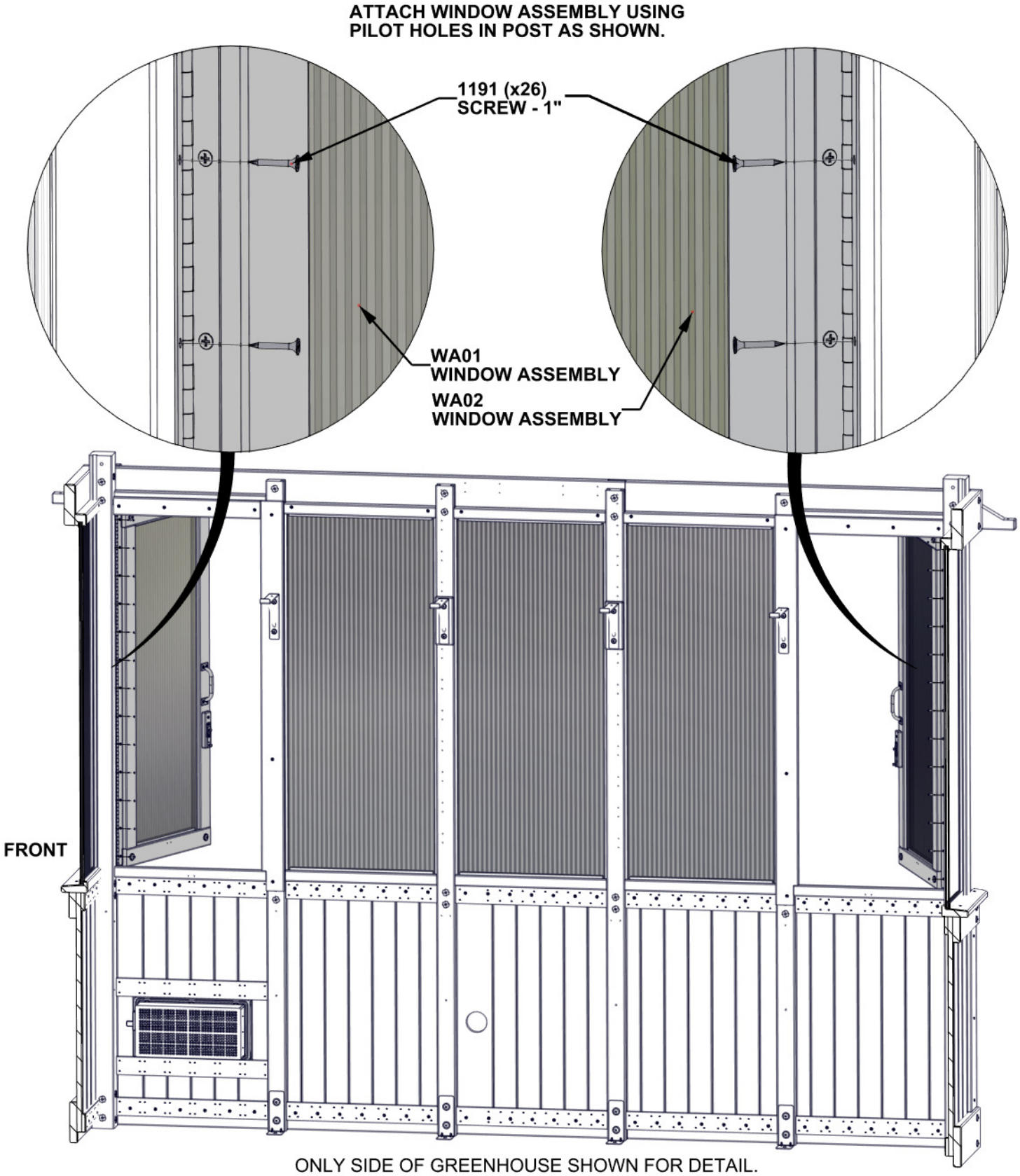

ONLY SIDE OF GREENHOUSE SHOWN FOR DETAIL.

STEP 81 - WINDOW ASSEMBLY

QTY	PART NUMBER	DESCRIPTION
12	H100380	SCREW PFH 8x1 1/8 BLK
4	H100627	SCREW PFH 6x3/4 BLK

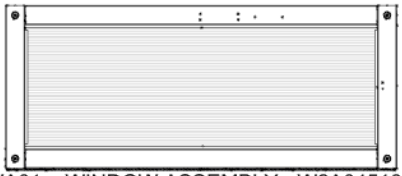

WA01 (x1) WINDOW ASSEMBLY - W2A04518
1 7/8"x19 5/8"x47 3/16" (48x498x1198)

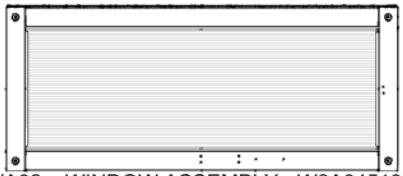

WA02 (x1) WINDOW ASSEMBLY - W2A04519
1 7/8"x19 5/8"x47 3/16" (48x498x1198)

O01 (x2) LATCH BLOCK - W4L20883
1 5/16"x5/8"x4 3/4" (16x34x120)

A4M00559 (x2) PULL HANDLE

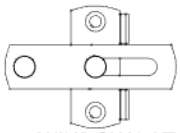

A4M02607 (x2) WINDOW LATCH LOCK

- ALIGN PILOT HOLES
- KEEP OTHER PART OF WINDOW LATCH LOCK AT HAND FOR LATER STEP.

380 (x12)
SCREW - 1 1/8"

0559 (x2)
PULL HANDLE

O01 (x2)
LATCH BLOCK

2607 (x2)
WINDOW LATCH LOCK

627 (x4)
SCREW - 3/4"

WA01 (x1)
WINDOW ASSEMBLY

WA02 (x1)
WINDOW ASSEMBLY

STEP 82 - WINDOW ASSEMBLY

QTY	PART NUMBER	DESCRIPTION
26	H101191	SCREW PFH 6x1 BLK

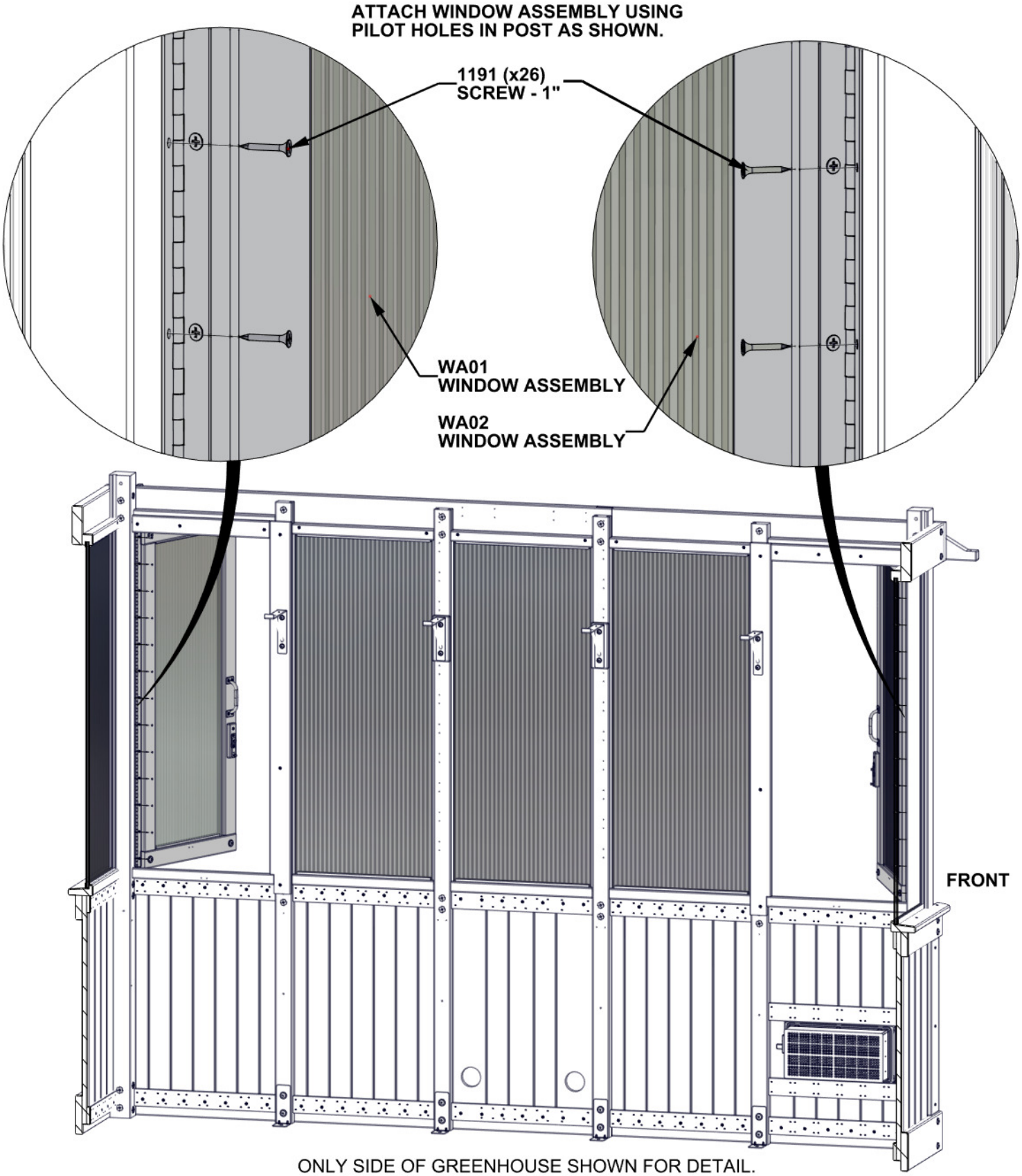

ONLY SIDE OF GREENHOUSE SHOWN FOR DETAIL.

STEP 83 - WINDOW ASSEMBLY

QTY	PART NUMBER	DESCRIPTION
8	H100797	SCREW PWH 8x1 BLK

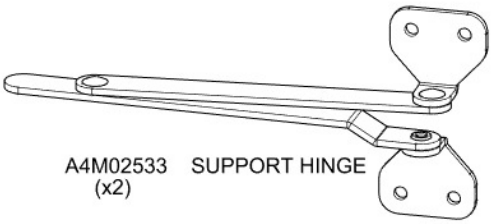

797 (x8)
SCREW - 1"

2533 (x2)
SUPPORT HINGE

ATTACH SUPPORT HINGE USING PILOT HOLES IN WINDOW ASSEMBLY AND WINDOW SILL AS SHOWN.

FRONT

ONLY SIDE OF GREENHOUSE SHOWN FOR DETAIL.

STEP 84 - WINDOW ASSEMBLY

QTY	PART NUMBER	DESCRIPTION
8	H100797	SCREW PWH 8x1 BLK

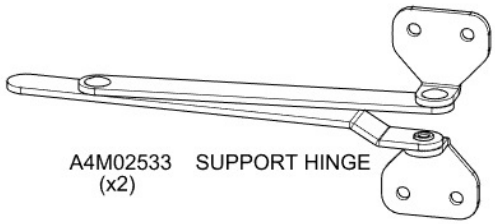

797 (x8)
SCREW - 1"

2533 (x2)
SUPPORT HINGE

ATTACH SUPPORT HINGE USING PILOT HOLES IN WINDOW ASSEMBLY AND WINDOW SILL AS SHOWN.

FRONT

ONLY SIDE OF GREENHOUSE SHOWN FOR DETAIL.

STEP 85 - WINDOW ASSEMBLY

QTY	PART NUMBER	DESCRIPTION
4	H100624	SCREW PFH 6x5/8 BLK

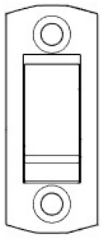

A4M02607 (x2) WINDOW LATCH LOCK

REMAINING PART FROM STEP 79

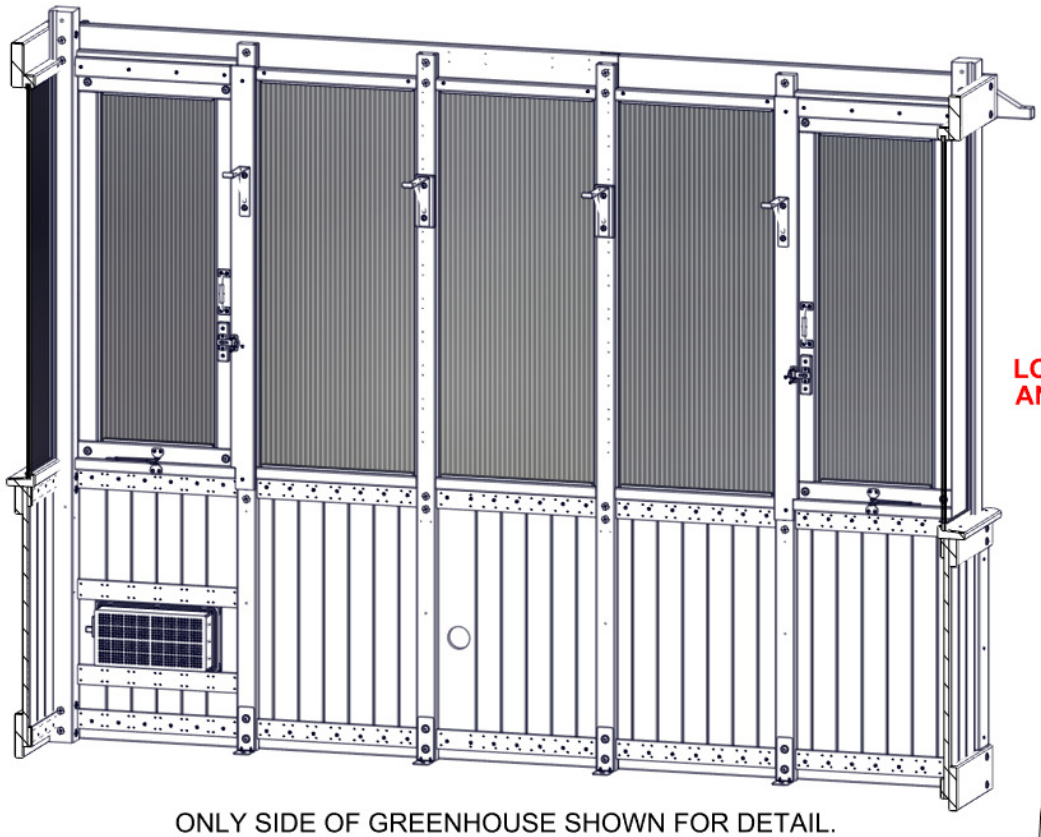

ONLY SIDE OF GREENHOUSE SHOWN FOR DETAIL.

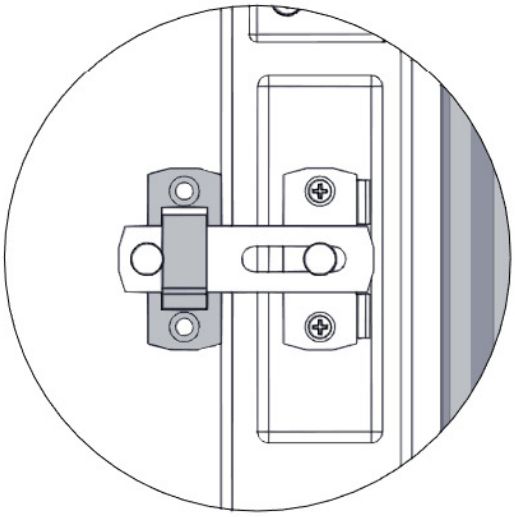

WITH WINDOW CLOSED, ALIGN LATCH LOCK AS SHOWN. MARK HOLE LOCATIONS AND PRE-DRILL WITH 1/8" [2mm] DRILL BIT.

ATTACH LATCH LOCK USING PRE-DRILLED HOLES.

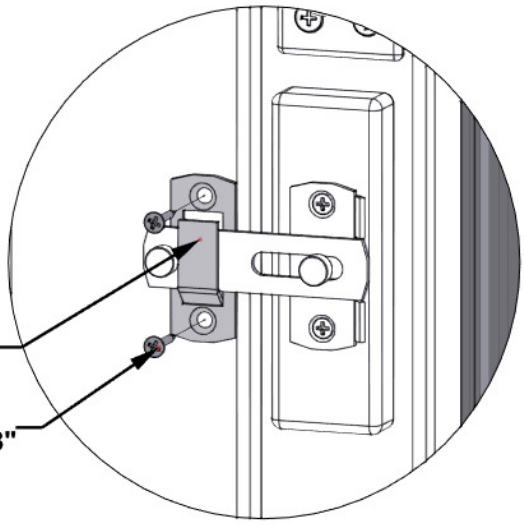

2607 (x2)
WINDOW LATCH LOCK

624 (x4)
SCREW - 5/8"

STEP 86 - WINDOW ASSEMBLY

QTY	PART NUMBER	DESCRIPTION
4	H100624	SCREW PFH 6x5/8 BLK

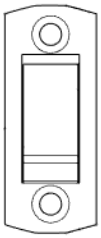

A4M02607 (x2) WINDOW LATCH LOCK

REMAINING PART FROM STEP 81

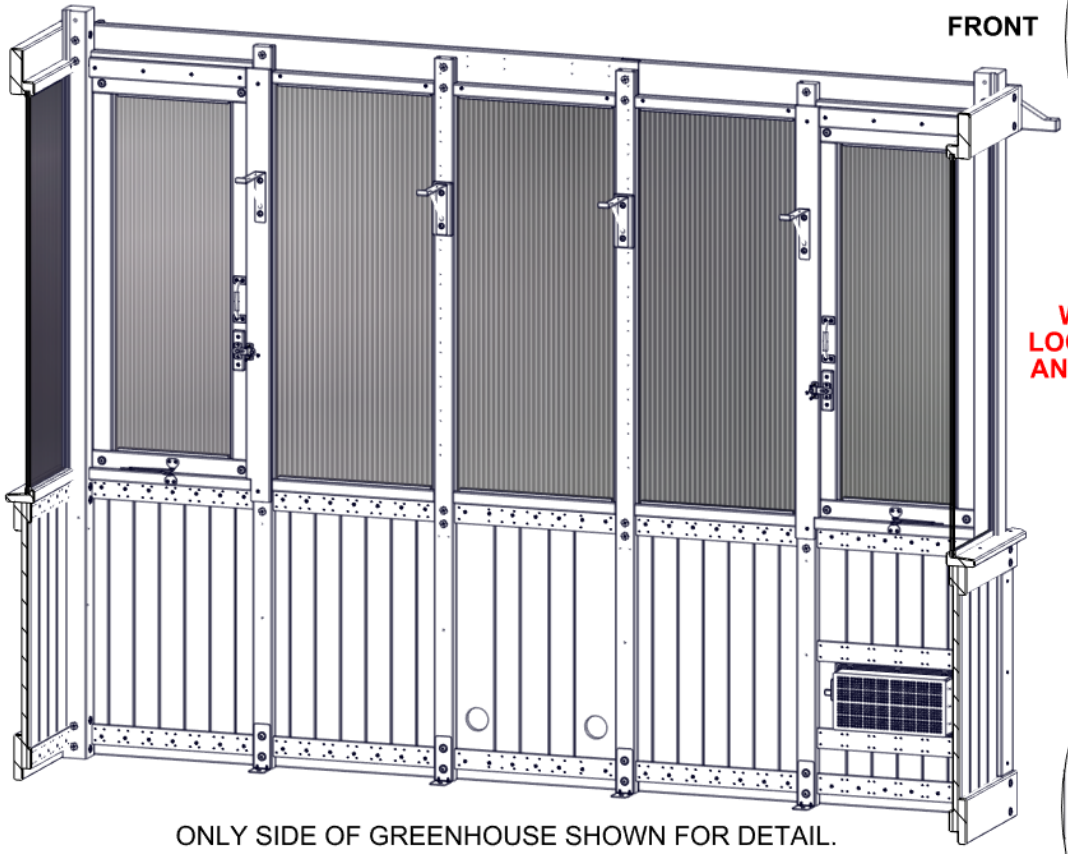

ONLY SIDE OF GREENHOUSE SHOWN FOR DETAIL.

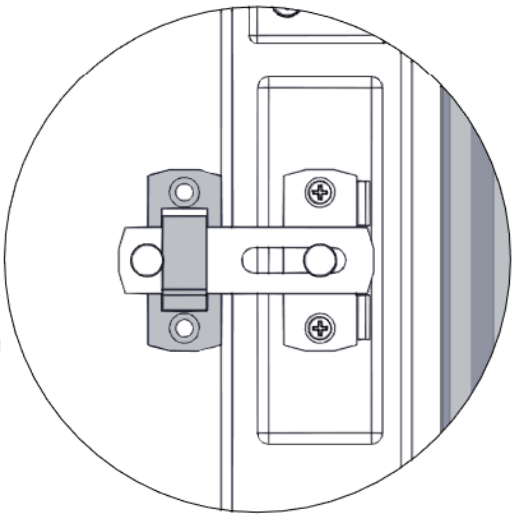

WITH WINDOW CLOSED, ALIGN LATCH LOCK AS SHOWN. MARK HOLE LOCATIONS AND PRE-DRILL WITH 1/8" [2mm] DRILL BIT.

ATTACH LATCH LOCK USING PRE-DRILLED HOLES.

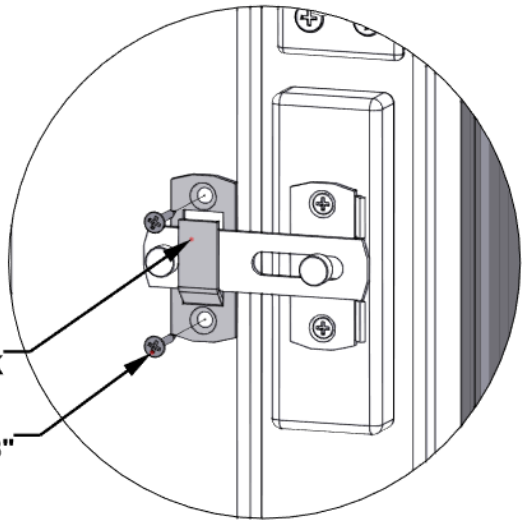

2607 (x2)
WINDOW LATCH LOCK

624 (x4)
SCREW - 5/8"

STEP 87 - WINDOW ASSEMBLY

QTY	PART NUMBER	DESCRIPTION
40	H100200	SCREW PFH 8x1 1/2 BLK

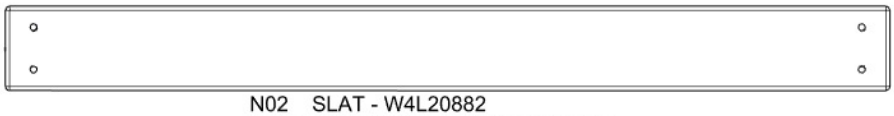

N02 SLAT - W4L20882
(x10) 5/8"x2 3/8"x24 3/4" (16x60x629)

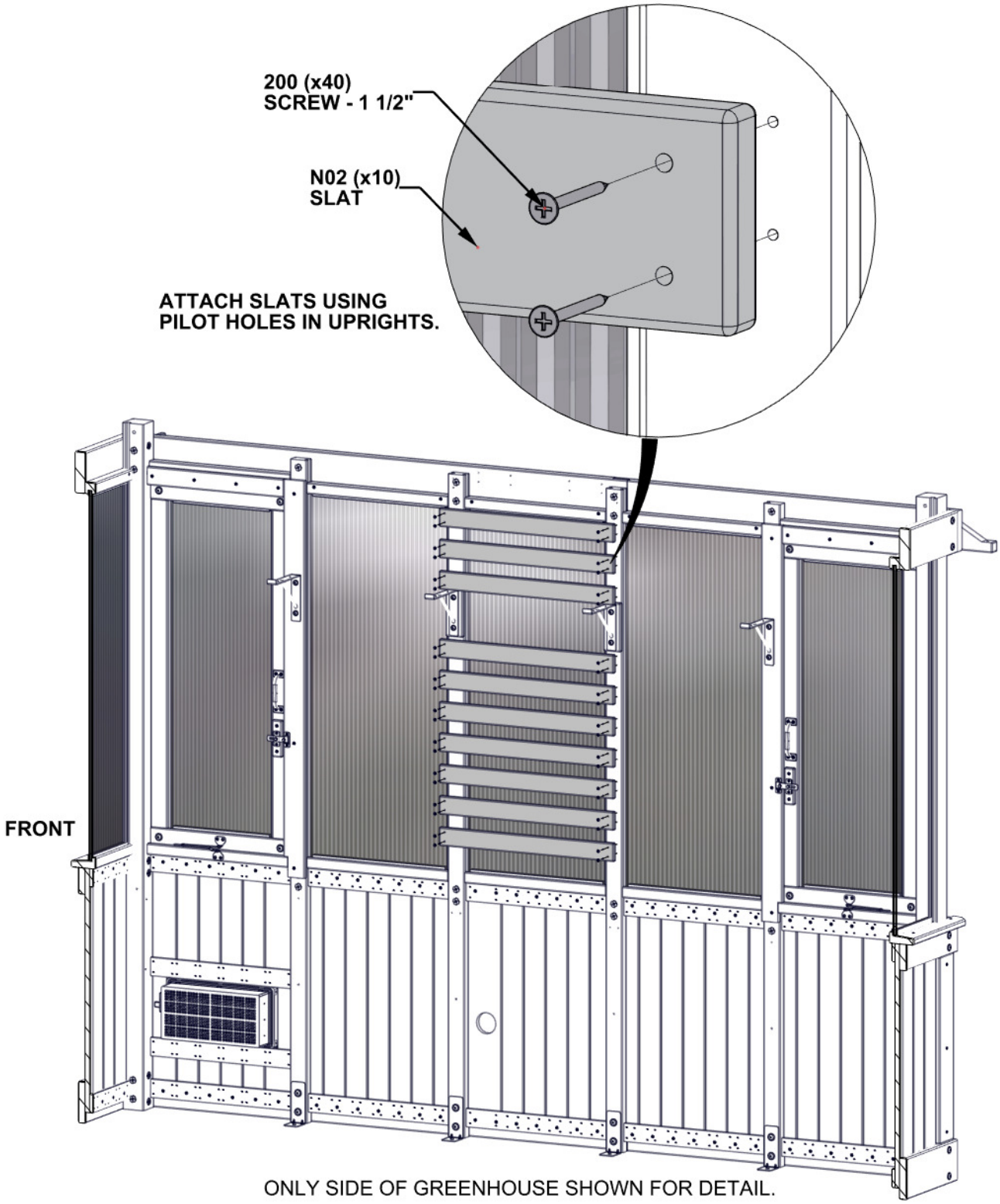

ONLY SIDE OF GREENHOUSE SHOWN FOR DETAIL.

STEP 88 - WINDOW ASSEMBLY

QTY	PART NUMBER	DESCRIPTION
40	H100200	SCREW PFH 8x1 1/2 BLK

N02 SLAT - W4L20882
(x10) 5/8"x2 3/8"x24 3/4" (16x60x629)

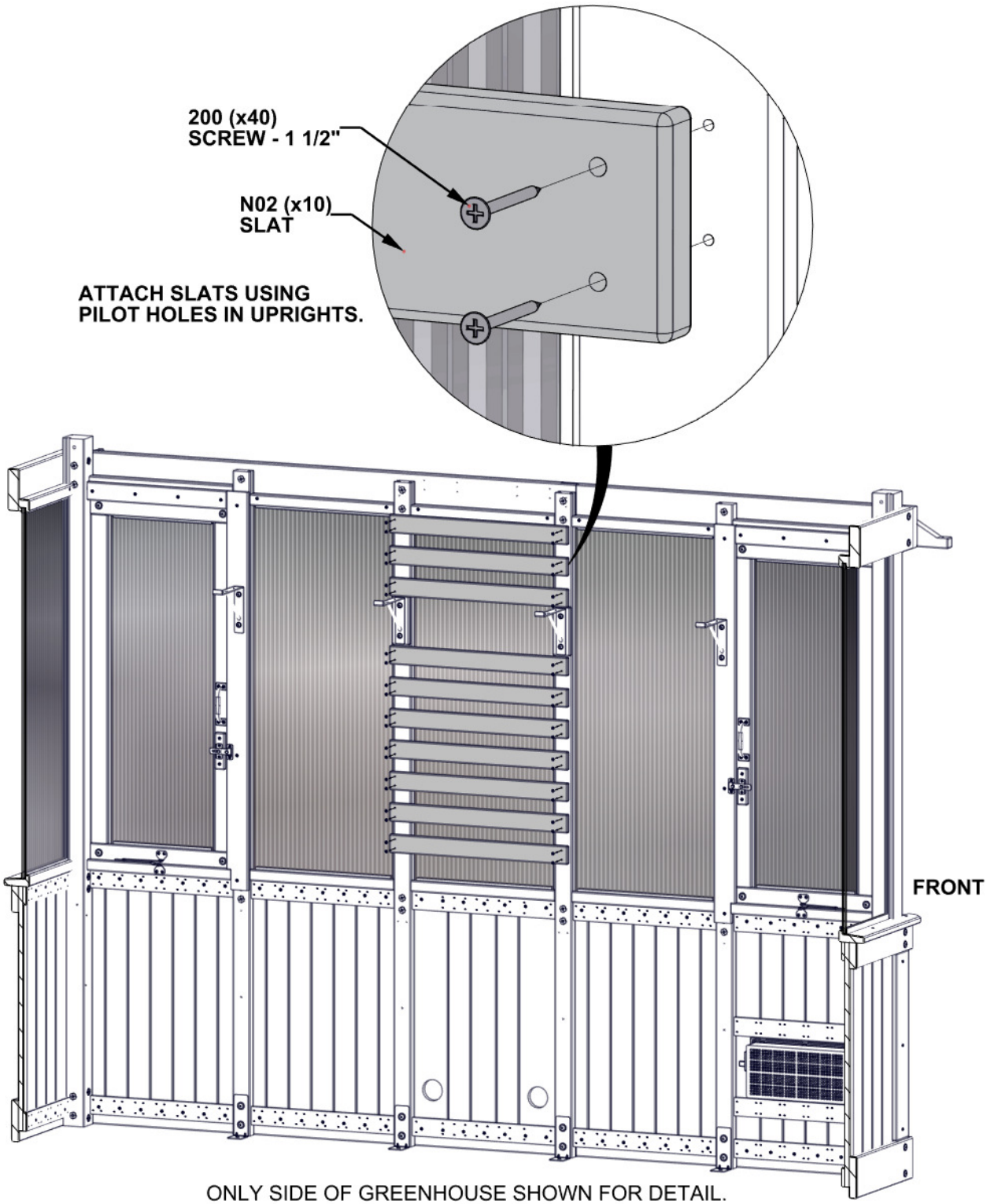

ONLY SIDE OF GREENHOUSE SHOWN FOR DETAIL.

STEP 89 - DOOR ASSEMBLY

QTY	PART NUMBER	DESCRIPTION
10	H100391	SCREW PFH 8x2 BLK

O03 DOOR STOP - W4L21285
(x2) 5/8"x1 5/16"x80 5/16" (16x34x2040)

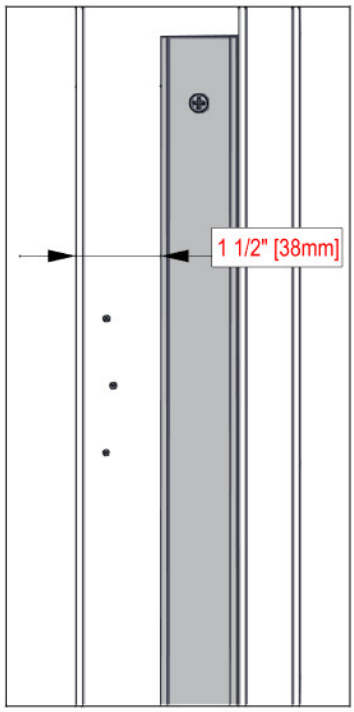

ENSURE DOOR STOP IS 1 1/2" [38mm] FROM FRONT OF POST AS SHOWN.

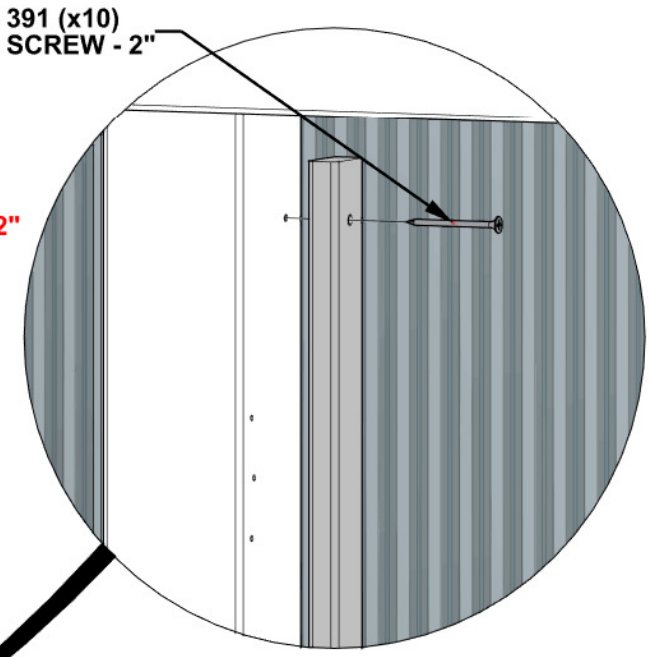

ALIGN PILOT HOLES AND ATTACH AS SHOWN.

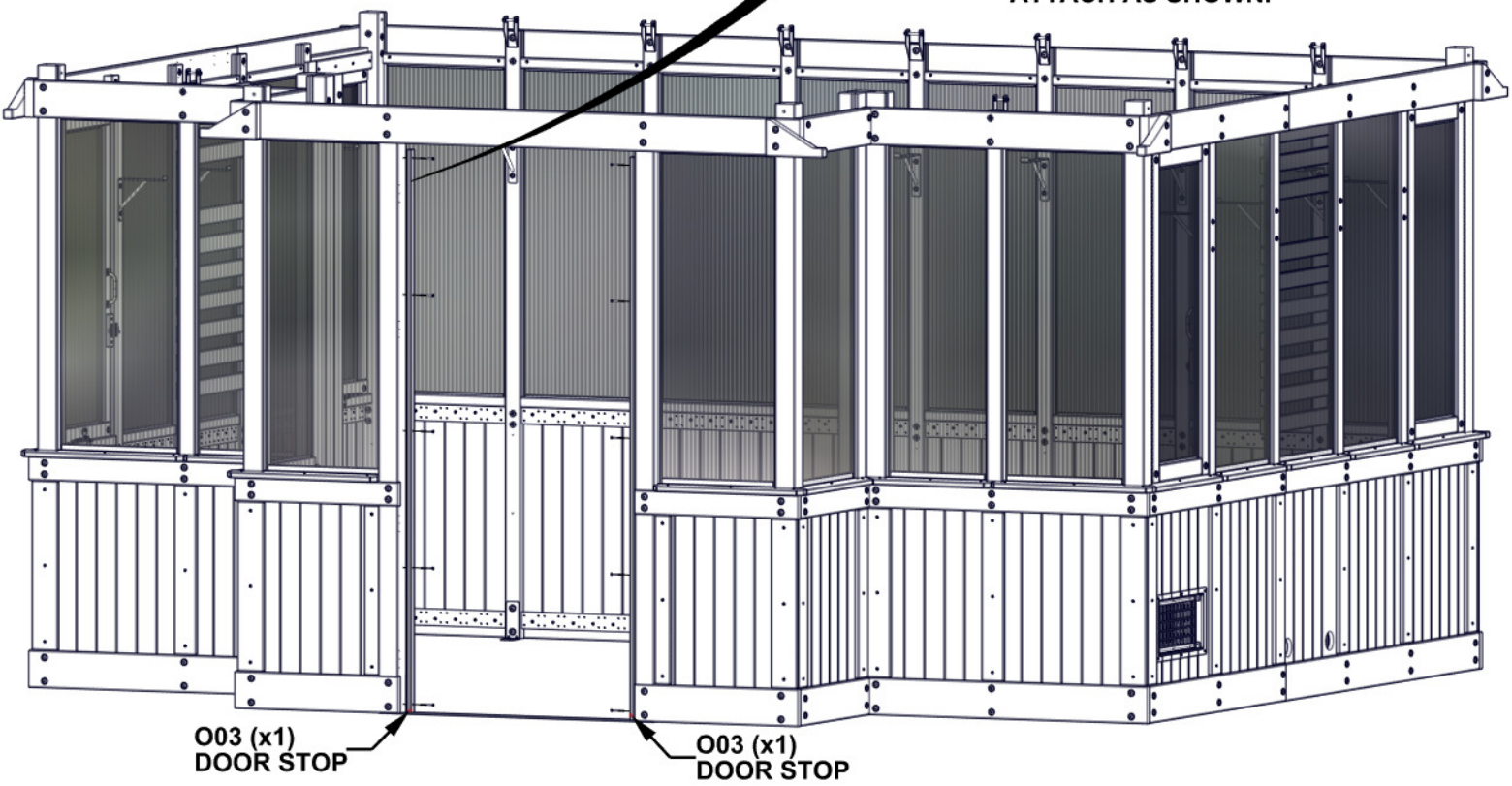

STEP 90 - DOOR ASSEMBLY

QTY	PART NUMBER	DESCRIPTION
3	H100201	SCREW PFH 8x2 1/2 BLK

AA01 DOOR STOP - W4L21284
(x1) 1 7/8"x1 15/16"x37" (47x50x940)

- ALIGN PILOT HOLES AND ATTACH AS SHOWN.
- NOTE THE NOTCH IN AA01 FOR CORRECT ORIENTATION.

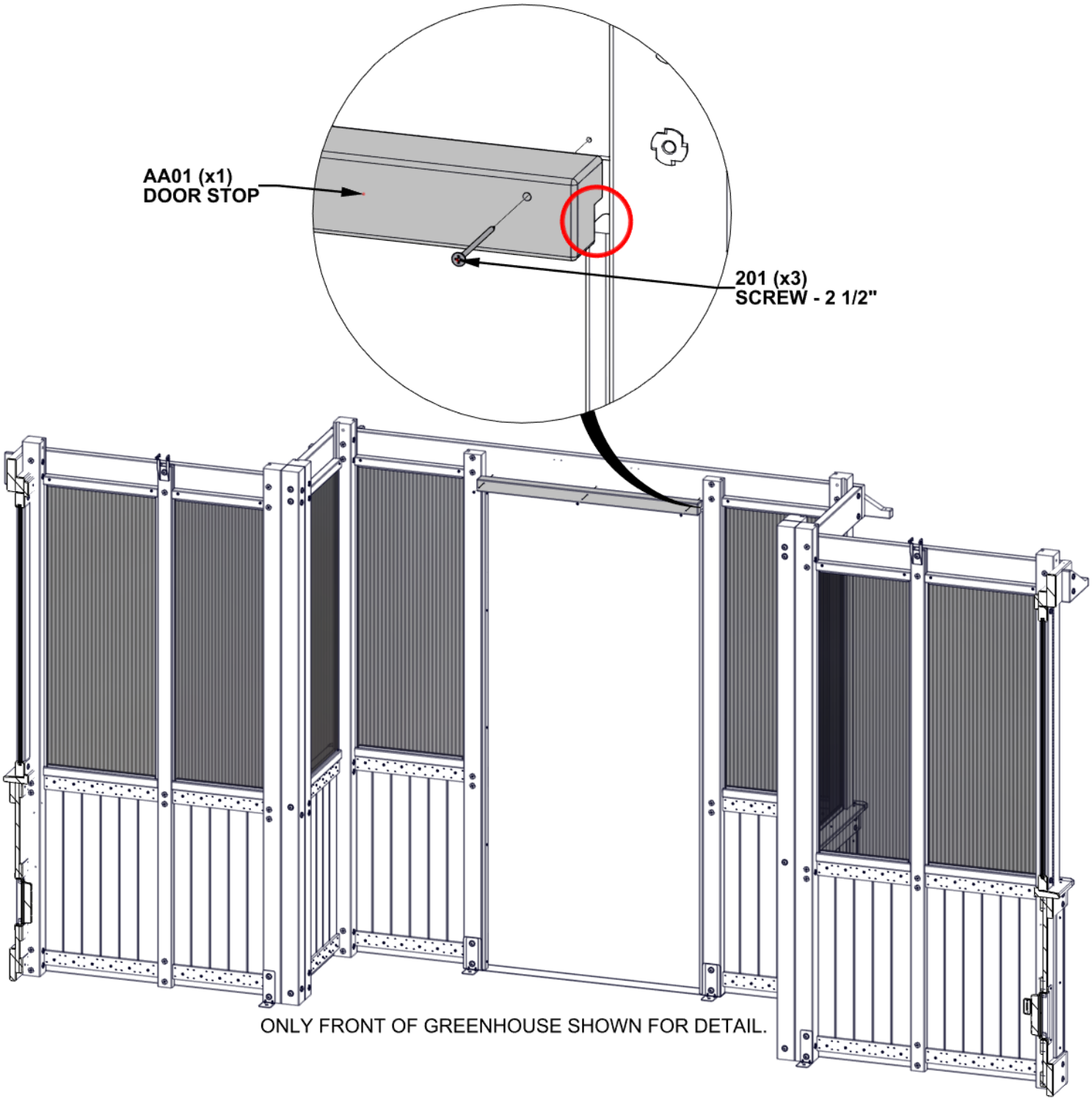

ONLY FRONT OF GREENHOUSE SHOWN FOR DETAIL.

STEP 91 - GABLE ASSEMBLY

QTY	PART NUMBER	DESCRIPTION
24	H100201	SCREW PFH 8x2 1/2 BLK

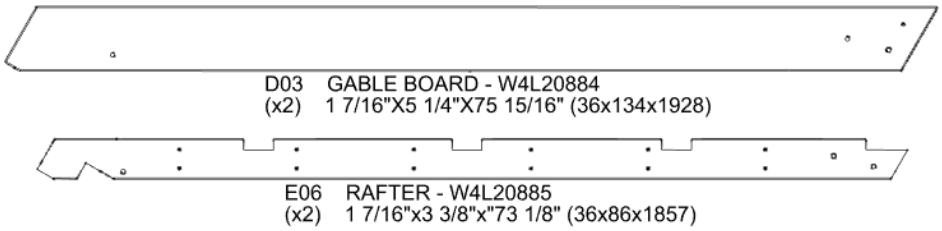

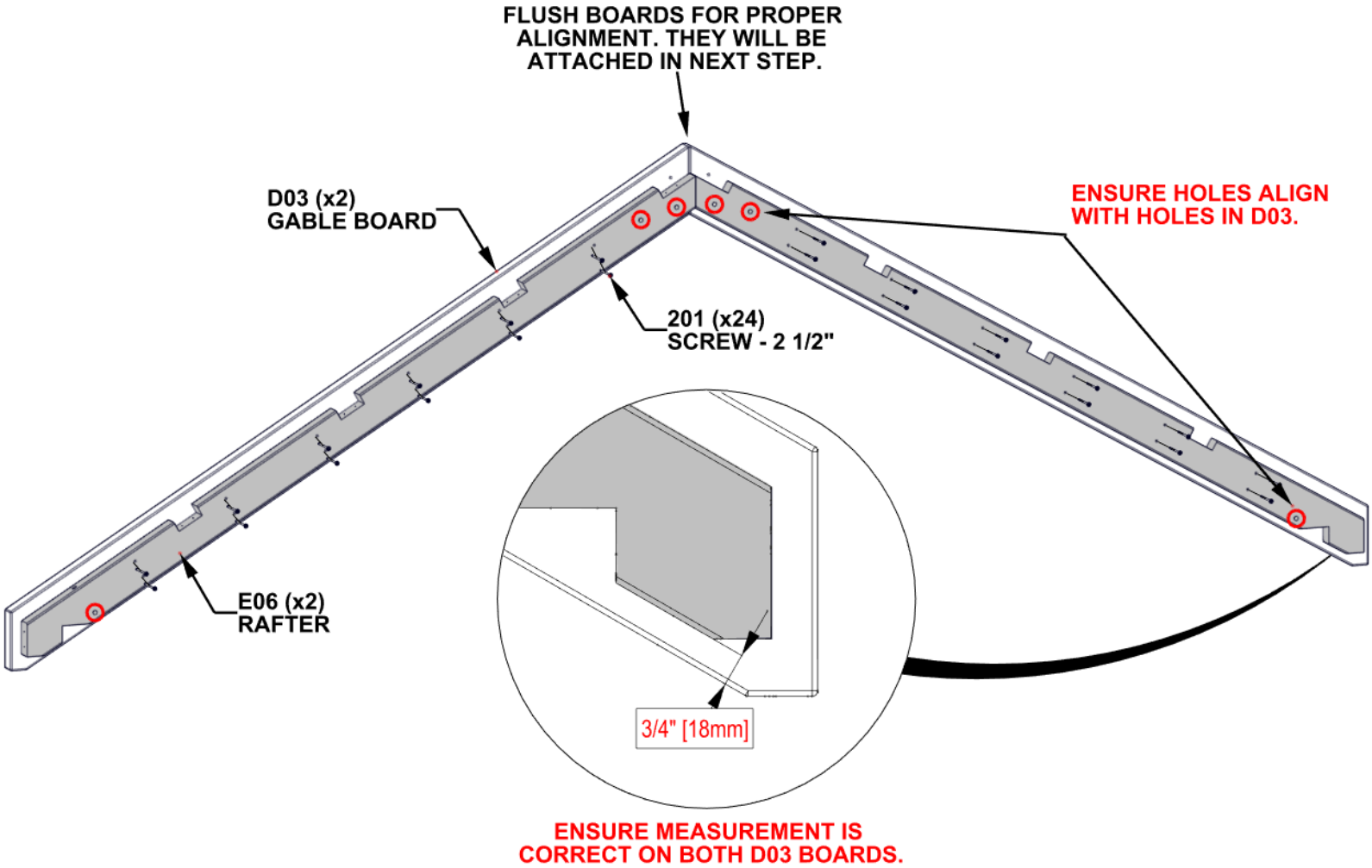

STEP 92 - GABLE ASSEMBLY

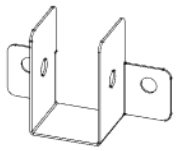

A4M02085 RIDGE CLIP
(x1)

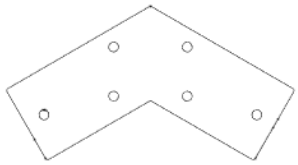

A4M02086 GABLE BRACKET
(x1)

QTY	PART NUMBER	DESCRIPTION
2	H100195	BOLT WH 5/16x2 3/4 BLK
2	H100379	TNUT-5/16" BLK
2	H100471	LAG SCREW WH 5/16x1 1/2 BLK
2	H100478	WASHER FLAT 8x27 BLK
2	H100479	NUT LOCK 5/16 BLK
2	H100503	BOLT WH 5/16x3 1/2 BLK

- INSERT T-NUTS FIRST.

- ATTACH GABLES WITH GABLE BRACKET AS SHOWN.
- NOTE CORRECT ORIENTATION OF RIDGE CLIP.

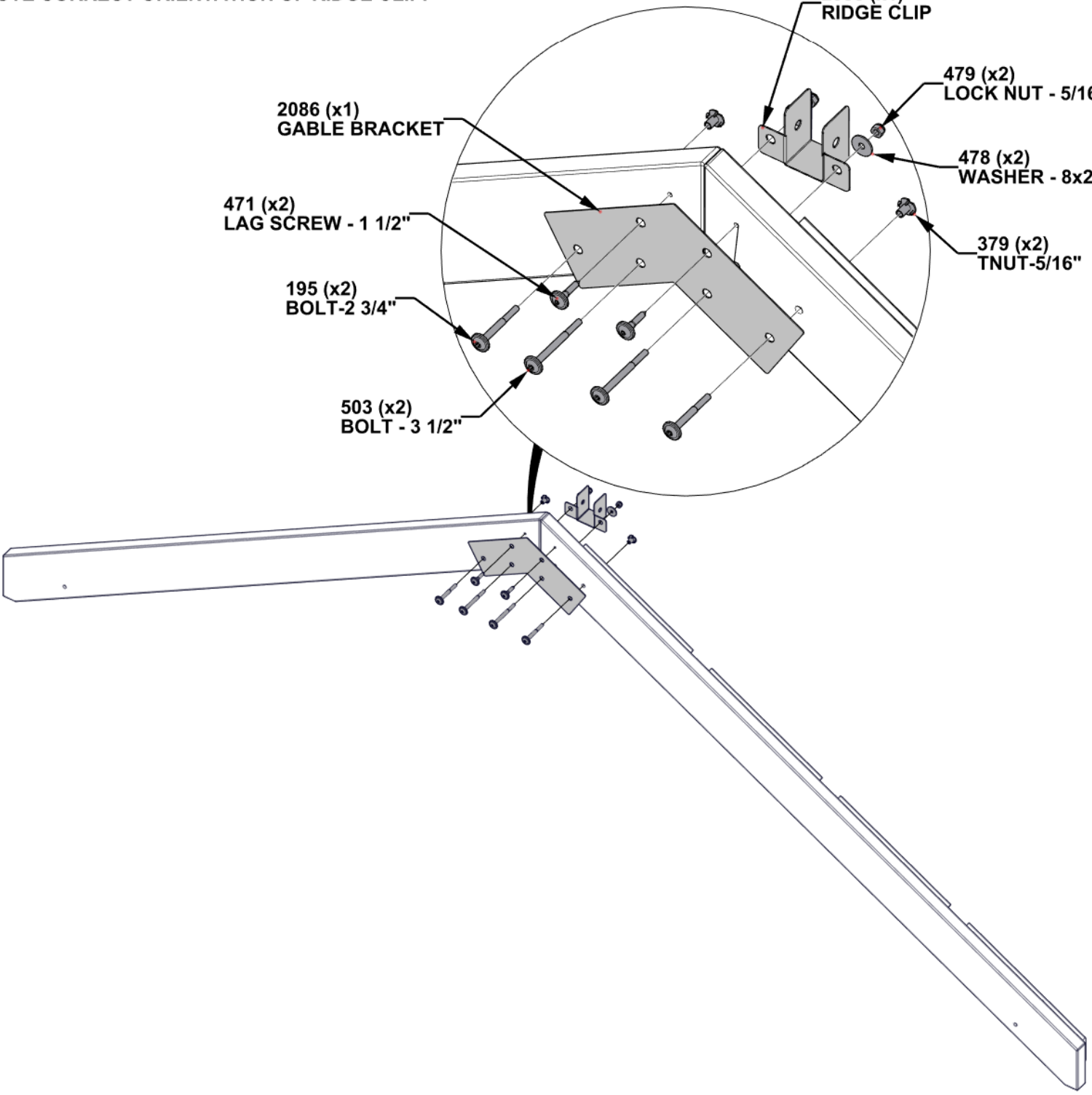

REPEAT STEPS 91 & 92 FOR SECOND GABLE ASSEMBLY

STEP 93 - GABLE ASSEMBLY

QTY	PART NUMBER	DESCRIPTION
4	H100198	WASHER LOCK EXT 8x19
4	H100379	TNUT-5/16" BLK
4	H100405	WASHER LOCK EXT 6x15
4	H100456	LAG SCREW WH 1/4x2 1/2 BLK
4	H100777	SCREW PFH 10x3 1/2 BLK
4	H100974	BOLT WH 5/16x5 3/4 BLK

INSERT T-NUTS FIRST.

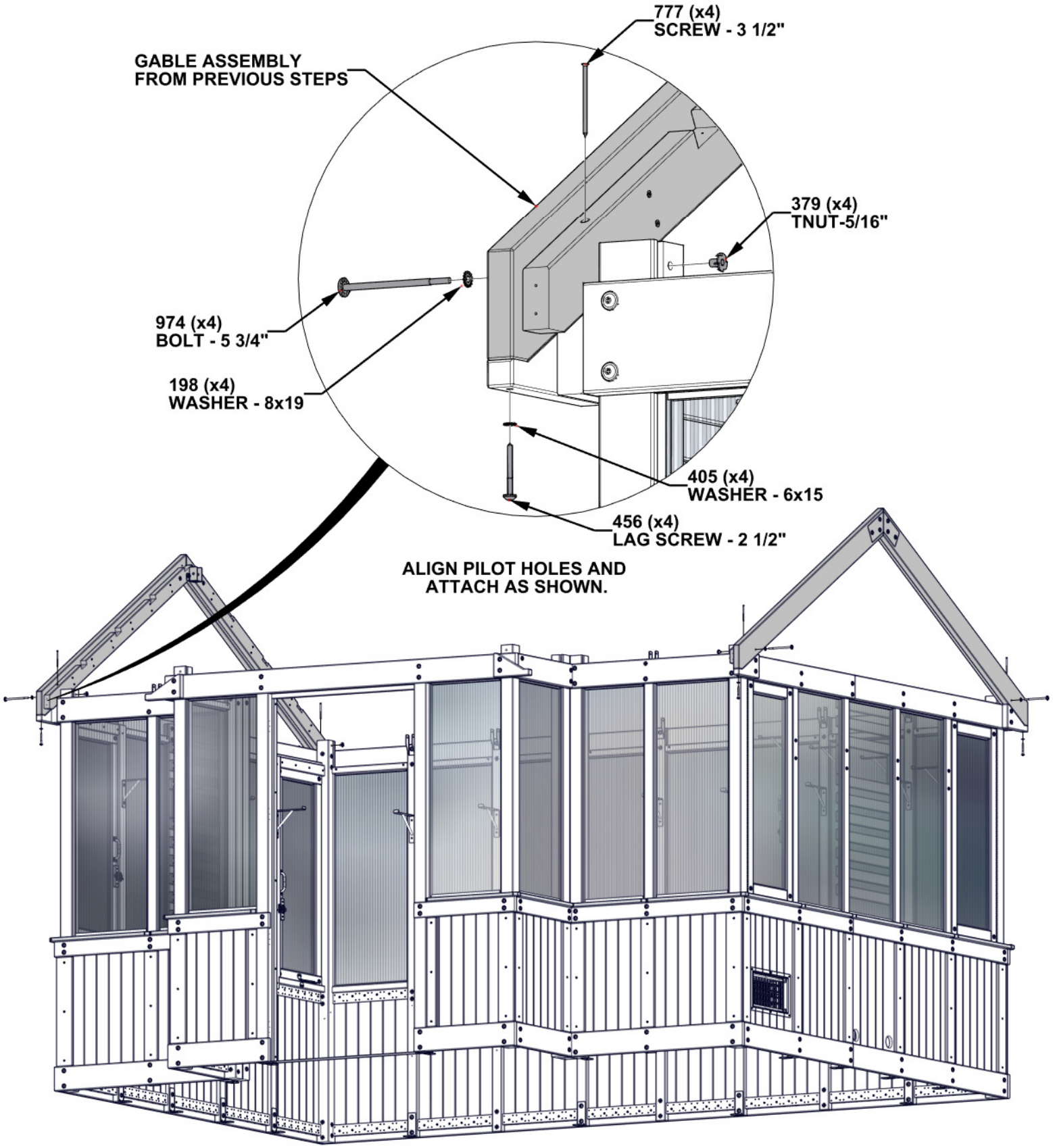

STEP 94 - GABLE ASSEMBLY

QTY	PART NUMBER	DESCRIPTION
12	H100385	SCREW PFH 8x1 BLK

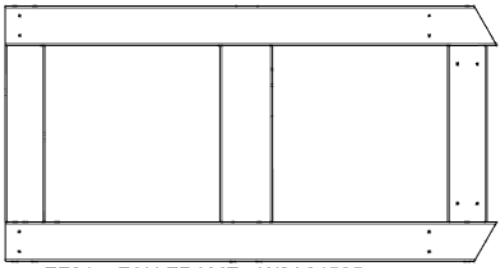

FF01 (x1) FAN FRAME - W2A04525
1 7/16"x15 1/4"x29 7/16" (36x388x748)

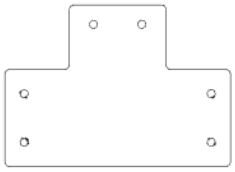

A4M02099 (x4) T-CLEAT

- USE PILOT HOLES IN FAN FRAME TO ATTACH T-CLEATS.

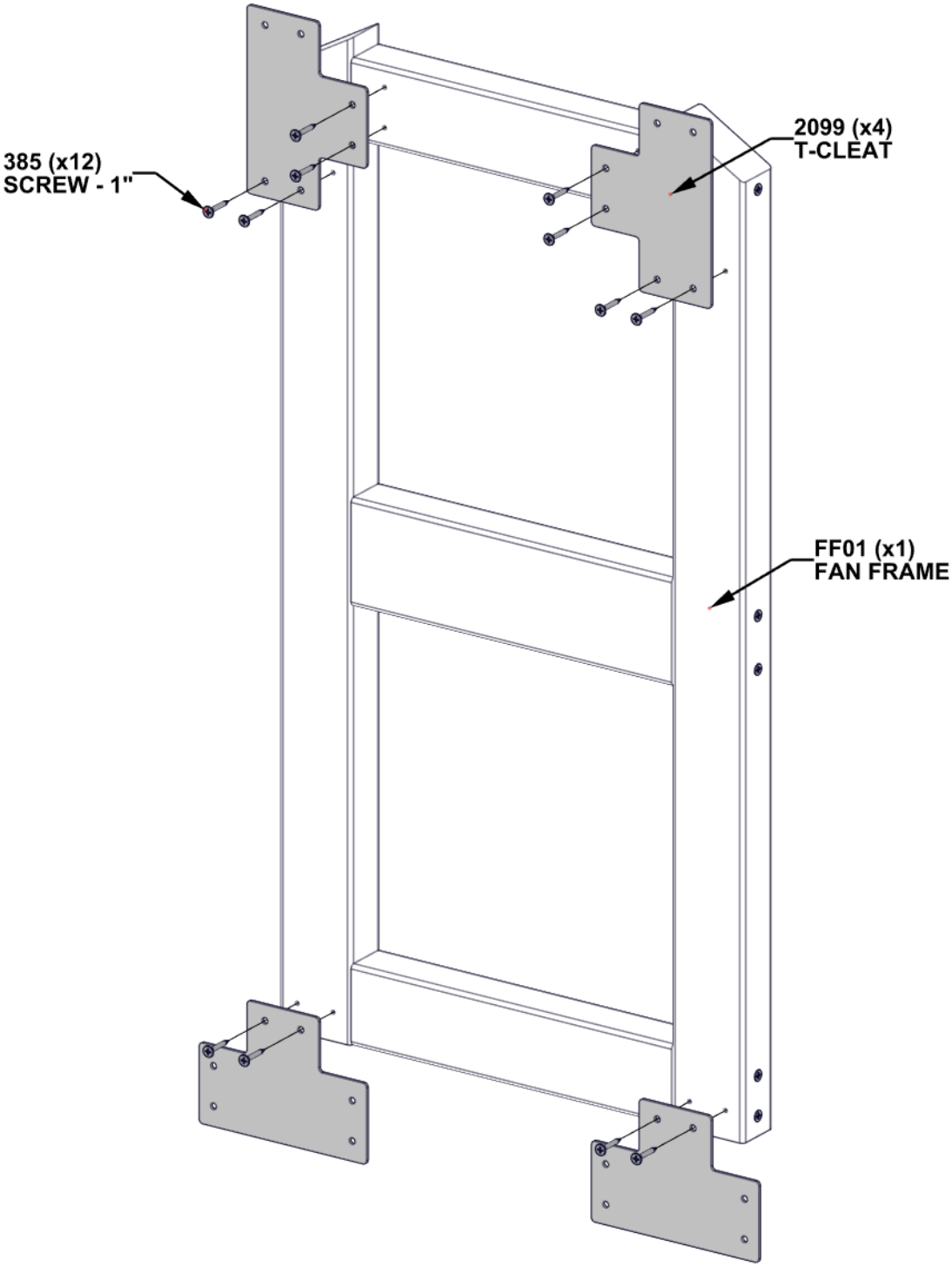

STEP 95 - GABLE ASSEMBLY

QTY	PART NUMBER	DESCRIPTION
4	H100200	SCREW PFH 8x1 1/2 BLK
12	H100385	SCREW PFH 8x1 BLK

N02 SLAT - W4L20882
(x1) 5/8"x2 3/8"x24 3/4" (16x60x629)

1) INSTALL FAN FRAME ASSEMBLY FIRST
- **ALIGN PILOT HOLES IN HEADER WITH BOTTOM CLEAT HOLES.**
- **CENTER TOP OF FAN FRAME BETWEEN RAFTERS.**
- **USE TOP CLEAT HOLES AS A GUIDE TO DRILL PILOT HOLES IN GABLE USING 1/8" [3mm] DRILL BIT.**
- **ATTACH AS SHOWN**

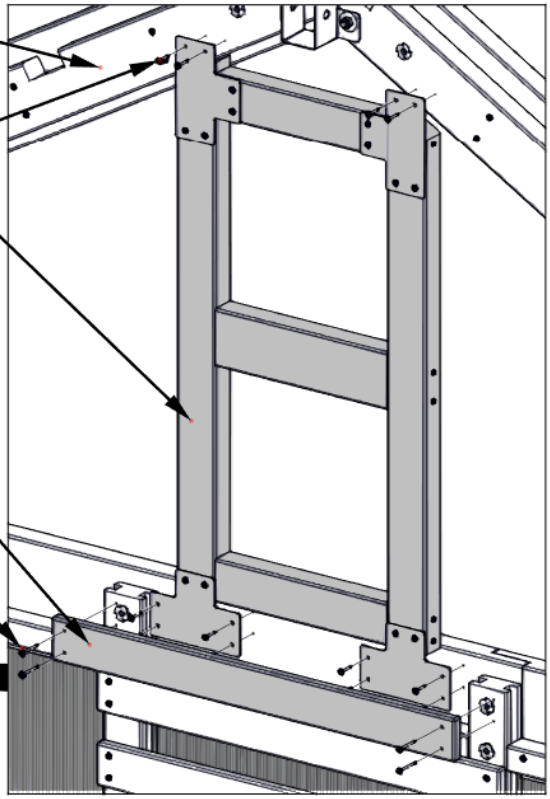

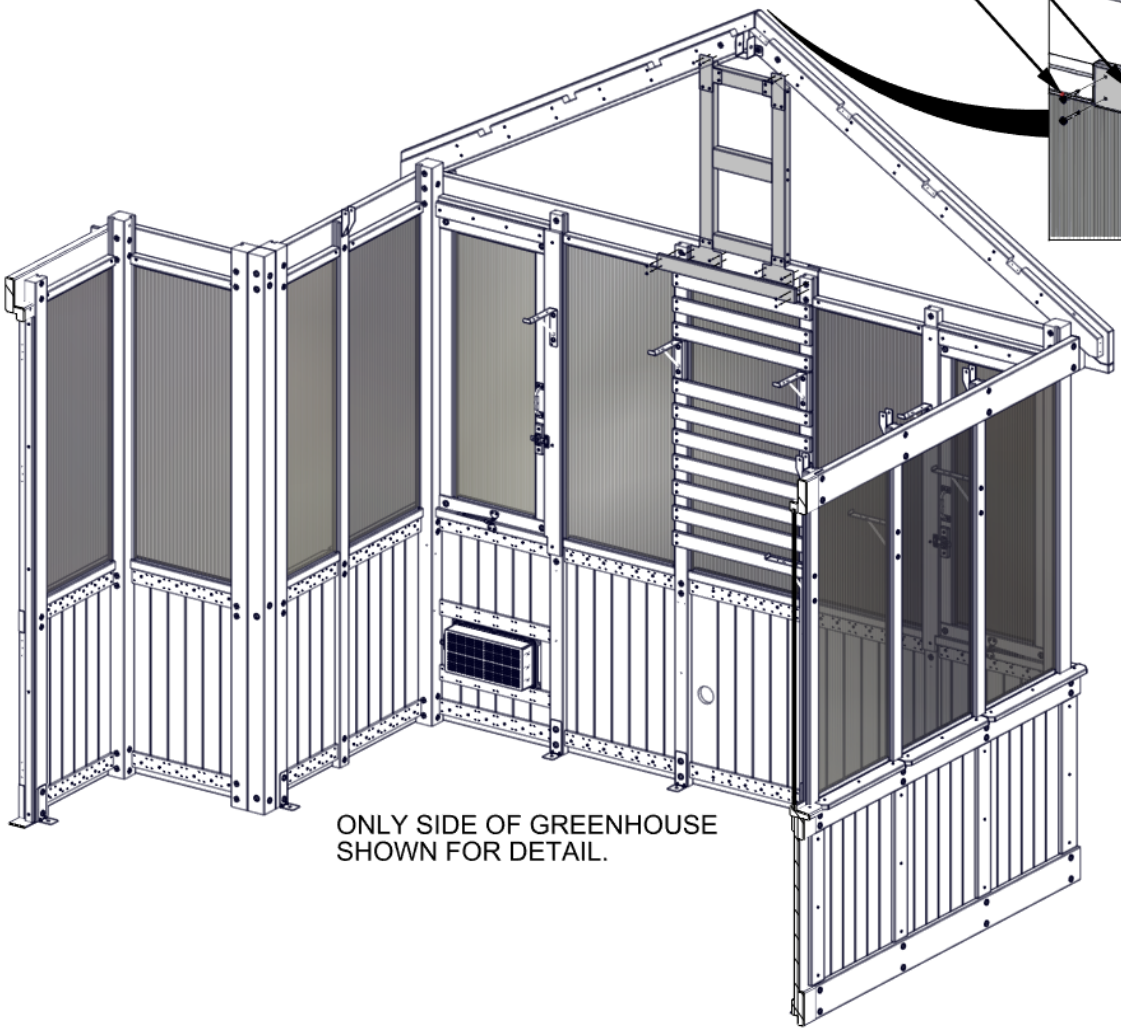

ONLY SIDE OF GREENHOUSE
SHOWN FOR DETAIL.

STEP 96 - GABLE ASSEMBLY

QTY	PART NUMBER	DESCRIPTION
14	H100200	SCREW PFH 8x1 1/2 BLK

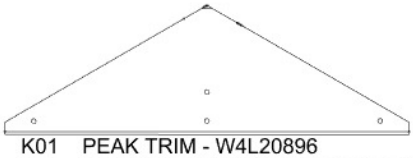

K01 PEAK TRIM - W4L20896
(x1) 5/8"x5 1/4"x16 9/16" (16x134x420)

M03 FAN TRIM - W4L20900
(x1) 5/8"x3"x16 9/16" (16x76x420)

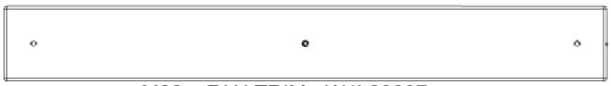

M02 FAN TRIM - W4L20897
(x2) 5/8"x3"x24 1/16" (16x76x611)

M04 FAN TRIM - W4L20909
(x1) 5/8"c3 1/8"c10 1/2" (16x80x266)

- ALIGN PILOT HOLES AND ATTACH AS SHOWN.

K01 (x1) PEAK TRIM

M04 (x1) FAN TRIM

200 (x14) SCREW - 1 1/2"

M02 (x2) FAN TRIM

M03 (x1) FAN TRIM

STEP 97 - GABLE ASSEMBLY

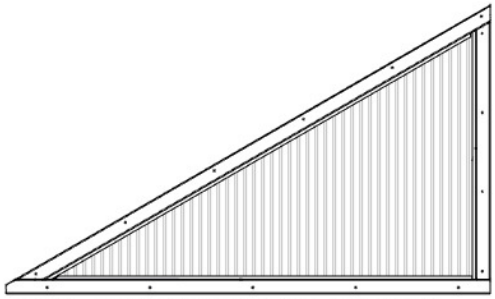

WA03 (x1) WINDOW ASSEMBLY - W2A04520
1 7/16"x28 1/16"x47 1/16" (36x713x1196)

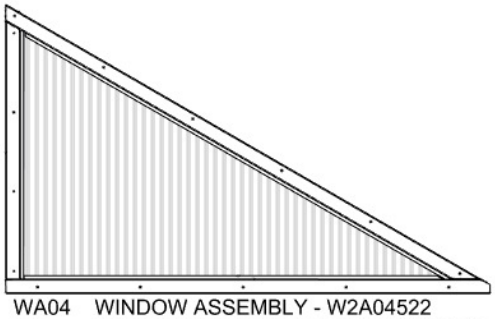

WA04 (x1) WINDOW ASSEMBLY - W2A04522
1 7/16"x28 1/16"x47 1/16" (36x713x1196)

- SLIDE WINDOW ASSEMBLIES INTO OPENINGS UNTIL THEY CONTACT GABLE BOARDS.

WA03 (x1)
WINDOW ASSEMBLY

WA04 (x1)
WINDOW ASSEMBLY

ONLY SIDE OF GREENHOUSE SHOWN FOR DETAIL.

GABLE BOARD

WINDOWS WILL BE FLUSH WITH THE HEADER.

STEP 98 - GABLE ASSEMBLY

QTY	PART NUMBER	DESCRIPTION
64	H100382	SCREW PFH 8x1 3/4 BLK

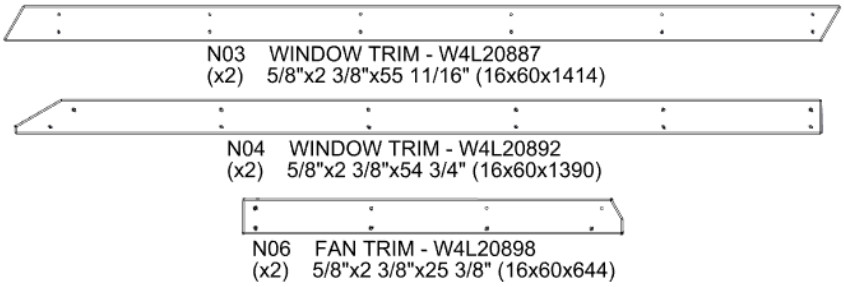

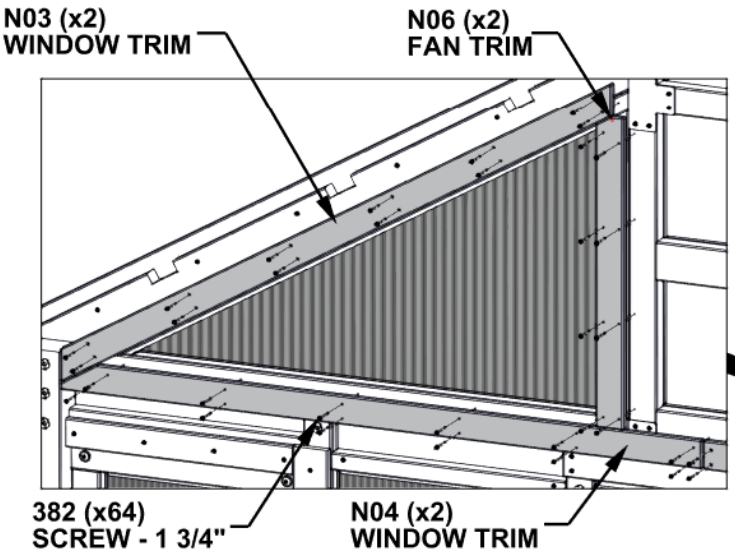

- TWO ADULTS REQUIRED FOR THIS STEP: ONE TO HOLD WINDOW IN PLACE. ONE TO ATTACH TRIM.
- INSTALL N06 BOARDS FIRST BY ALIGNING THROUGH HOLES IN BOARD WITH PILOT HOLES IN WINDOW ASSEMBLY.
- REMAINING BOARDS BUTT UP AGAINST N06 AND ARE FLUSH ON THE OUTSIDE AS SHOWN.
- ALIGN HOLES ON N03 AND N04 WITH PILOT HOLES IN WINDOW AND ATTACH.
- USE AN 1/8" [3mm] DRILL BIT WITH N03, N04, & N06 AS GUIDES TO DRILL PILOT HOLES WHEN NEEDED.
- ATTACH WITH REMAINING HARDWARE.

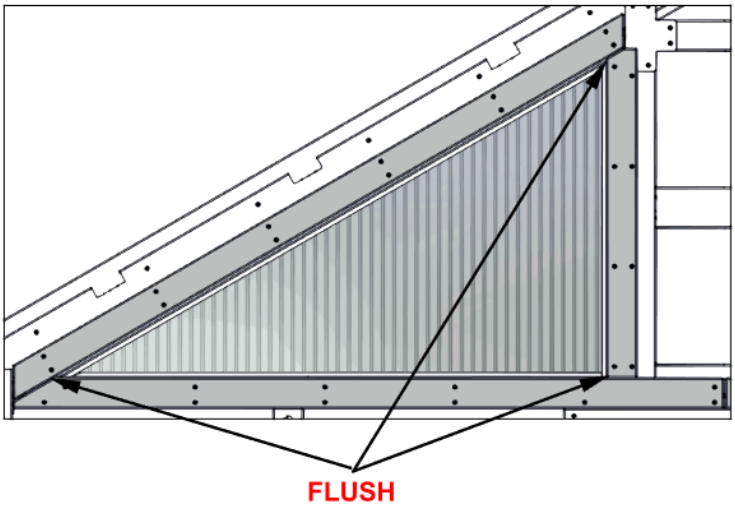

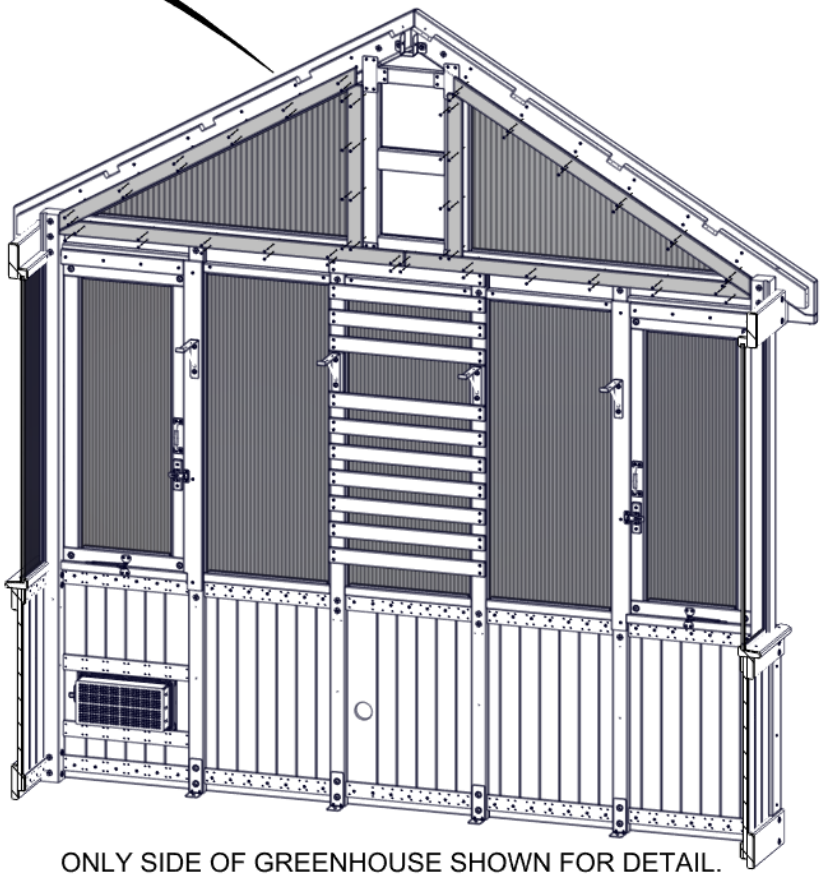

ONLY SIDE OF GREENHOUSE SHOWN FOR DETAIL.

STEP 99 - GABLE ASSEMBLY

QTY	PART NUMBER	DESCRIPTION
16	H101207	SCREW PWH 8x15x7/8 BLK

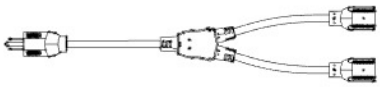

A6P01160 CORD SPLITTER
(x1)

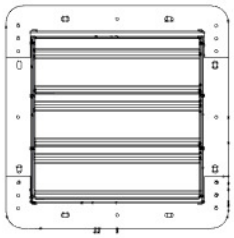

A4M02383 EXHAUST FAN
(x2)

- CENTER EXHAUST FANS IN THE OPENINGS AND ATTACH AS SHOWN.
- CHORD SPLITTER IS USED TO POWER FANS.

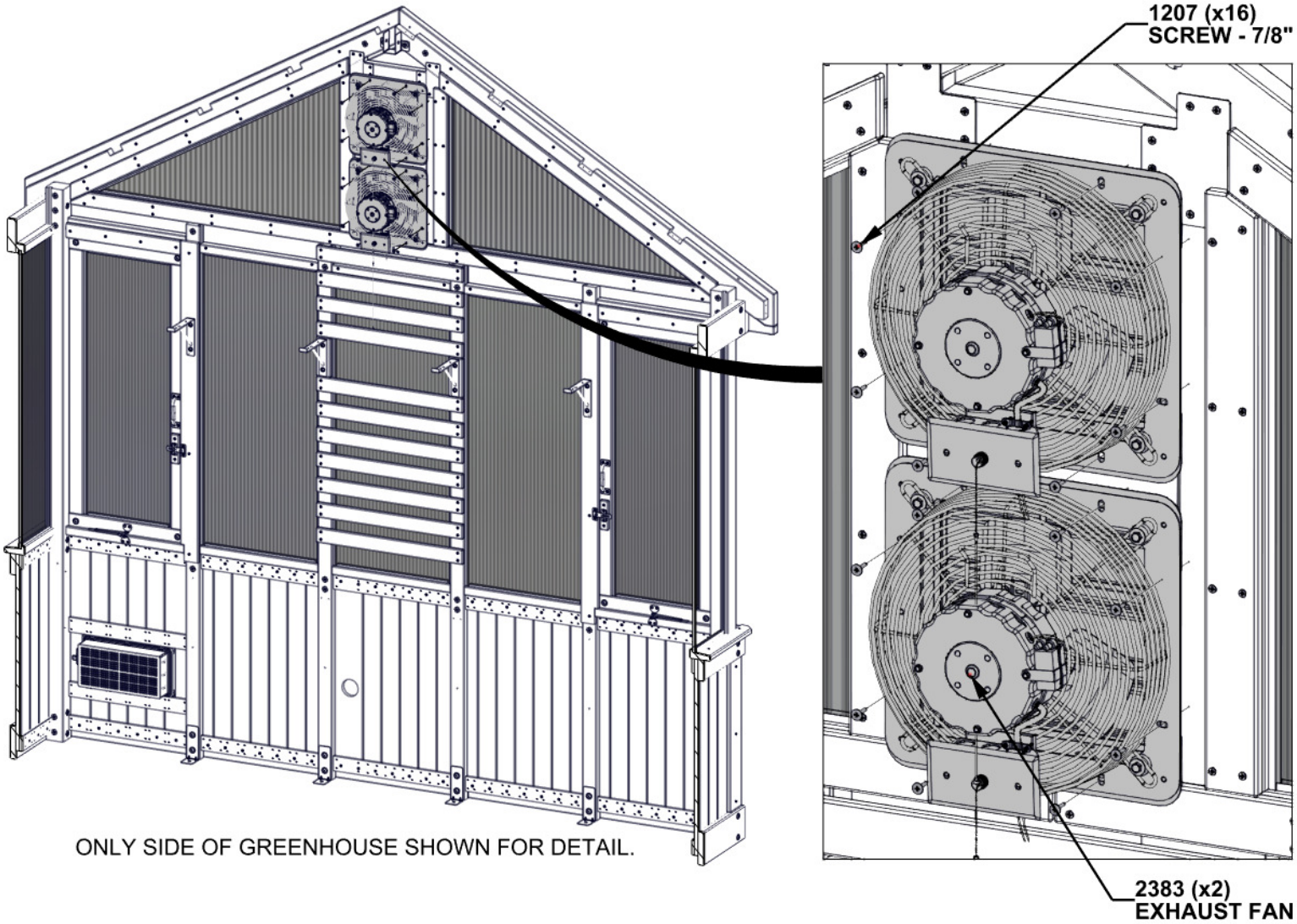

ONLY SIDE OF GREENHOUSE SHOWN FOR DETAIL.

STEP 100 - GABLE ASSEMBLY

QTY	PART NUMBER	DESCRIPTION
12	H100385	SCREW PFH 8x1 BLK

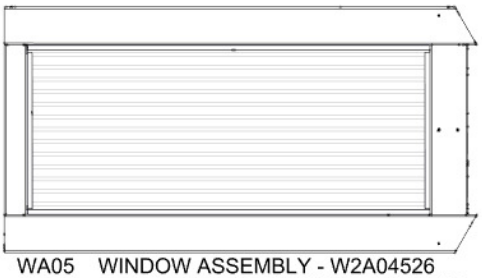

WA05 (x1) WINDOW ASSEMBLY - W2A04526
1 7/16"x15 1/4"x29 7/16" (36x388x747)

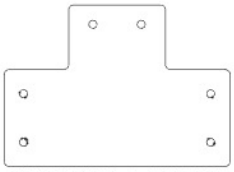

A4M02099 (x4) T-CLEAT

- USE PILOT HOLES IN WINDOW ASSEMBLY TO ATTACH T-CLEATS.

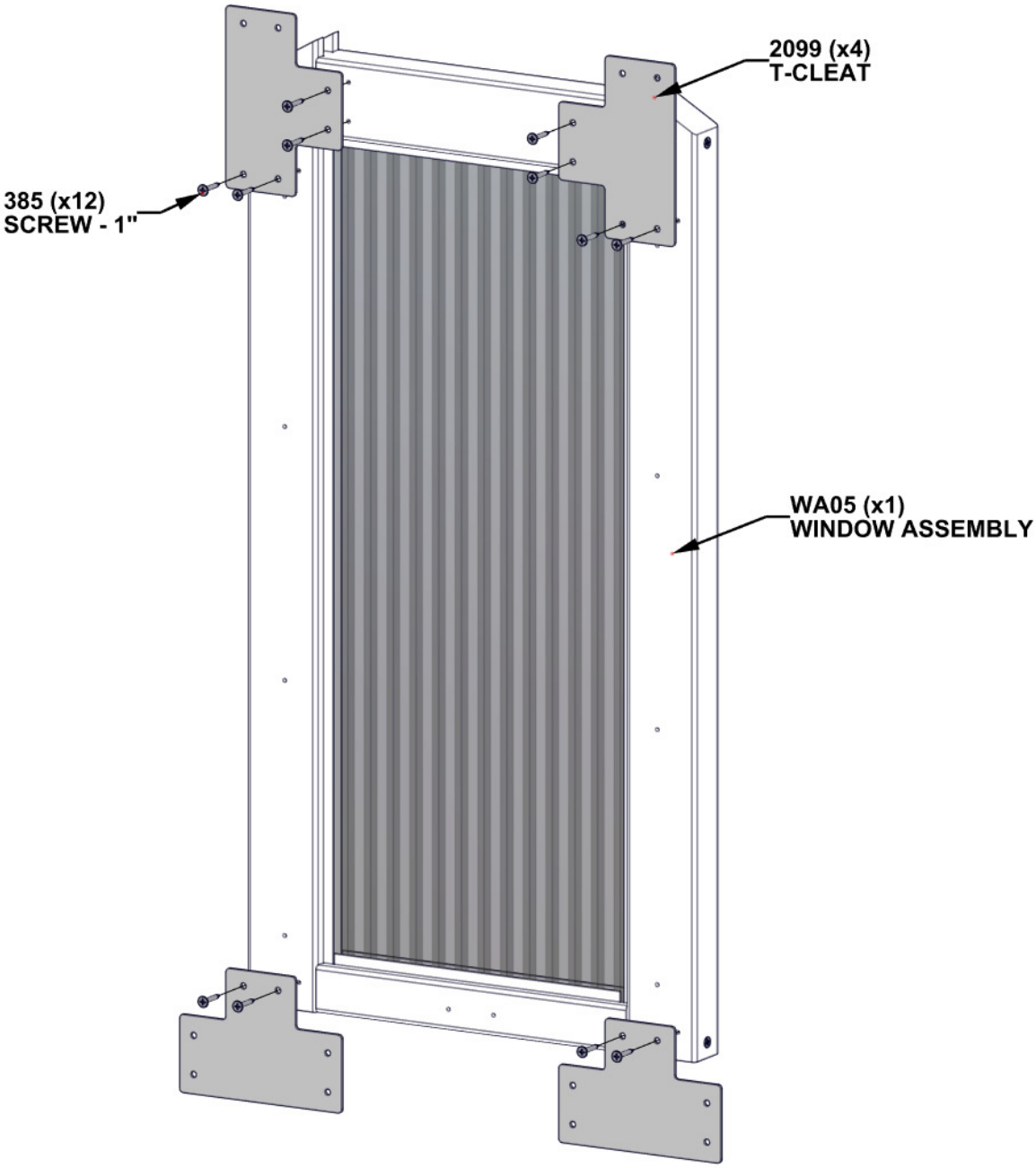

STEP 101 - GABLE ASSEMBLY

QTY	PART NUMBER	DESCRIPTION
4	H100200	SCREW PFH 8x1 1/2 BLK
12	H100385	SCREW PFH 8x1 BLK

N02 SLAT - W4L20882
(x1) 5/8"x2 3/8"x24 3/4" (16x60x629)

1) INSTALL WINDOW ASSEMBLY FIRST
- ALIGN PILOT HOLES IN HEADER WITH BOTTOM CLEAT HOLES.
- CENTER TOP OF FAN FRAME BETWEEN RAFTERS.
- USE TOP CLEAT HOLES AS A GUIDE TO DRILL PILOT HOLES IN GABLE USING 1/8" [3mm] DRILL BIT.
- ATTACH AS SHOWN

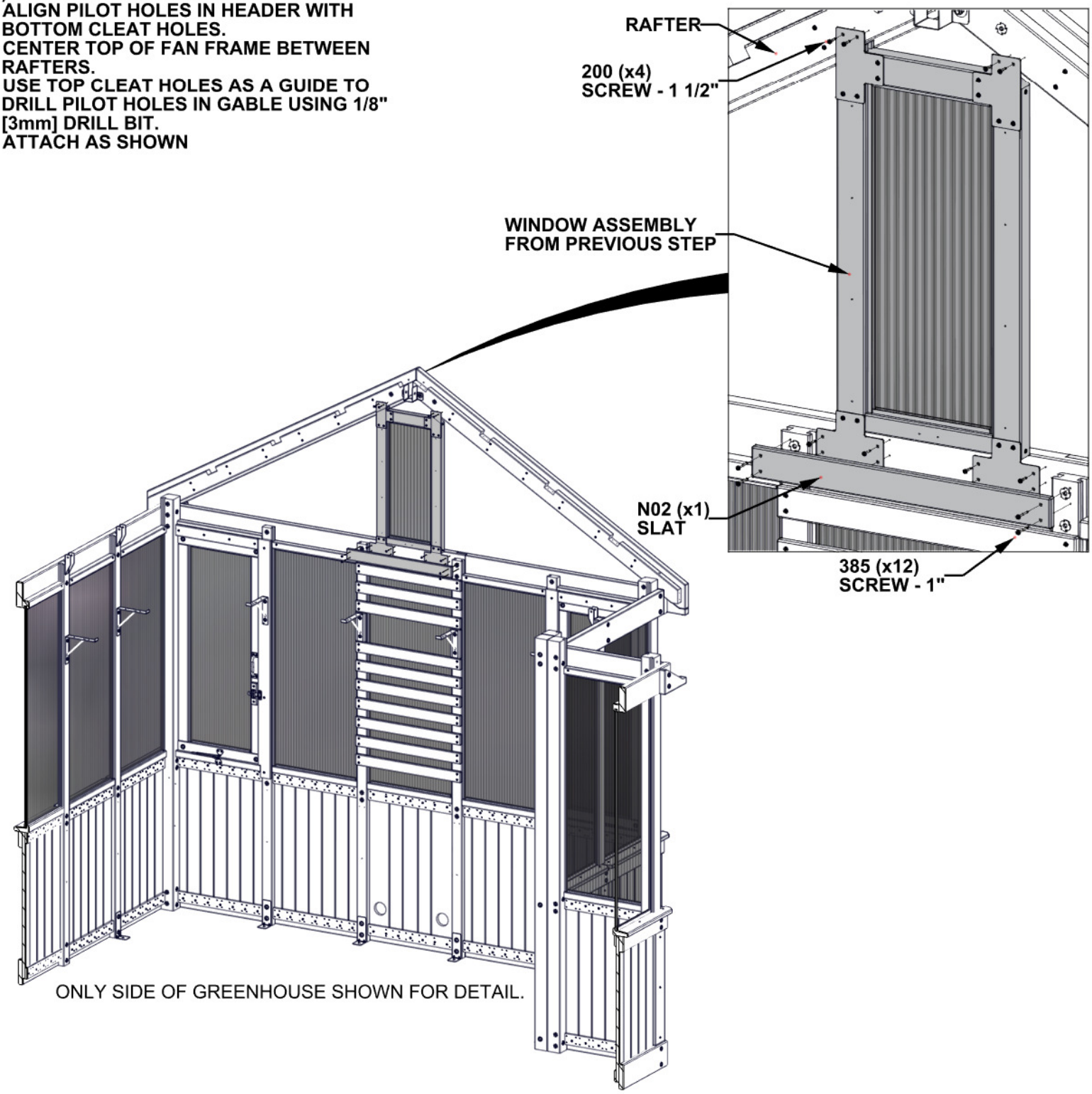

ONLY SIDE OF GREENHOUSE SHOWN FOR DETAIL.

STEP 102 - GABLE ASSEMBLY

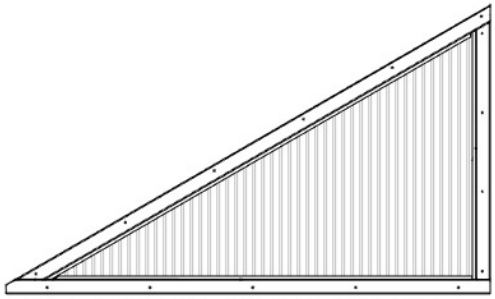

WA03 (x1) WINDOW ASSEMBLY - W2A04520
1 7/16"x28 1/16"x47 1/16" (36x713x1196)

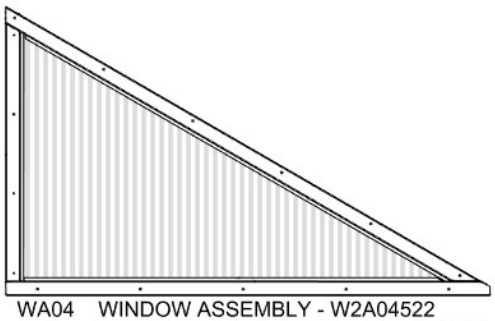

WA04 (x1) WINDOW ASSEMBLY - W2A04522
1 7/16"x28 1/16"x47 1/16" (36x713x1196)

- SLIDE WINDOW ASSEMBLIES INTO OPENINGS UNTIL THEY CONTACT GABLE BOARDS.

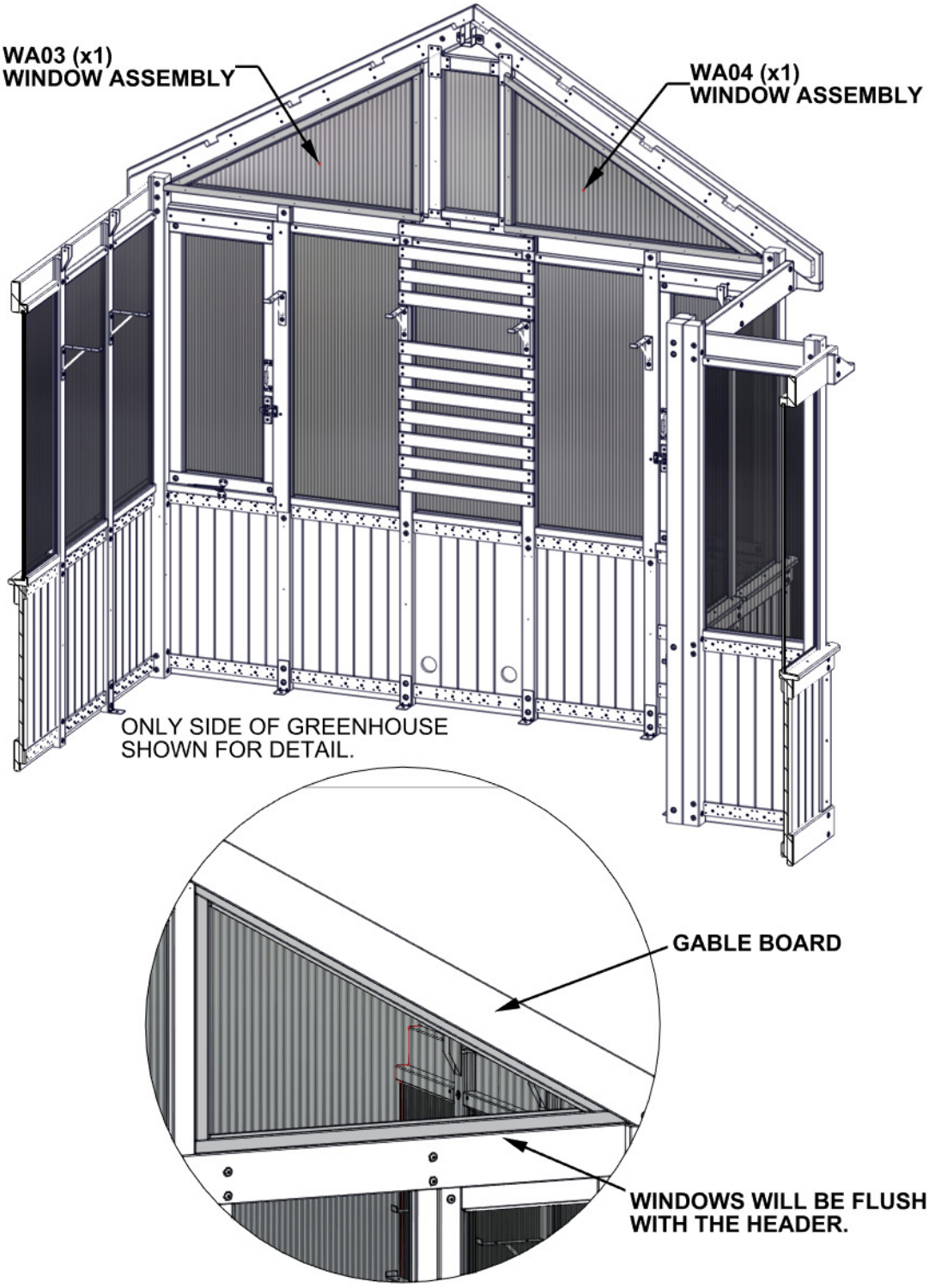

STEP 103 - GABLE ASSEMBLY

QTY	PART NUMBER	DESCRIPTION
64	H100382	SCREW PFH 8x1 3/4 BLK

N03 WINDOW TRIM - W4L20887
(x2) 5/8"x2 3/8"x55 11/16" (16x60x1414)

N04 WINDOW TRIM - W4L20892
(x2) 5/8"x2 3/8"x54 3/4" (16x60x1390)

M05 WINDOW TRIM - W4L20910
(x2) 5/8"x3 3/8"x25 3/8" (16x86x644)

- **TWO ADULTS REQUIRED FOR THIS STEP: ONE TO HOLD WINDOW IN PLACE, ONE TO ATTACH TRIM.**
- **INSTALL M05 BOARDS FIRST BY ALIGNING THROUGH HOLES IN BOARD WITH PILOT HOLES IN WINDOW ASSEMBLY.**
- **REMAINING BOARDS BUTT UP AGAINST M05 AND ARE FLUSH ON THE OUTSIDE AS SHOWN.**
- **ALIGN HOLES ON N03 AND N04 WITH PILOT HOLES IN WINDOW AND ATTACH.**
- **USE AN 1/8" [3mm] DRILL BIT WITH N03 AND N04 AS GUIDES TO DRILL PILOT HOLES.**
- **ATTACH WITH REMAINING HARDWARE.**

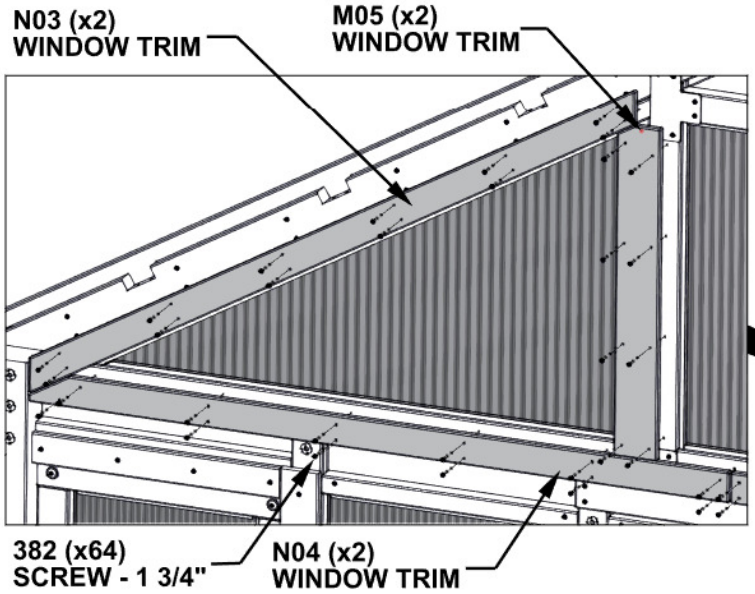

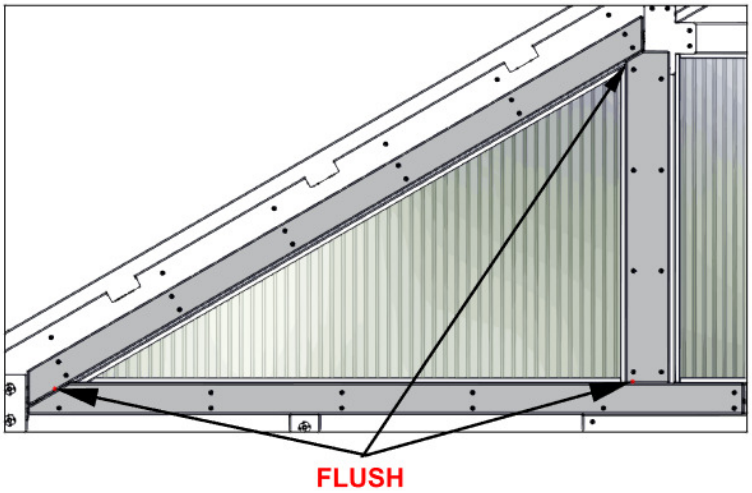

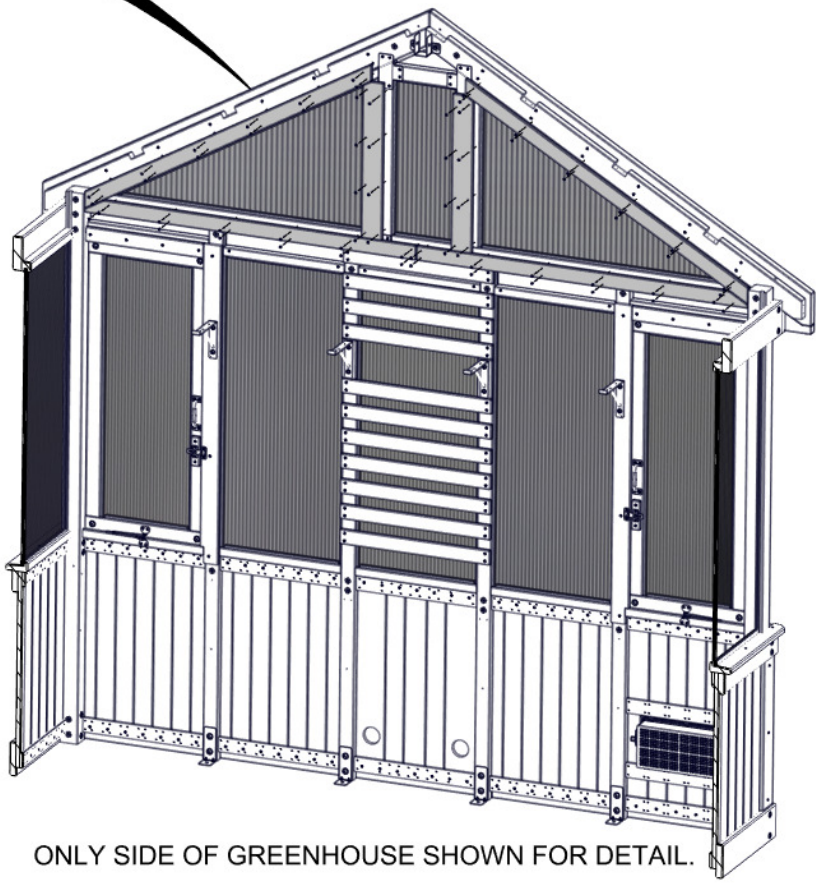

ONLY SIDE OF GREENHOUSE SHOWN FOR DETAIL.

STEP 104 - GABLE ASSEMBLY

QTY	PART NUMBER	DESCRIPTION
4	H100200	SCREW PFH 8x1 1/2 BLK

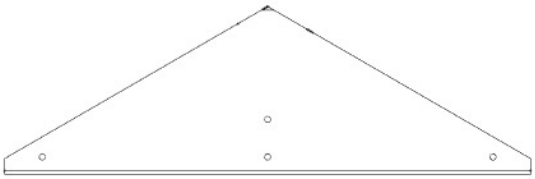

K01 PEAK TRIM - W4L20896
(x1) 5/8"x5 1/4"x16 9/16" (16x134x420)

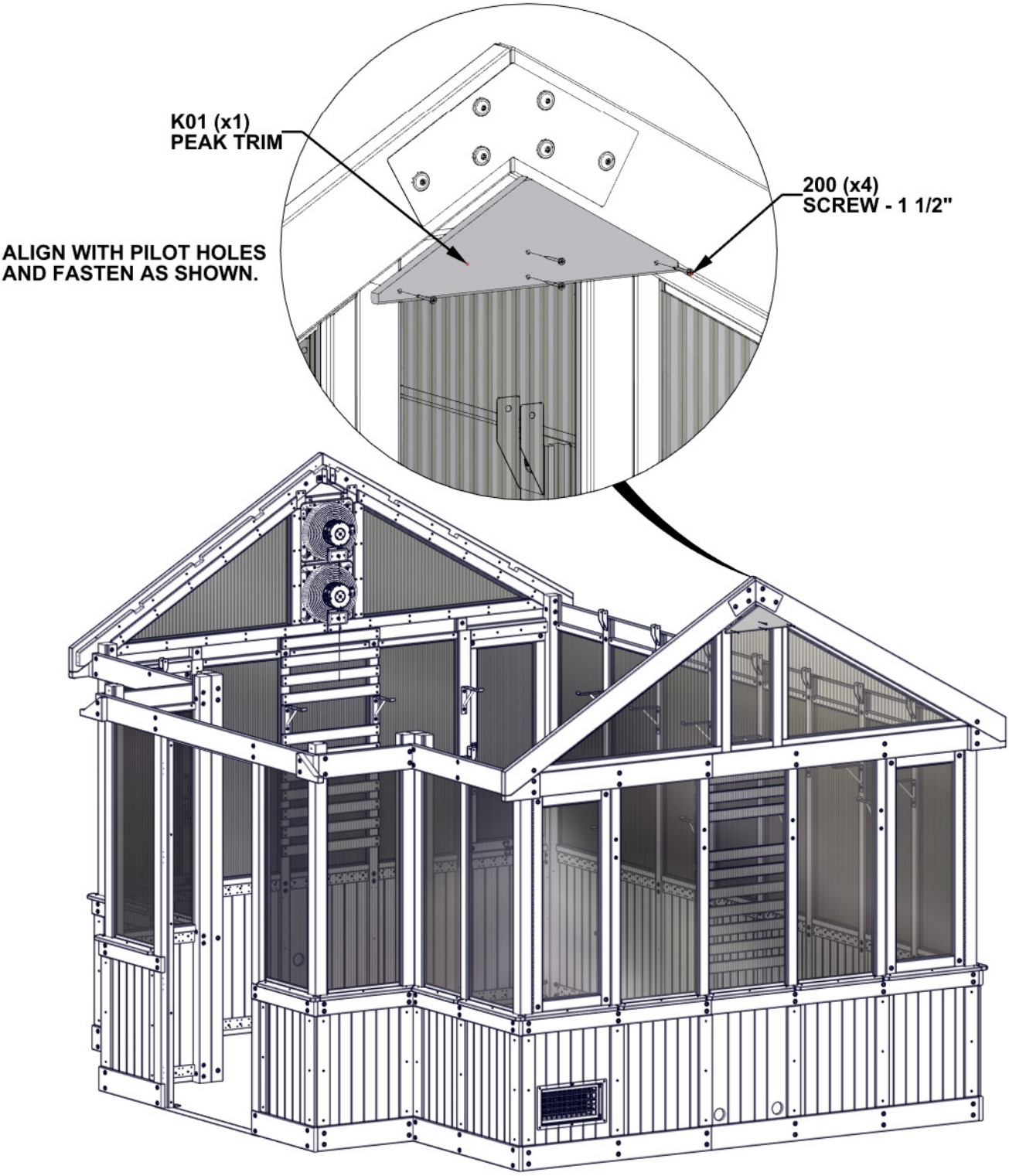

STEP 105 - ROOF ASSEMBLY

QTY	PART NUMBER	DESCRIPTION
14	H100391	SCREW PFH 8x2 BLK

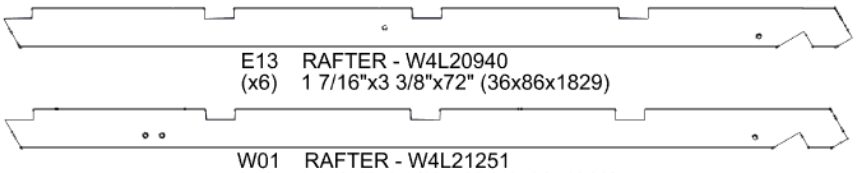

E13 RAFTER - W4L20940
(x6) 1 7/16"x3 3/8"x72" (36x86x1829)

W01 RAFTER - W4L21251
(x1) 1 15/16"x3 3/8"x72" (50x86x1829)

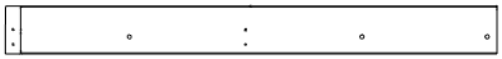

Q01 RIDGE BOARD - W4L20937
(x2) 15/16"x4 7/16"x45 7/16" (24x112x1154)

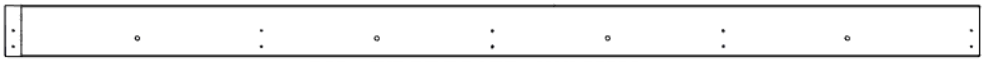

Q03 RIDGE BOARD - W4L20939
(x1) 15/16"x4 7/16"x84 7/16" (24x112x2144)

IMPORTANT!

NOTE ALL NOTCH DIRECTIONS AND BOARD PLACEMENT FOR CORRECT ASSEMBLY.

E13 (x6)
RAFTER

W01 (x1)
RAFTER

Q01 (x1)
RIDGE BOARD

Q03 (x1)
RIDGE BOARD

Q01 (x1)
RIDGE BOARD

ATTACH RIDGE BOARDS
USING PILOT HOLES
IN RAFTERS

ENSURE ALL THROUGH HOLES
ARE CLOSER TO THE BOTTOM
OF Q01 AND Q03 FOR CORRECT
ORIENTATION.

391 (x14)
SCREW - 2"

STEP 106 - ROOF ASSEMBLY

QTY	PART NUMBER	DESCRIPTION
7	H100200	SCREW PFH 8x1 1/2 BLK
49	H100391	SCREW PFH 8x2 BLK

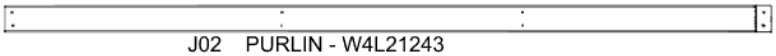

J02 PURLIN - W4L21243
(x3) 24x2 3/8"x68 3/8" (24x60x1737)

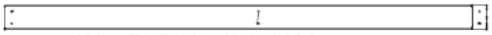

J03 PURLIN - W4L21244
(x3) 24x2 3/8"x46 7/8" (24x60x1191)

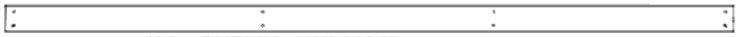

J04 PURLIN - W4L21245
(x3) 15/16"x2 3/8"x62 15/16" (24x60x1598)

J05 PURLIN - W4L21246
(x1) 15/16"x2 3/8"x68 3/8" (24x60x1737)

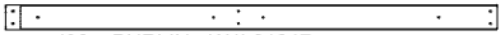

J06 PURLIN - W4L21247
(x1) 15/16"x2 3/8"x46 7/8" (24x60x1191)

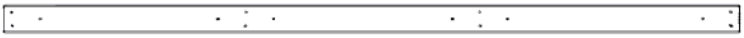

J07 PURLIN - W4L21248
(x1) 15/16"x2 3/8"x62 15/16" (24x60x1598)

- ATTACH PURLINS USING PILOT HOLES IN RAFTERS.

- USE SHORTER SCREWS ON TOP ROW ONLY.

J02 (x1) PURLIN
J03 (x1) PURLIN
J02 (x1) PURLIN
J04 (x3) PURLIN
20" [508mm]
21 1/2" [546mm]
J03 (x1) PURLIN
J06 (x1) PURLIN
J07 (x1) PURLIN
J02 (x1) PURLIN
J05 (x1) PURLIN
J03 (x1) PURLIN
200 (x7) SCREW - 1 1/2"
391 (x49) SCREW - 2"
TOP ROW

STEP 107 - ROOF ASSEMBLY

IMPORTANT!

BEFORE PROCEEDING:
- ENSURE UNIT IS SQUARE.
- THE BELOW DIMENSIONS ARE CRITICAL TO THE FINAL ROOF ASSEMBLY.
- MEASUREMENTS SHOULD BE HELD WITHIN +/- 1/4" [6mm].
- MEASUREMENTS OUTSIDE OF TOLERANCE WILL LEAD TO INABILITY TO ASSEMBLY THE ROOF.

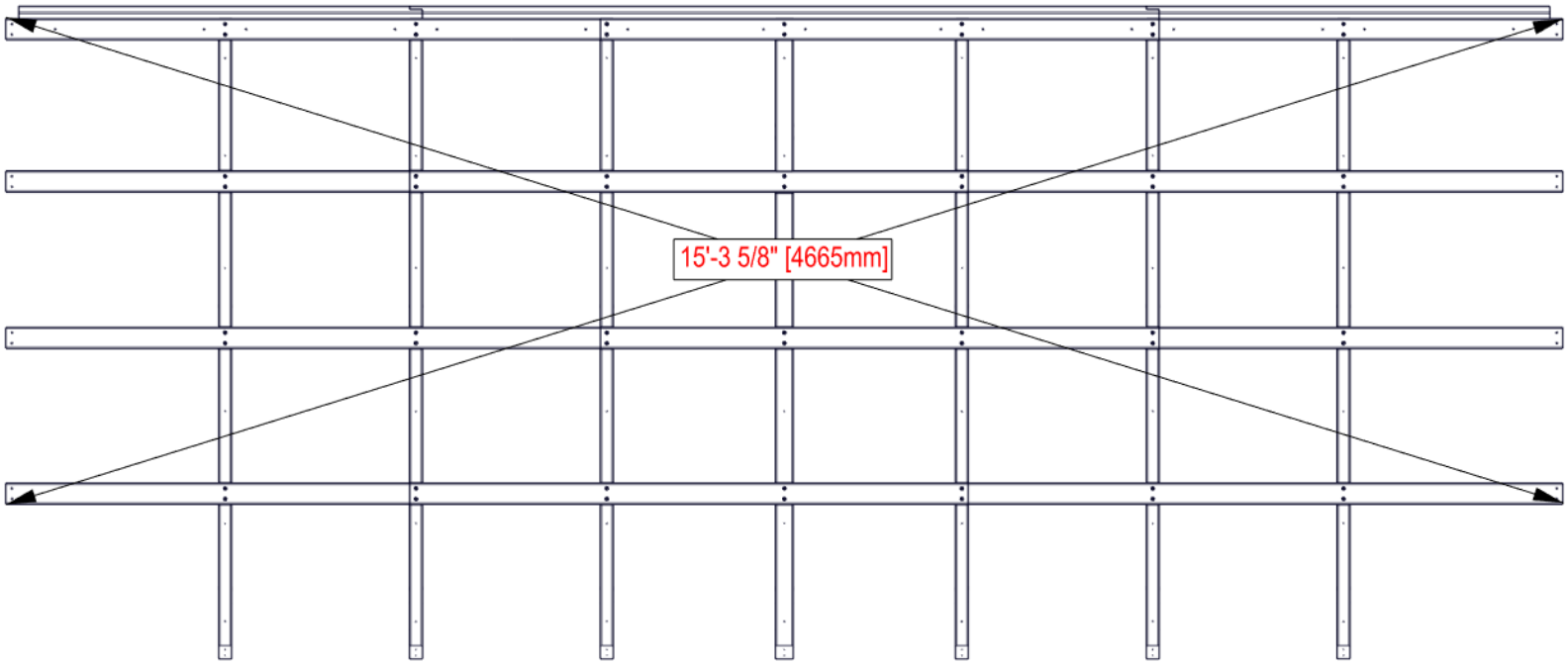

LOOSEN HARDWARE TO ADJUST FOR SQUARING IF NEEDED.

STEP 108 - ROOF ASSEMBLY

QTY	PART NUMBER	DESCRIPTION
42	H101469	SCREW PWH 8x15x1 1/2 BLK

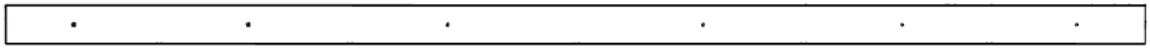

A6P01211 POLY SPLICE
(x7)

- ALIGN HOLES IN POLY SPLICES WITH PILOT HOLES IN RAFTERS.
- DO NOT OVERTIGHTEN.

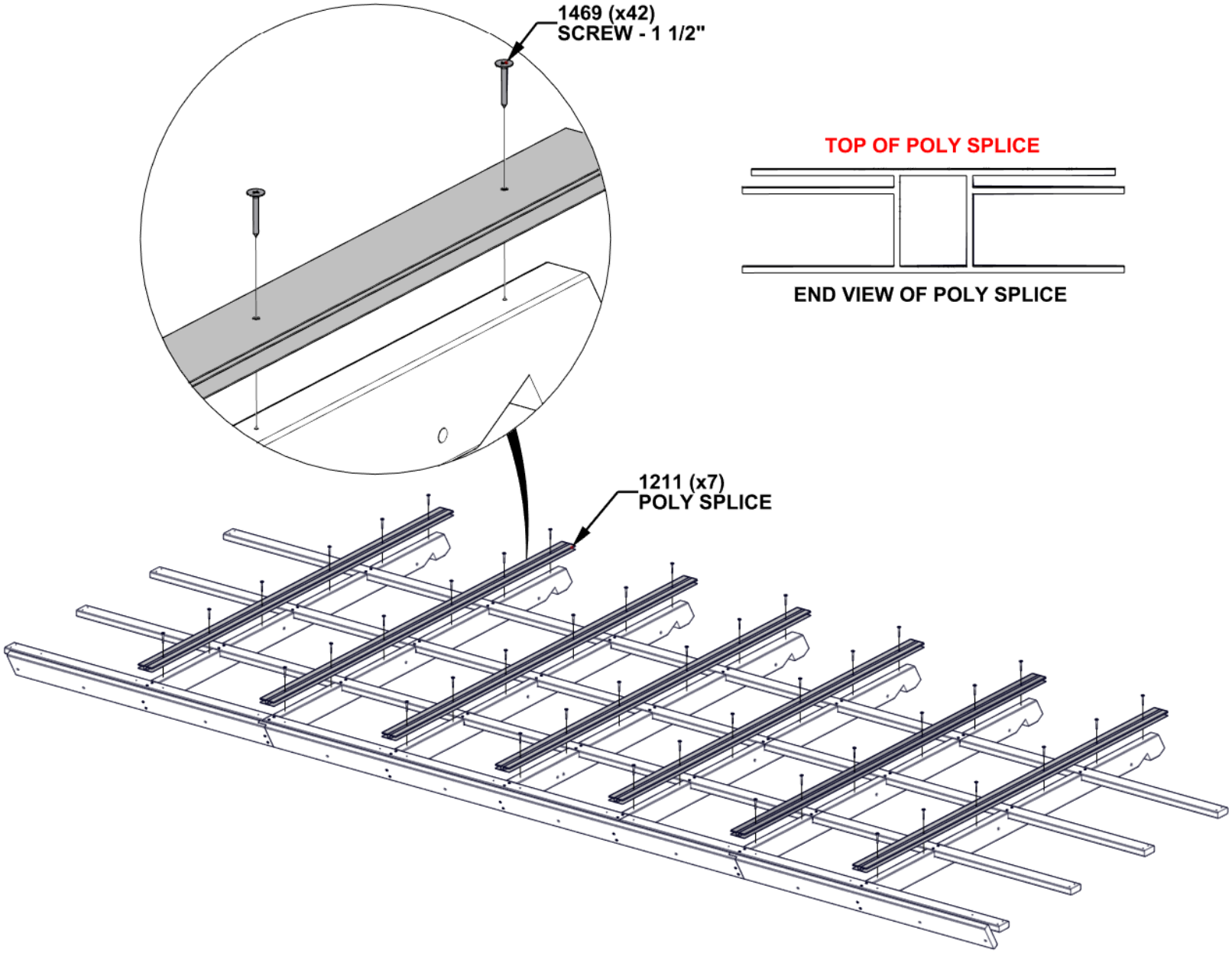

STEP 109 - ROOF ASSEMBLY

- TWO ADULTS REQUIRED FOR THIS STEP.
- PURLINS REST IN NOTCHES IN GABLE AS SHOWN.
- RIDGE RESTS IN BRACKETS AS SHOWN.

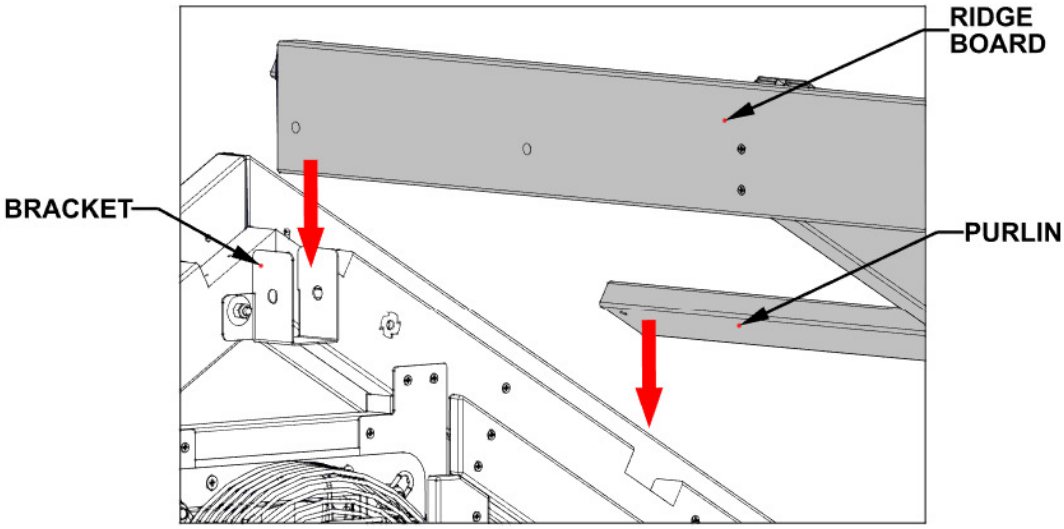

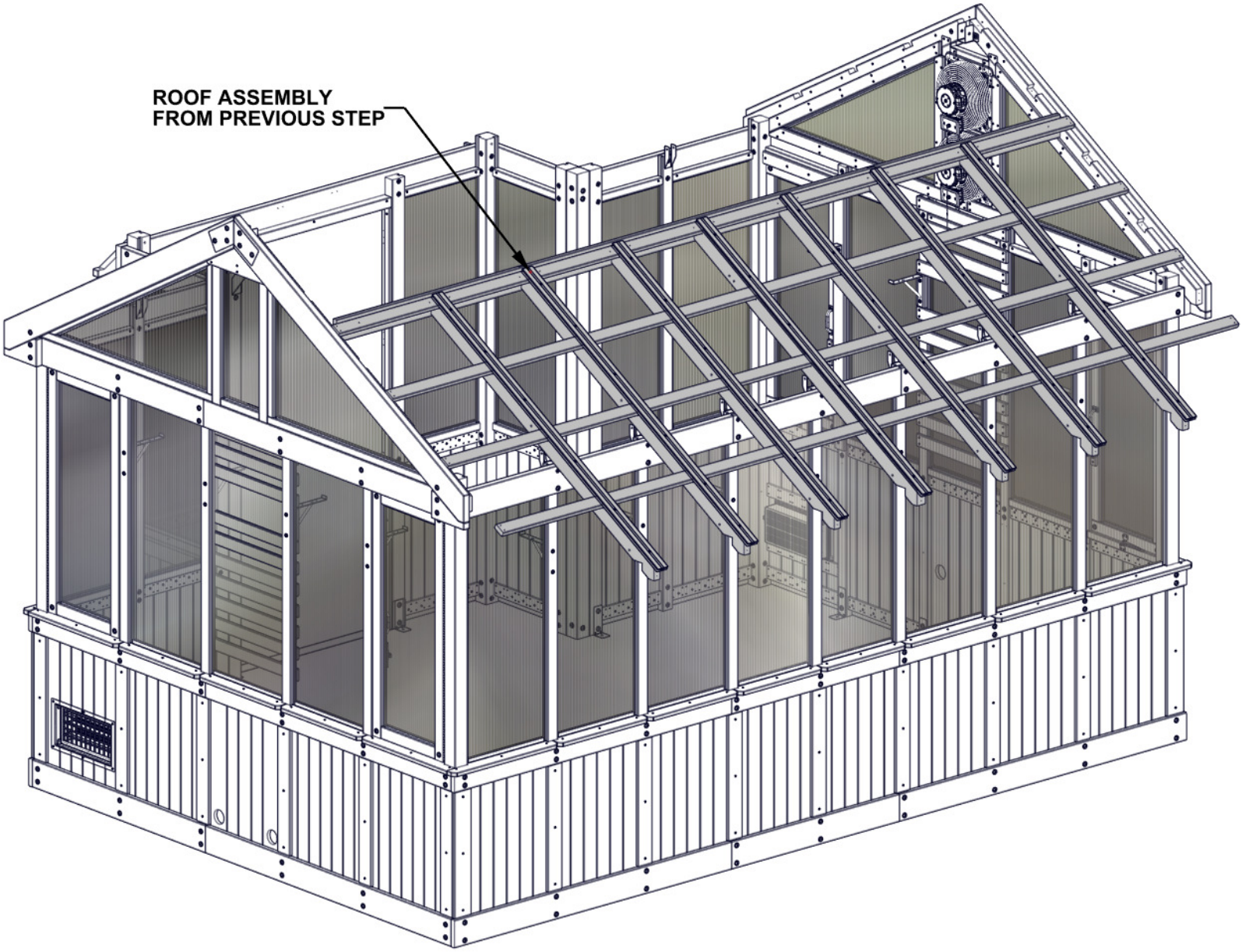

STEP 110 - ROOF ASSEMBLY

QTY	PART NUMBER	DESCRIPTION
6	H100488	BOLT WH 1/4x2 BLK
7	H100630	WASHER FLAT 8x19 BLK
7	H100653	NUT LOCK 1/4 BLK
1	H100999	BOLT WH 1/4x2 1/2 BLK

- ATTACH HARDWARE TO ALL 7 RAFTERS.

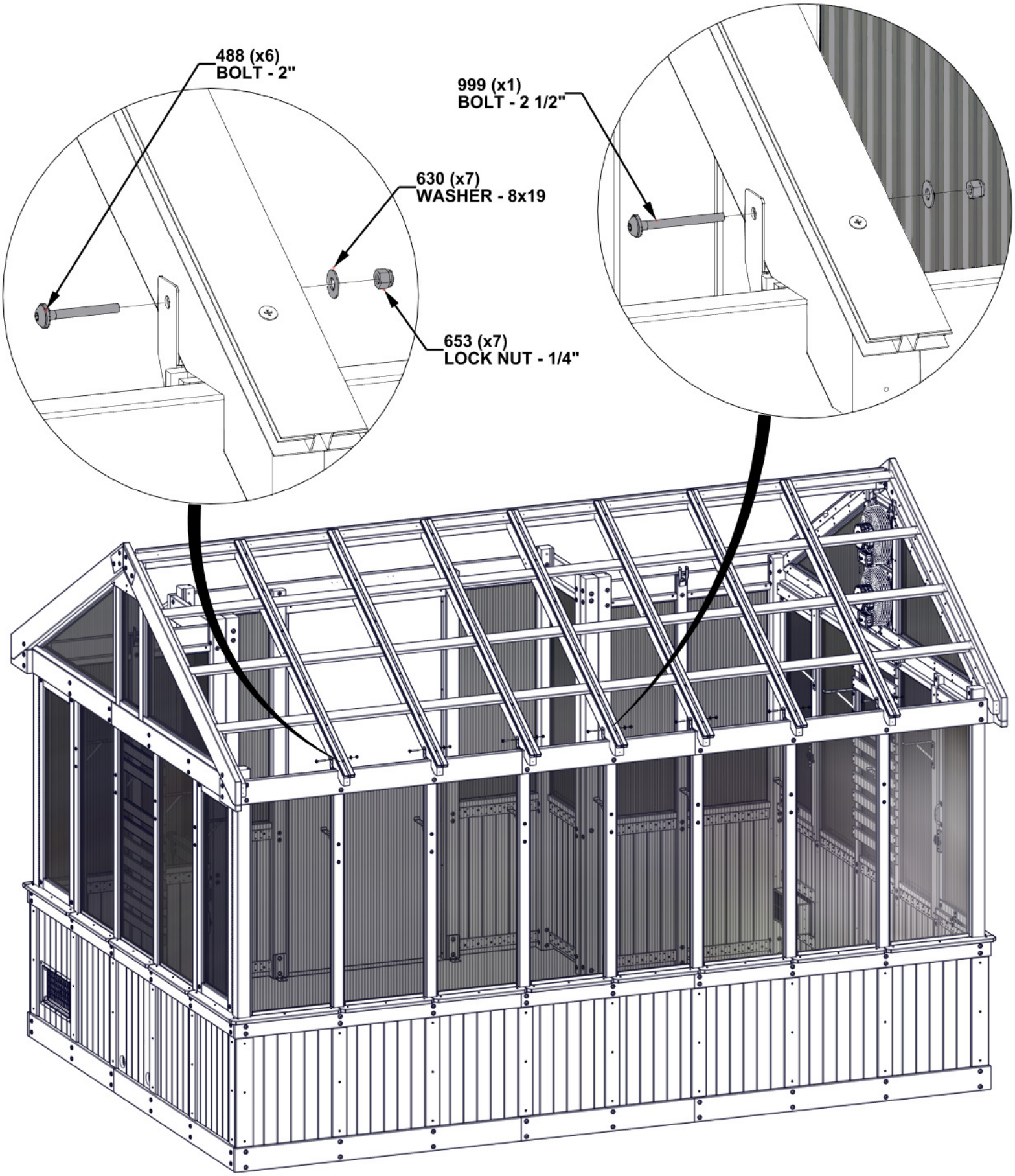

STEP 111 - ROOF ASSEMBLY

QTY	PART NUMBER	DESCRIPTION
16	H100391	SCREW PFH 8x2 BLK

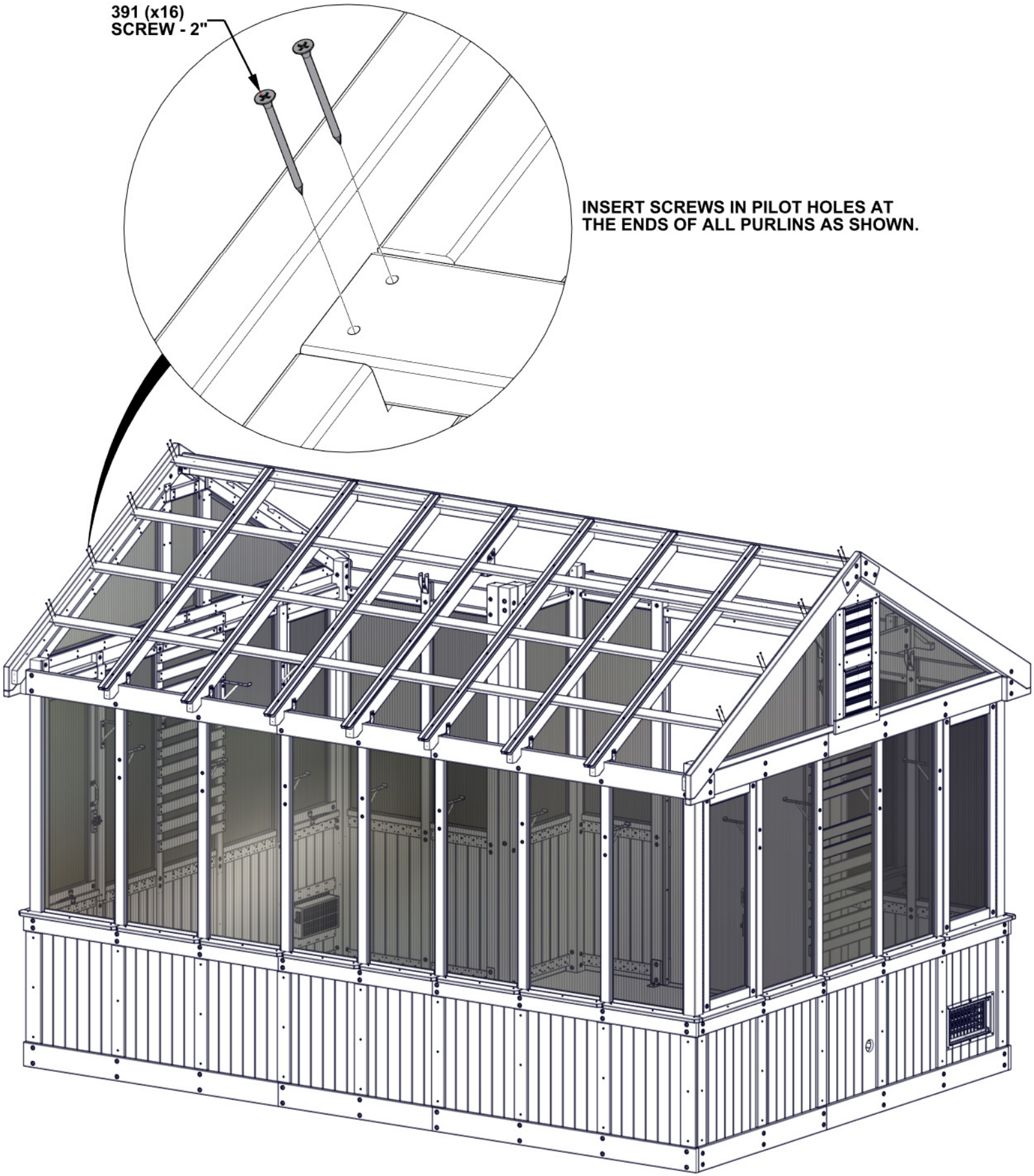

STEP 112 - ROOF ASSEMBLY

QTY	PART NUMBER	DESCRIPTION
2	H100195	BOLT WH 5/16x2 3/4 BLK
2	H100478	WASHER FLAT 8x27 BLK
2	H100479	NUT LOCK 5/16 BLK

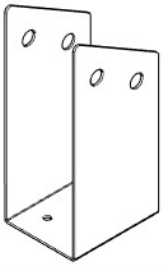

A4M04510 RAFTER BRACKET
(x1)

- HAND TIGHTEN ONLY.

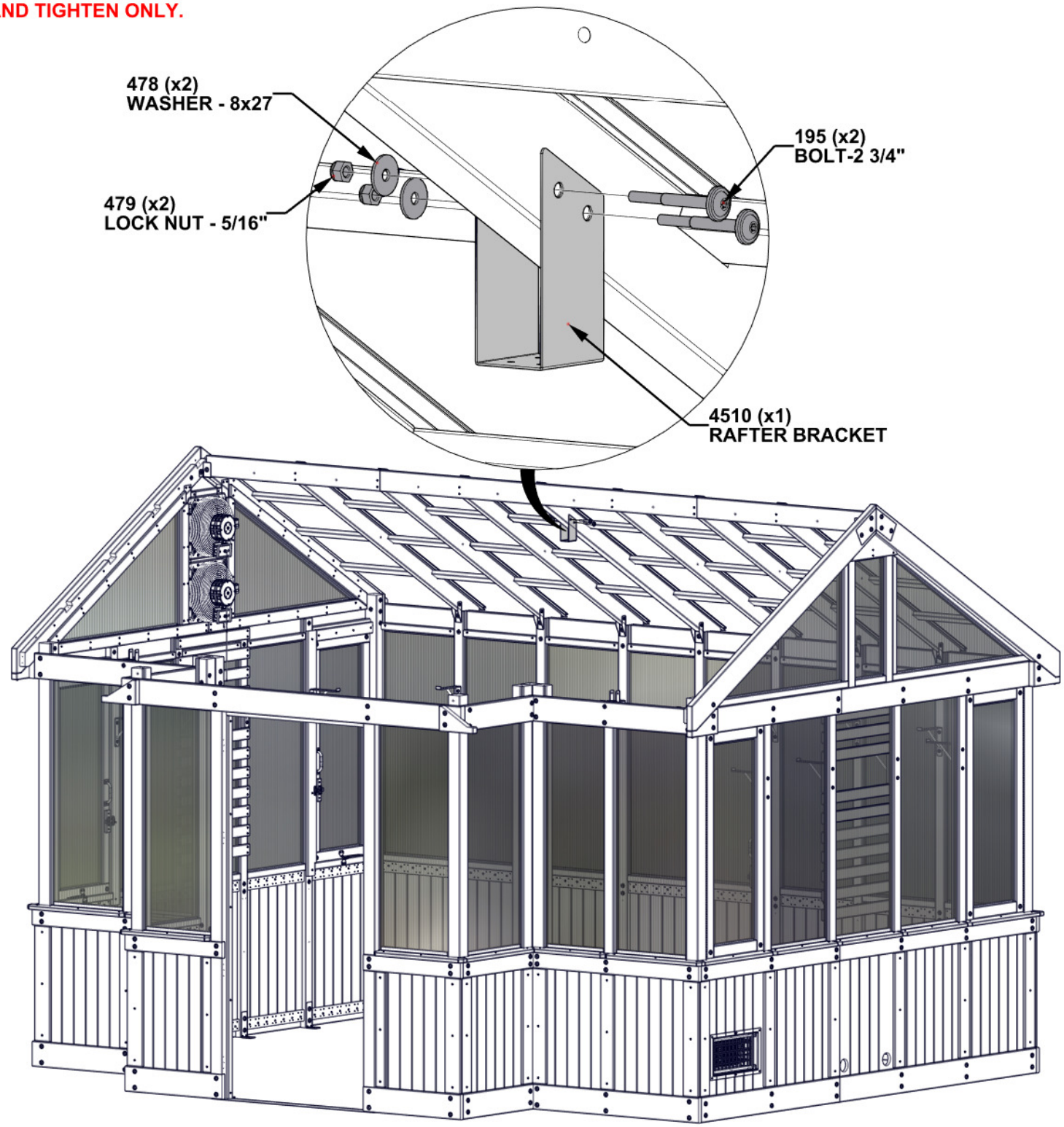

STEP 113 - GABLE ASSEMBLY

QTY	PART NUMBER	DESCRIPTION
20	H100201	SCREW PFH 8x2 1/2 BLK

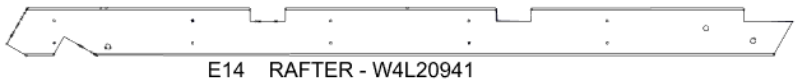

E14 RAFTER - W4L20941
(x2) 1 7/16"x3 3/8"x"56" (36x86x1422)

D10 GABLE BOARD - W4L20936
(x2) 1 7/16"X5 1/4"X58 13/16" (36x134x1494)

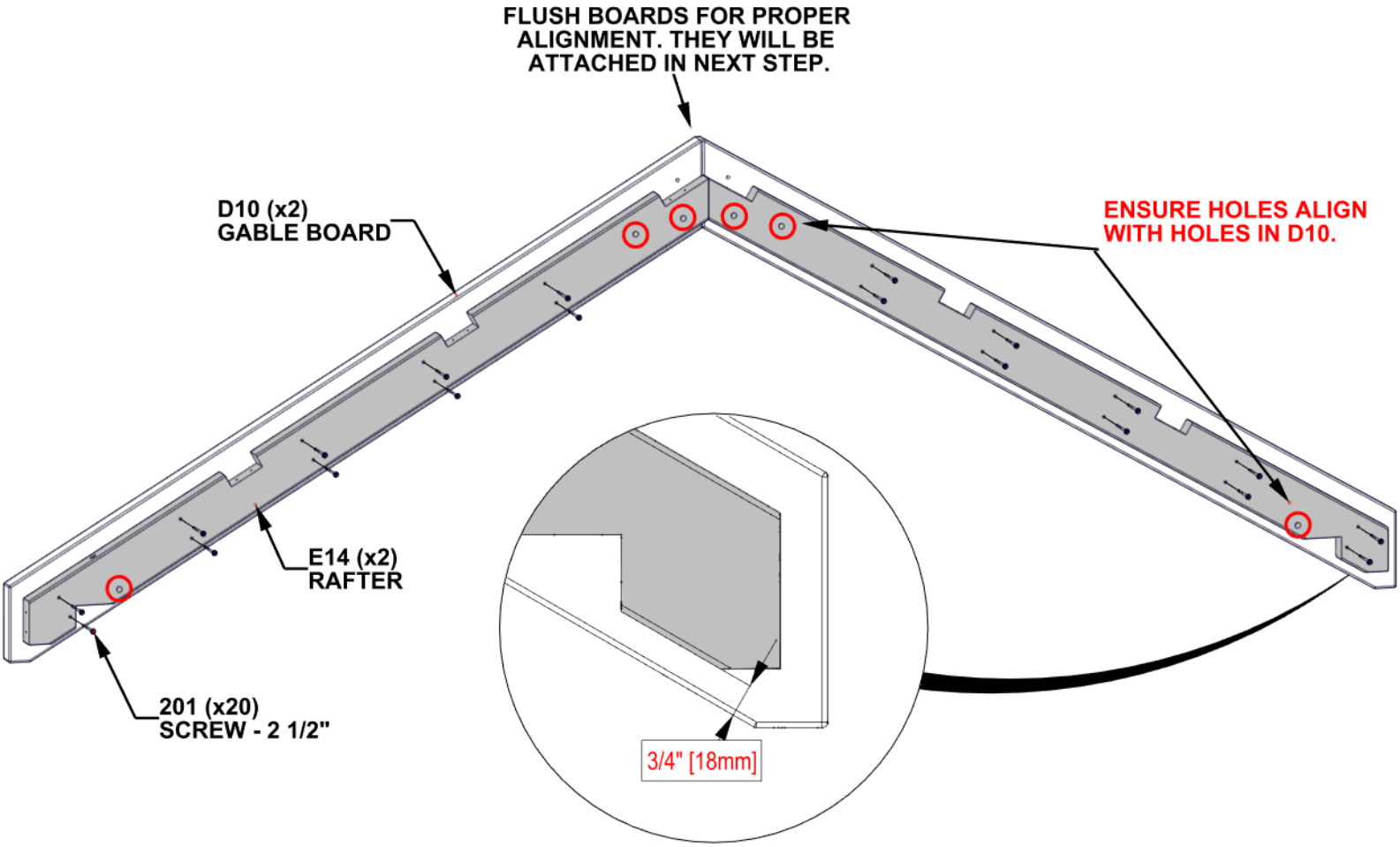

STEP 114 - GABLE ASSEMBLY

QTY	PART NUMBER	DESCRIPTION
2	H100195	BOLT WH 5/16x2 3/4 BLK
2	H100379	TNUT-5/16" BLK
2	H100471	LAG SCREW WH 5/16x1 1/2 BLK
2	H100478	WASHER FLAT 8x27 BLK
2	H100479	NUT LOCK 5/16 BLK
2	H100503	BOLT WH 5/16x3 1/2 BLK

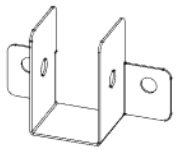

A4M02085 RIDGE CLIP
(x1)

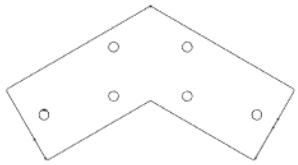

A4M02086 GABLE BRACKET
(x1)

- INSERT T-NUTS FIRST.

- ATTACH GABLES WITH GABLE BRACKET AS SHOWN.
- NOTE CORRECT ORIENTATION OF RIDGE CLIP.

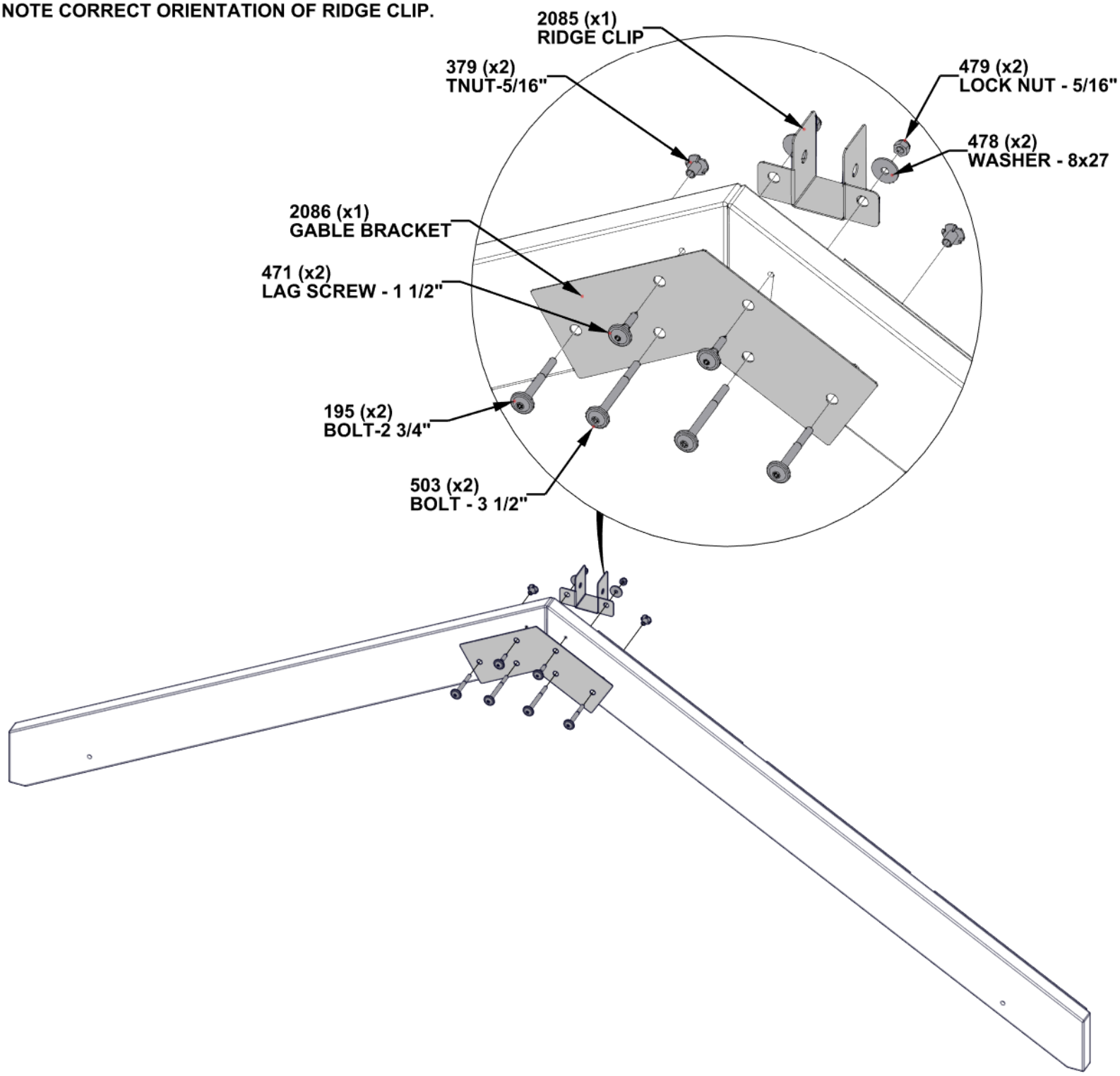

STEP 115 - ROOF ASSEMBLY

QTY	PART NUMBER	DESCRIPTION
5	H100379	T-NUT 5/16 BLK
4	H100391	SCREW PFH 8x2 BLK

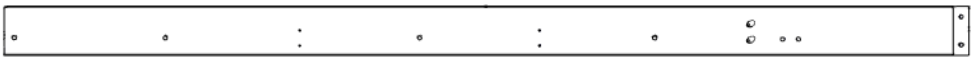

Q06 RIDGE BOARD - W4L20946
(x1) 15/16"x4 7/16"x86 5/8" (24x112x2200)

E23 RAFTER - W4L21272
(x1) 1 7/16"x3 3/8"x21 15/16" (36x86x557)

E25 RAFTER - W4L21274
(x1) 1 7/16"x3 3/8"x46 5/8" (36x86x1185)

IMPORTANT!

NOTE ALL NOTCH DIRECTIONS AND BOARD PLACEMENT FOR CORRECT ASSEMBLY.

- INSERT T-NUTS FIRST.

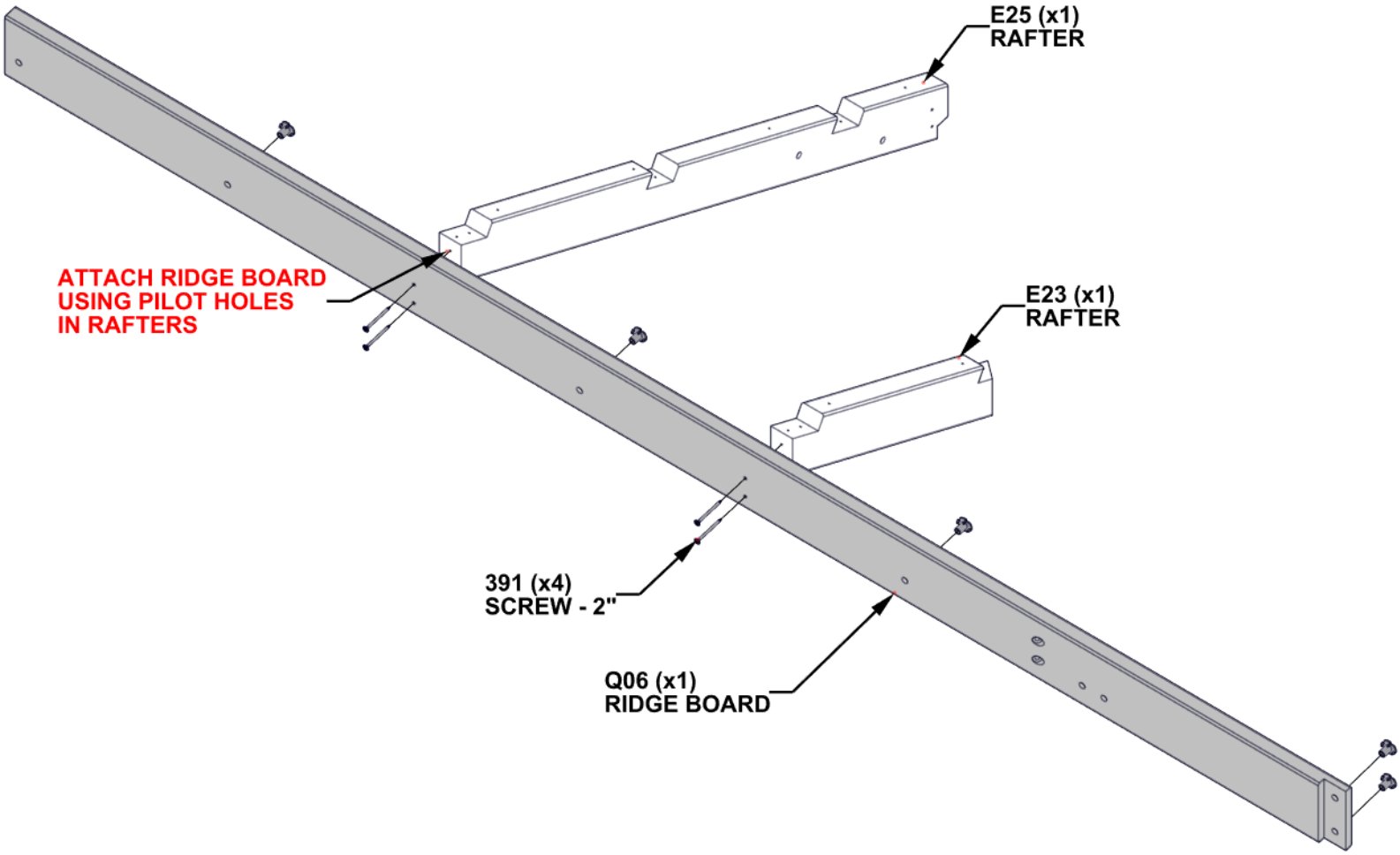

STEP 116 - ROOF ASSEMBLY

QTY	PART NUMBER	DESCRIPTION
2	H101008	SCREW CONFIRMAT 7x3 BLK
2	H101009	SCREW CONFIRMAT 7x3 1/2 BLK
2	H101030	SCREW CONFIRMAT 7x2 BLK

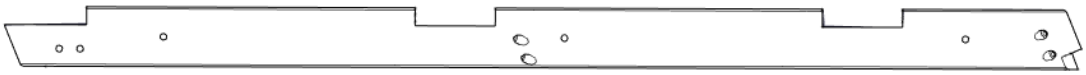

E24 RAFTER - W4L21273
(x1) 1 7/16"x3 3/8"x61 5/16" (36x86x1558)

- ALIGN THROUGH HOLES IN E24 WITH PILOT HOLES IN RAFTERS AND ATTACH AS SHOWN.

1008 (x2)
CONFIRMAT SCREW - 3"

E24 (x1)
RAFTER

1009 (x2)
CONFIRMAT SCREW - 3 1/2"

1030 (x2)
CONFIRMAT SCREW - 2"

FLUSH

STEP 117 - ROOF ASSEMBLY

QTY	PART NUMBER	DESCRIPTION
2	H100200	SCREW PFH 8x1 1/2 BLK
8	H100391	SCREW PFH 8x2 BLK
6	H100483	SCREW PFH 8x2 1/4 BLK

J16 PURLIN - W4L21267
(x1) 15/16"x2 3/8"x68 3/8" (24x60x1737)

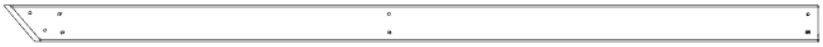

J17 PURLIN - W4L21268
(x1) 15/16"x2 3/8"x53 1/8" (24x60x1350)

J18 PURLIN - W4L21269
(x1) 15/16"x2 3/8"x37 15/16" (24x60x964)

- ATTACH PURLINS USING PILOT HOLES IN RAFTERS.

483 (x6)
SCREW - 2 1/4"

391 (x8)
SCREW - 2"

J18 (x1)
PURLIN

J17 (x1)
PURLIN

J16 (x1)
PURLIN

200 (x1)
SCREW - 1 1/2"

200 (x1)
SCREW - 1 1/2"

STEP 118 - ROOF ASSEMBLY

QTY	PART NUMBER	DESCRIPTION
4	H101469	SCREW PWH 8x15x1 1/2 BLK

A6P01400 POLY SPLICE
(x1)

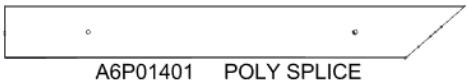

A6P01401 POLY SPLICE
(x1)

- ALIGN HOLES IN POLY SPLICES WITH PILOT HOLES IN RAFTERS.
- DO NOT OVERTIGHTEN.

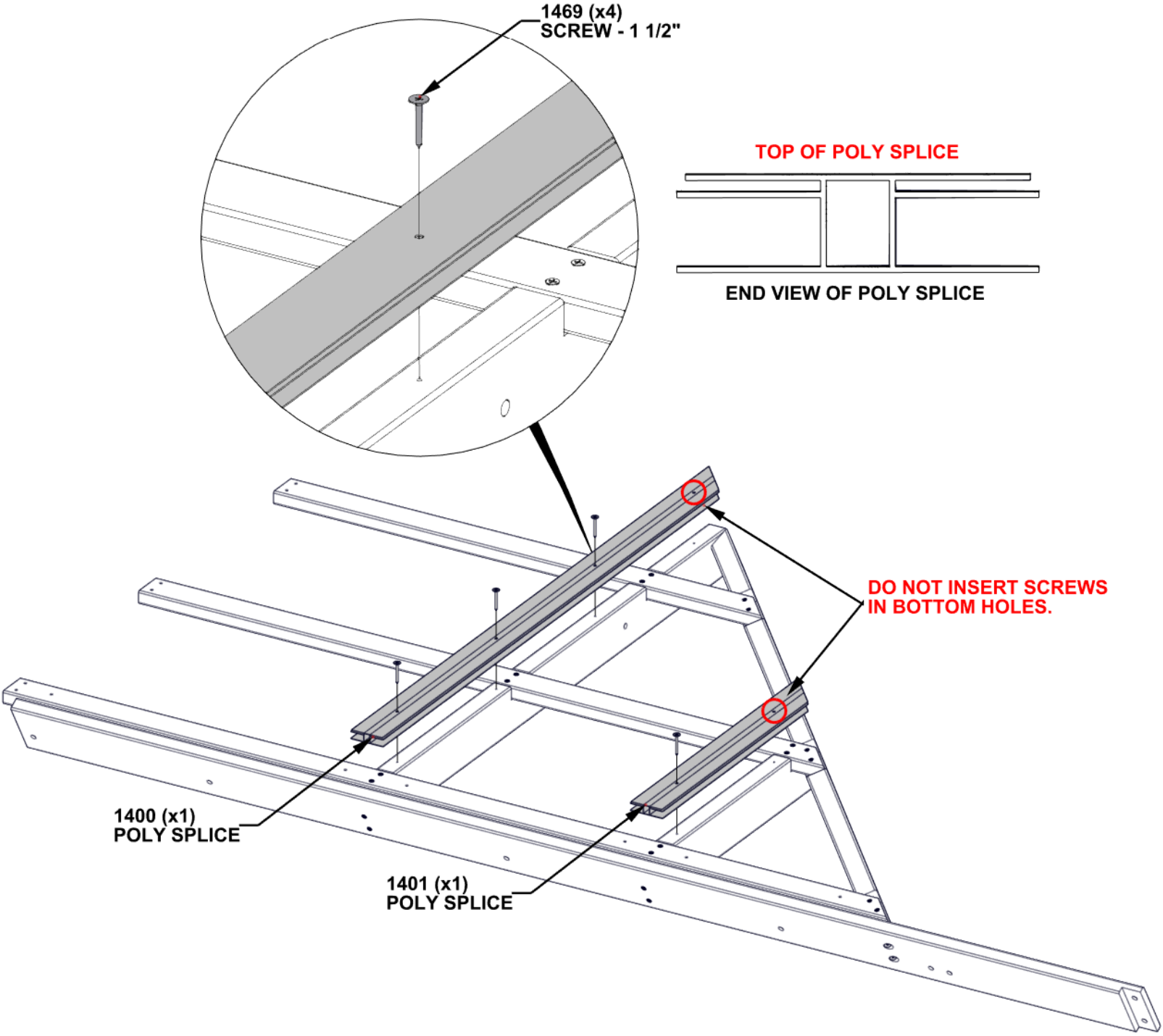

STEP 119 - ROOF ASSEMBLY

QTY	PART NUMBER	DESCRIPTION
4	H100391	SCREW PFH 8x2 BLK

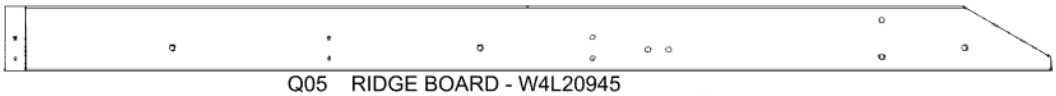

Q05 RIDGE BOARD - W4L20945
(x1) 15/16"x4 7/16"x71 5/8" (24x112x1820)

Q04 RIDGE BOARD - W4L20944
(x1) 15/16"x4 7/16"x27 1/4" (24x112x692)

E16 RAFTER - W4L21253
(x1) 1 7/16"x3 3/8"x46 5/8" (36x86x1185)

E19 RAFTER - W4L21256
(x1) 1 7/16"x3 3/8"x21 15/16" (36x86x557)

IMPORTANT!

NOTE ALL NOTCH DIRECTIONS AND BOARD PLACEMENT FOR CORRECT ASSEMBLY.

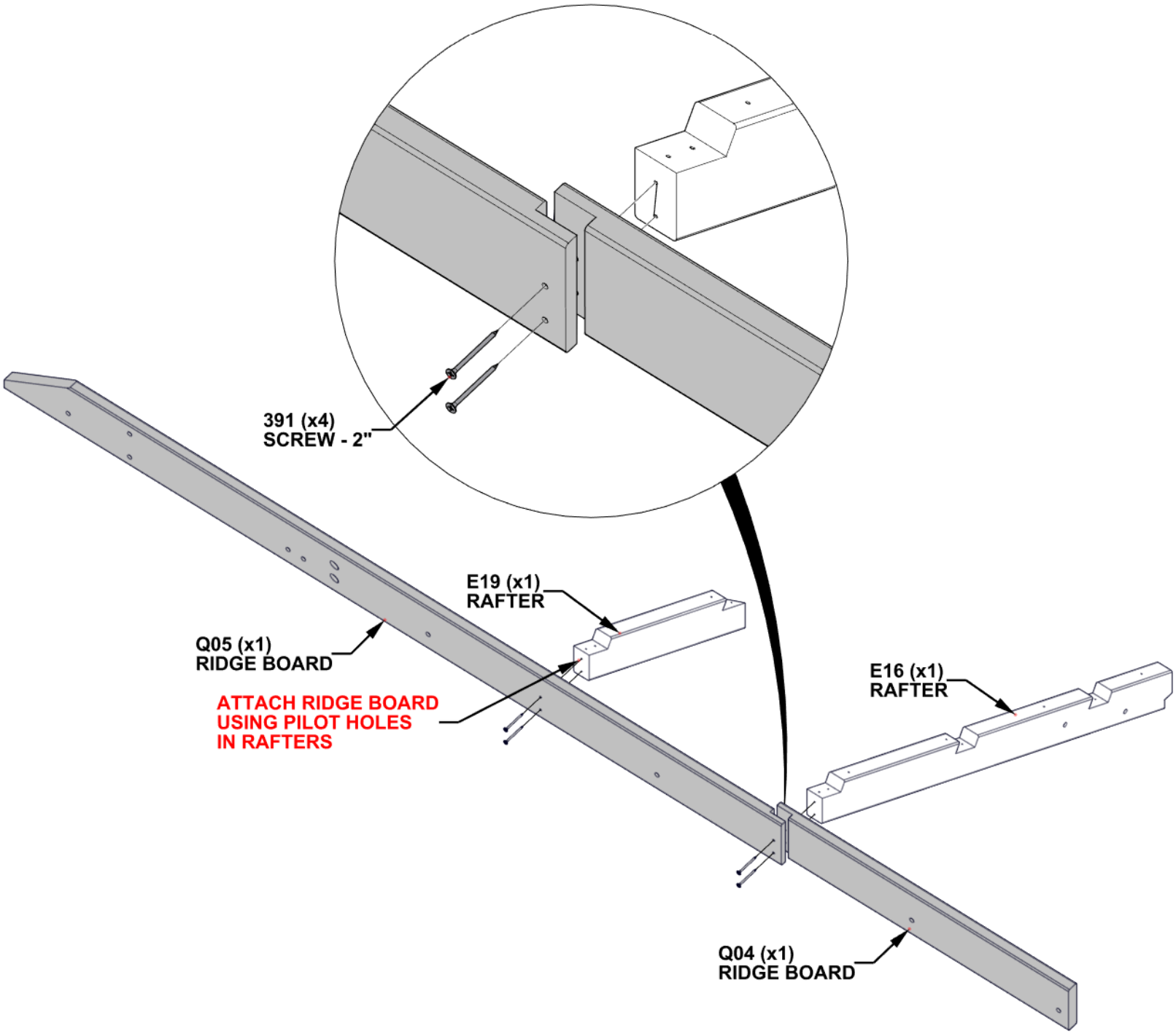

STEP 120 - ROOF ASSEMBLY

QTY	PART NUMBER	DESCRIPTION
2	H101008	SCREW CONFIRMAT 7x3 BLK
2	H101009	SCREW CONFIRMAT 7x3 1/2 BLK
2	H101030	SCREW CONFIRMAT 7x2 BLK

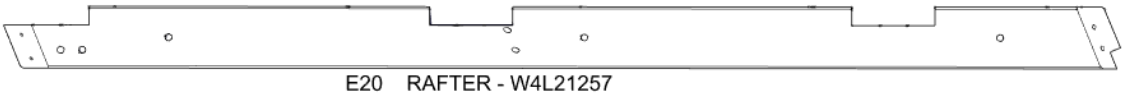

E20 RAFTER - W4L21257
(x1) 1 7/16"x3 3/8"x61 5/16" (36x86x1558)

- ALIGN THROUGH HOLES IN E20 WITH PILOT HOLES IN RAFTERS AND ATTACH AS SHOWN.

1008 (x2)
CONFIRMAT SCREW - 3"

E20 (x1)
RAFTER

1009 (x2)
CONFIRMAT SCREW - 3 1/2"

1030 (x2)
CONFIRMAT SCREW - 2"

FLUSH

STEP 121 - ROOF ASSEMBLY

QTY	PART NUMBER	DESCRIPTION
2	H100200	SCREW PFH 8x1 1/2 BLK
8	H100391	SCREW PFH 8x2 BLK
6	H100483	SCREW PFH 8x2 1/4 BLK

J10 PURLIN - W4L21260
(x1) 15/16"x2 3/8"x68 3/8" (24x60x1737)

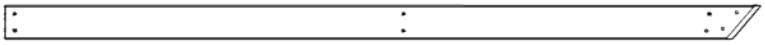

J11 PURLIN - W4L21262
(x1) 15/16"x2 3/8"x53 1/8" (24x60x1350)

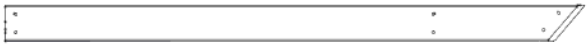

J12 PURLIN - W4L21263
(x1) 15/16"x2 3/8"x37 15/16" (24x60x964)

- ATTACH PURLINS USING PILOT HOLES IN RAFTERS.

483 (x6)
SCREW - 2 1/4"

391 (x8)
SCREW - 2"

200 (x1)
SCREW - 1 1/2"

200 (x1)
SCREW - 1 1/2"

J12 (x1)
PURLIN

J11 (x1)
PURLIN

J10 (x1)
PURLIN

STEP 122 - ROOF ASSEMBLY

QTY	PART NUMBER	DESCRIPTION
4	H101469	SCREW PWH 8x15x1 1/2 BLK

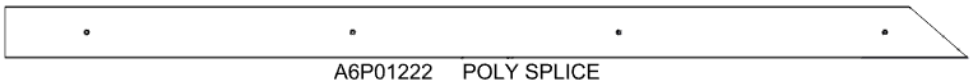

A6P01222 POLY SPLICE
(x1)

A6P01223 POLY SPLICE
(x1)

- ALIGN HOLES IN POLY SPLICES WITH PILOT HOLES IN RAFTERS.
- DO NOT OVERTIGHTEN.

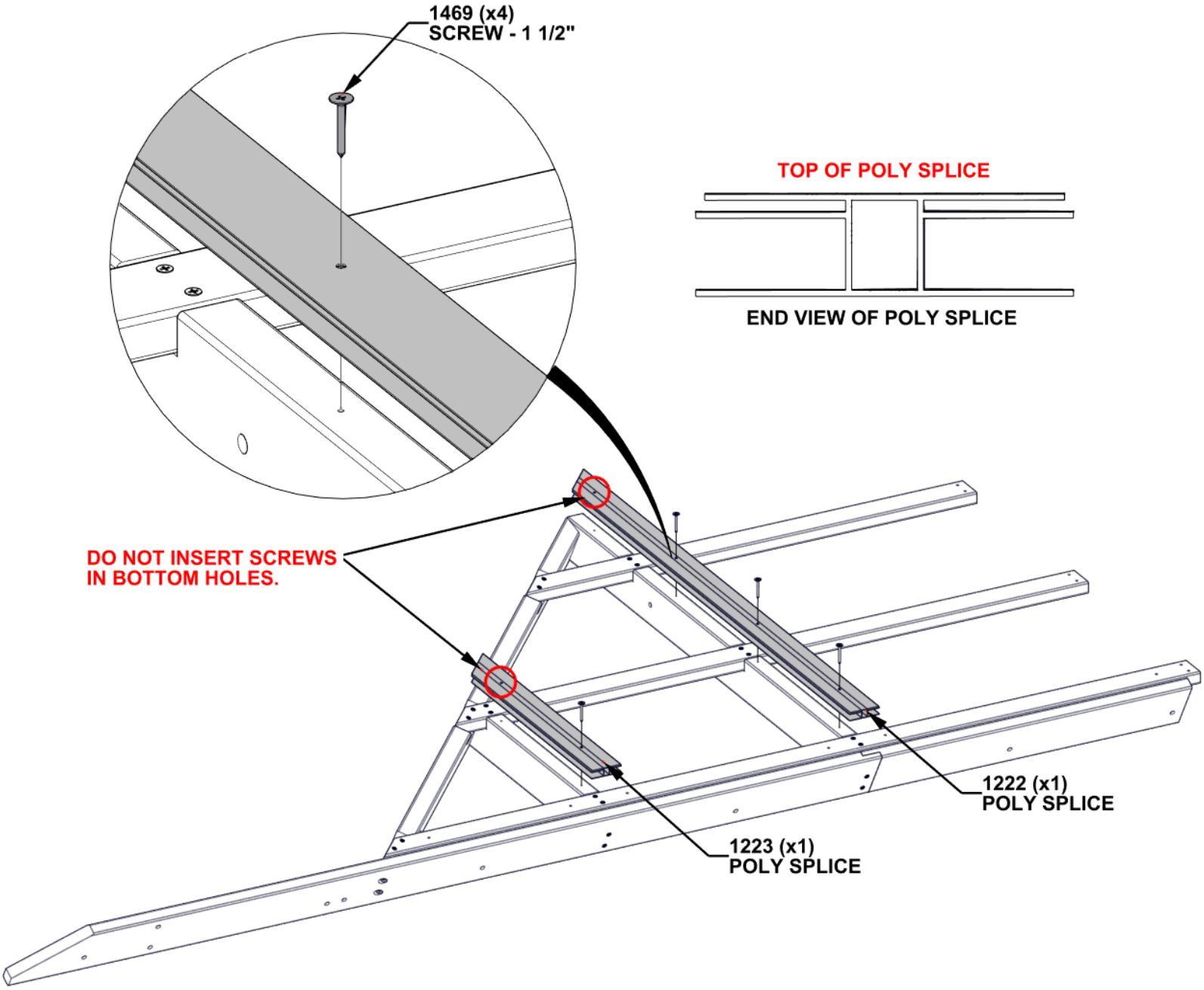

STEP 123 - ROOF ASSEMBLY

QTY	PART NUMBER	DESCRIPTION
1	H100198	WASHER LOCK EXT 8x19
1	H100378	BOLT WH 5/16x1 3/4 BLK
1	H100379	T-NUT 5/16 BLK

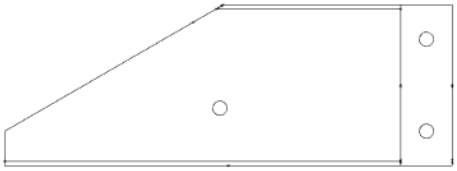

Q07 RIDGE BOARD - W4L21241
(x1) 15/16"x4 7/16"x12 5/16" (24x112x312)

- INSERT T-NUTS FIRST.
- HAND TIGHTEN ONLY.

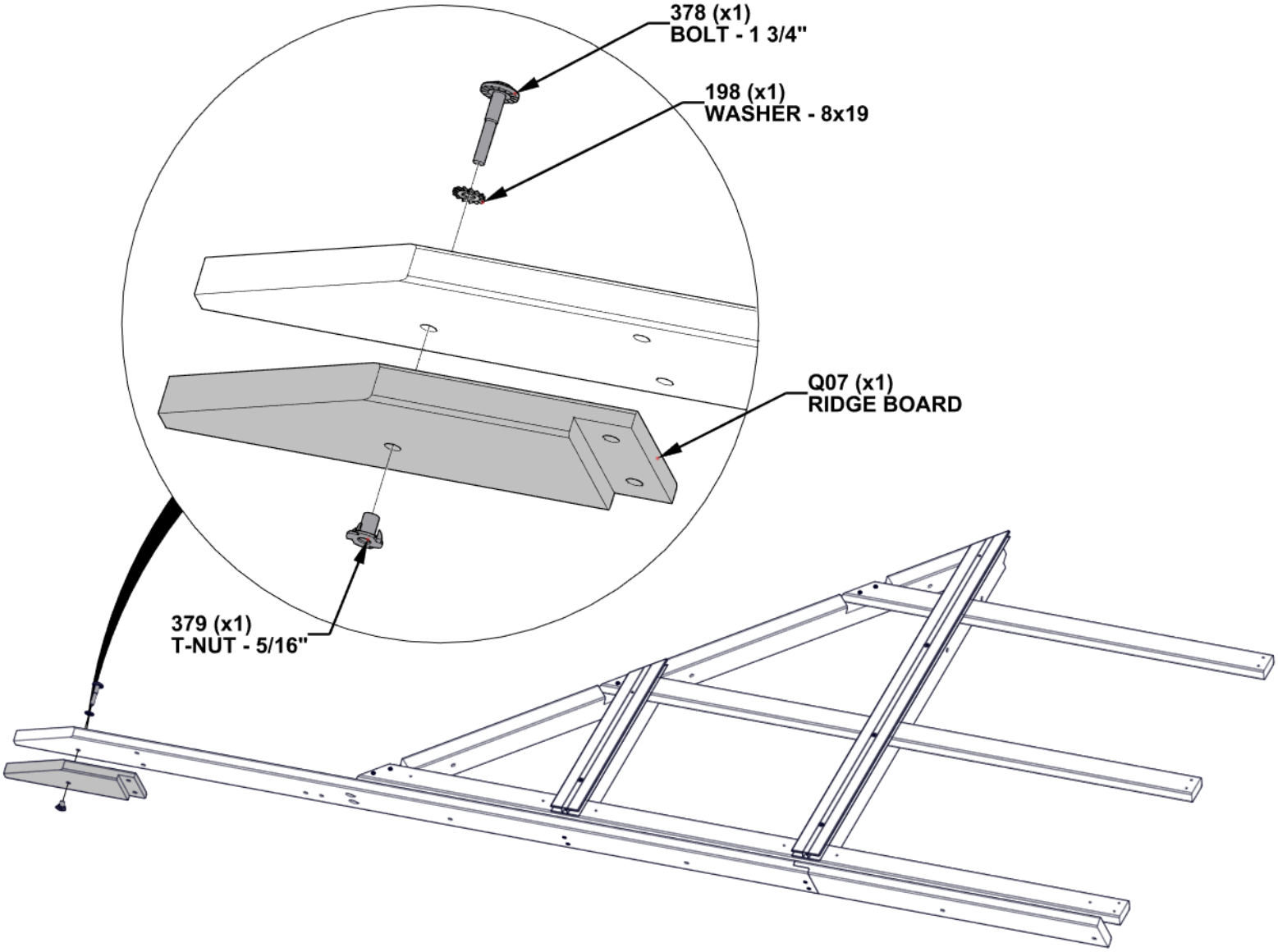

STEP 124 - ROOF ASSEMBLY

QTY	PART NUMBER	DESCRIPTION
5	H100198	WASHER LOCK EXT 8x19
5	H100378	BOLT WH 5/16x1 3/4 BLK

- ATTACH ROOF ASSEMBLIES AS SHOWN.
- HAND TIGHTEN ONLY.

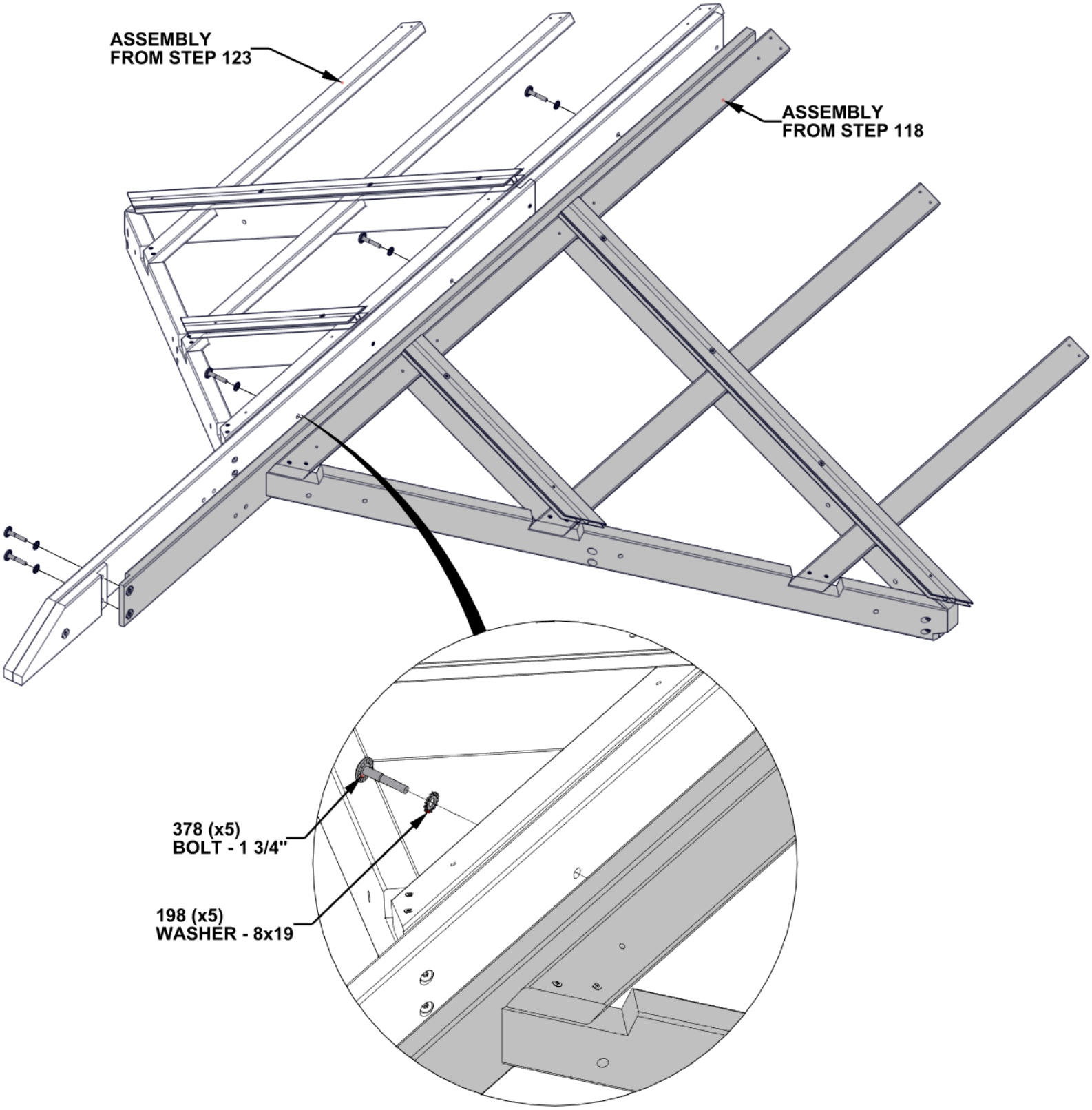

STEP 125 - ROOF ASSEMBLY

QTY	PART NUMBER	DESCRIPTION
2	H100195	BOLT WH 5/16x2 3/4 BLK
2	H100198	WASHER LOCK EXT 8x19
2	H100379	TNUT-5/16" BLK

E27 ACCESSORY TRUSS - W4L21293
(x1) 1 7/16"x3 3/8"x61 1/8" (36x86x1552)

- INSERT T-NUTS FIRST.
- HAND TIGHTEN ONLY.

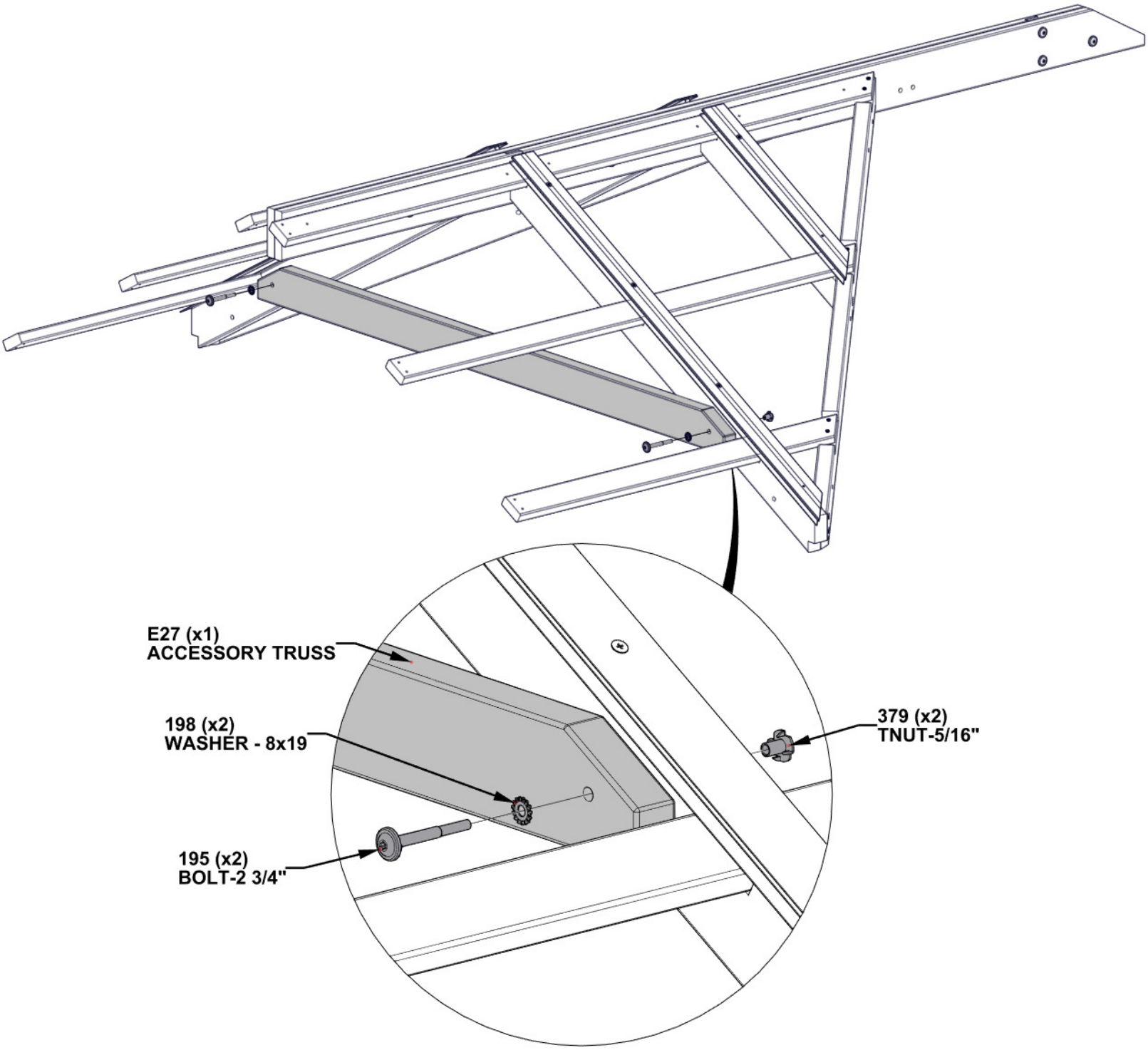

STEP 126 - ROOF ASSEMBLY

QTY	PART NUMBER	DESCRIPTION
2	H100195	BOLT WH 5/16x2 3/4 BLK
2	H100478	WASHER FLAT 8x27 BLK
2	H100479	NUT LOCK 5/16 BLK

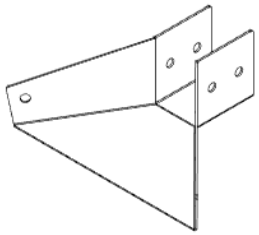

A4M04509 VALLEY BRACKET
(x1)

- HAND TIGHTEN ONLY.

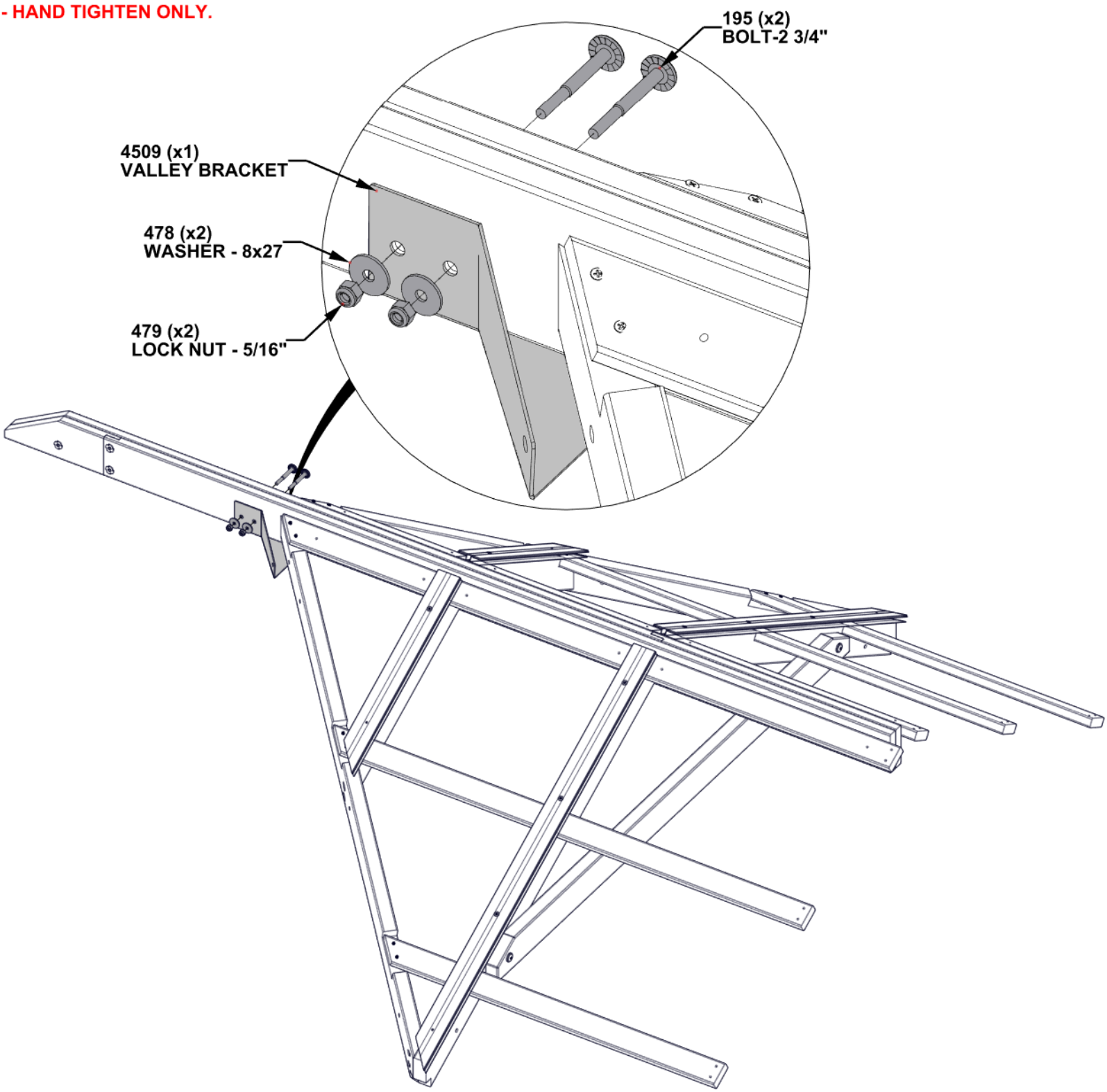

STEP 127 - ROOF ASSEMBLY

QTY	PART NUMBER	DESCRIPTION
1	H100195	BOLT WH 5/16x2 3/4 BLK
1	H100478	WASHER FLAT 8x27 BLK
1	H100479	NUT LOCK 5/16 BLK

- ATTACH GABLE END AS SHOWN.
- HAND TIGHTEN ONLY.

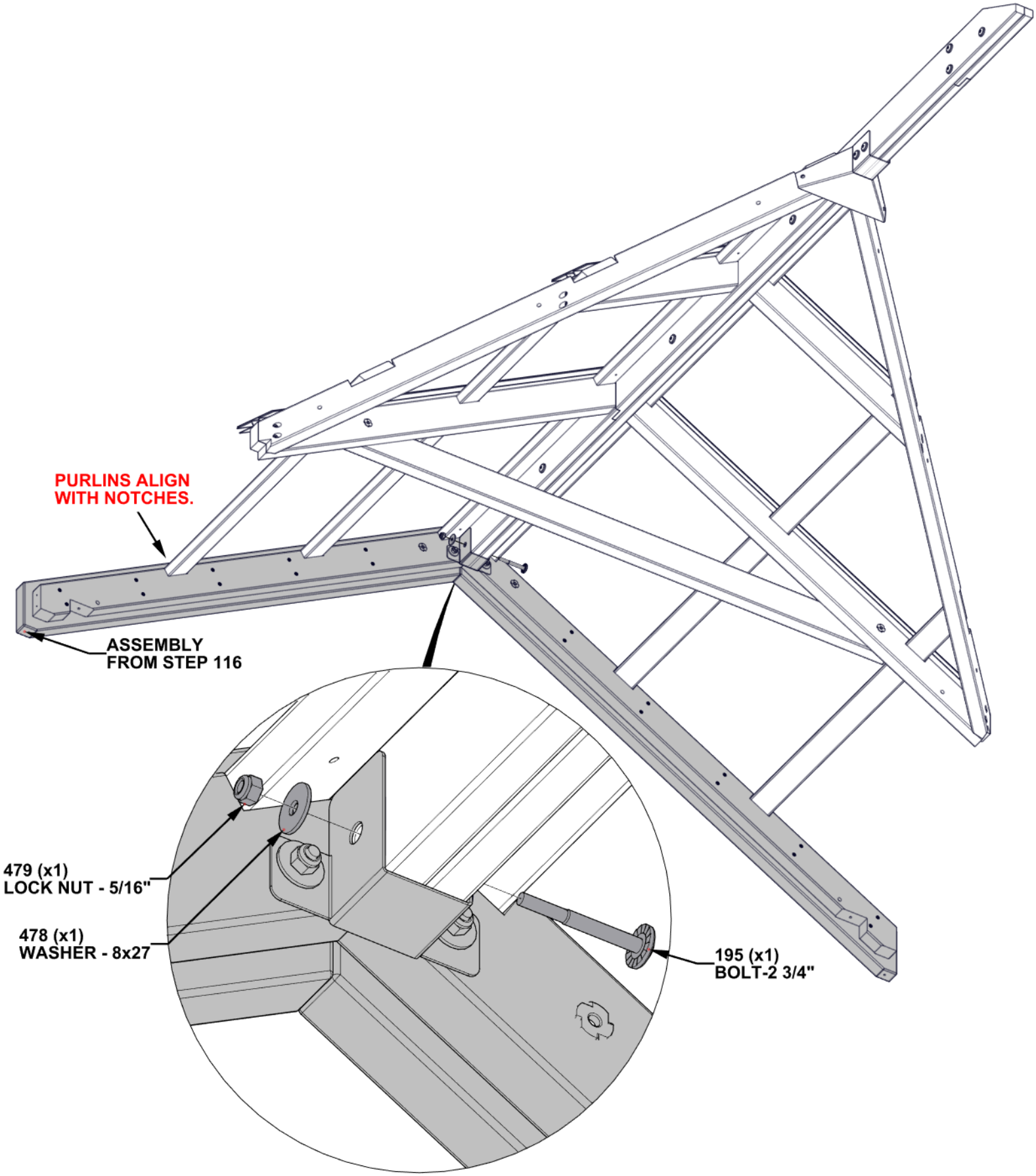

STEP 128 - ROOF ASSEMBLY

QTY	PART NUMBER	DESCRIPTION
12	H100391	SCREW PFH 8x2 BLK

- ALIGN THROUGH HOLES IN PURLINS WITH PILOT HOLES IN RAFTERS AND INSERT SCREWS.

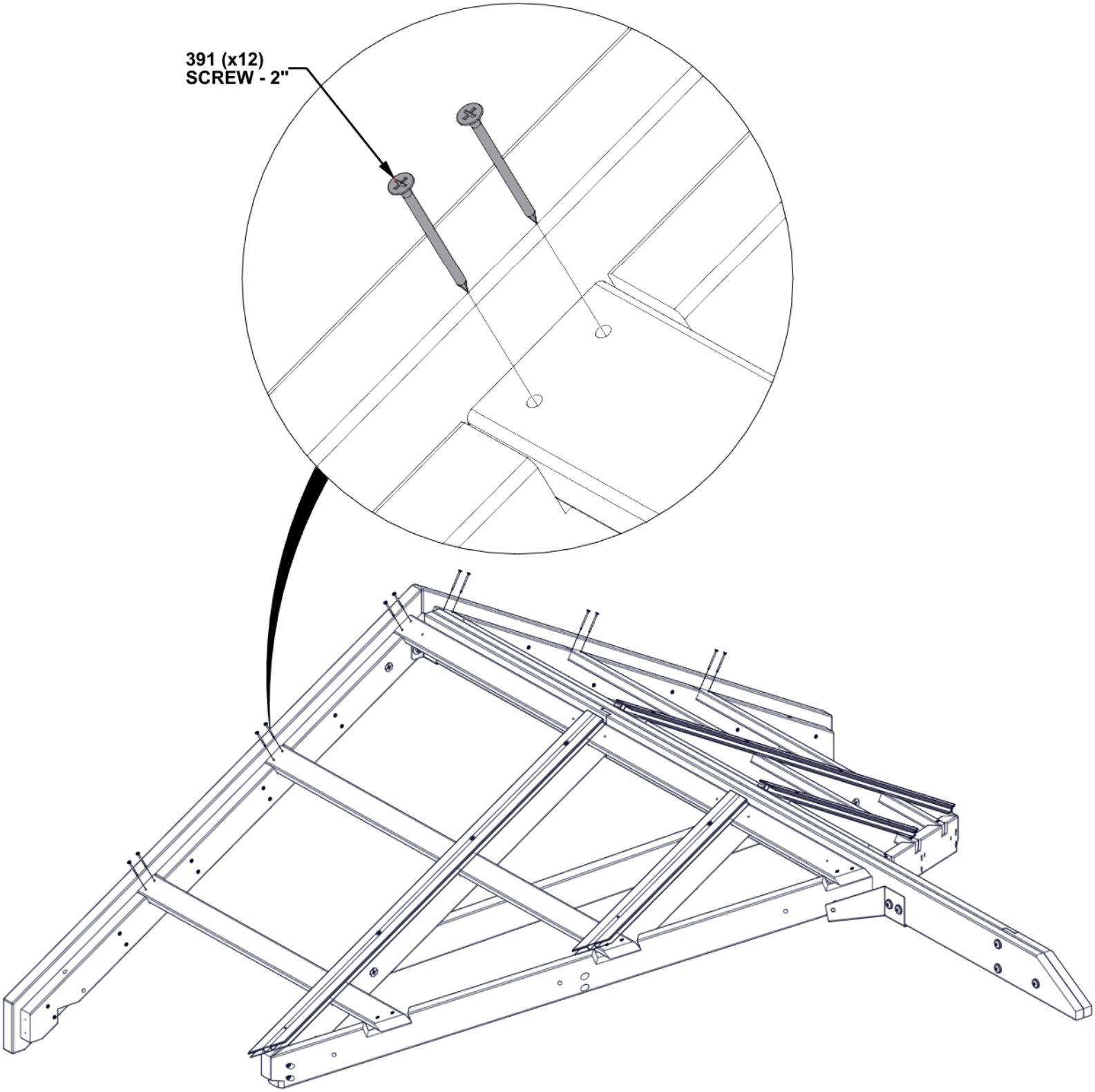

STEP 129 - ROOF ASSEMBLY

QTY	PART NUMBER	DESCRIPTION
2	H100198	WASHER LOCK EXT 8x19
2	H100379	TNUT-5/16" BLK
2	H100974	BOLT WH 5/16x5 3/4 BLK

- TWO ADULTS REQUIRED FOR THIS STEP.

- LIFT UP ROOF ASSEMBLY AND SLIDE INTO PLACE AS SHOWN.

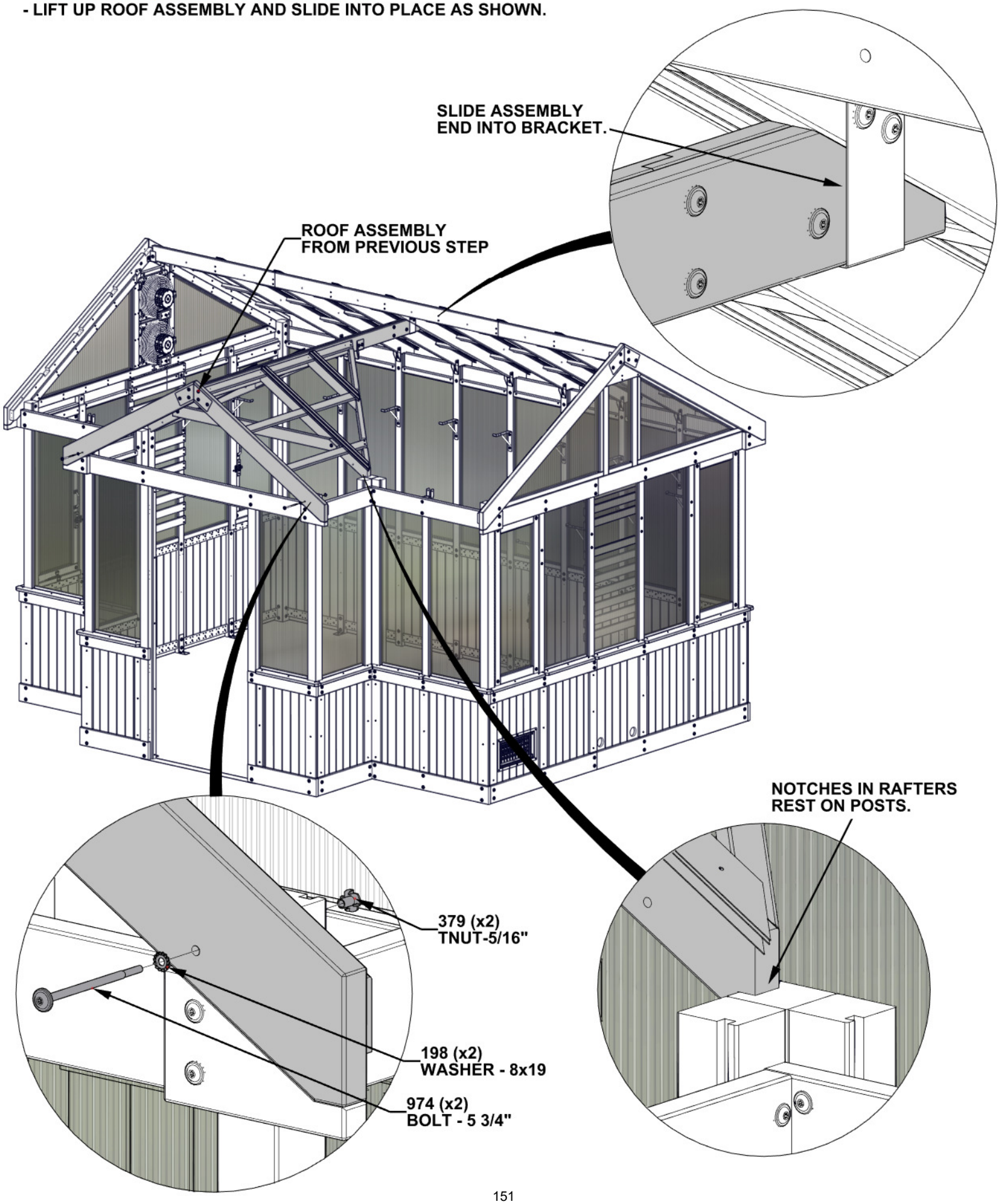

STEP 130 - ROOF ASSEMBLY

QTY	PART NUMBER	DESCRIPTION
2	H100405	WASHER LOCK EXT 6x15
2	H100456	LAG SCREW WH 1/4x2 1/2 BLK
2	H100777	SCREW PFH 10x3 1/2 BLK

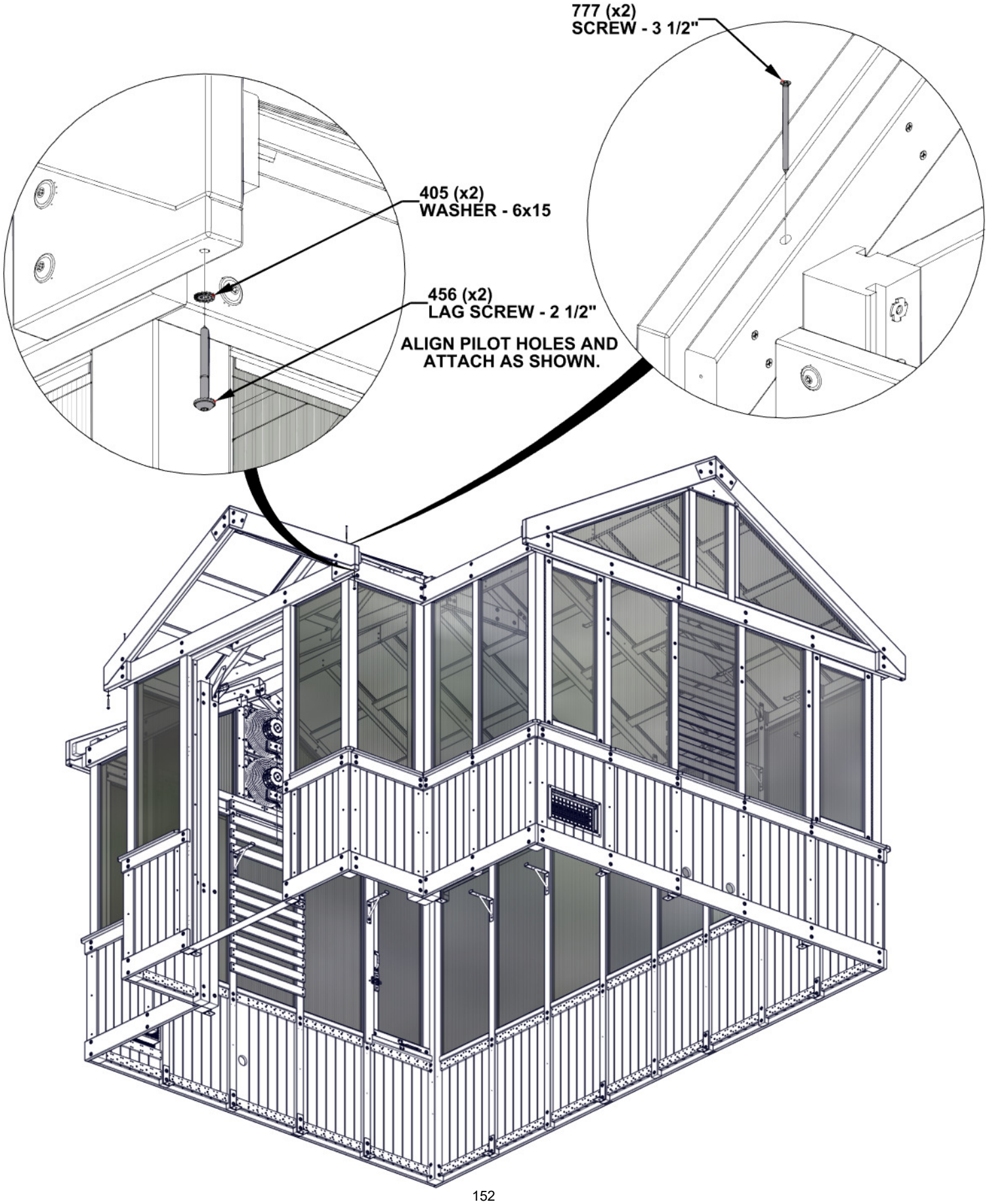

STEP 131 - ROOF ASSEMBLY

QTY	PART NUMBER	DESCRIPTION
4	H100391	SCREW PFH 8x2 BLK

- INSERT SCREWS INTO BRACKET AS SHOWN TO SECURE ROOF PANEL.

- HAND TIGHTEN ONLY.

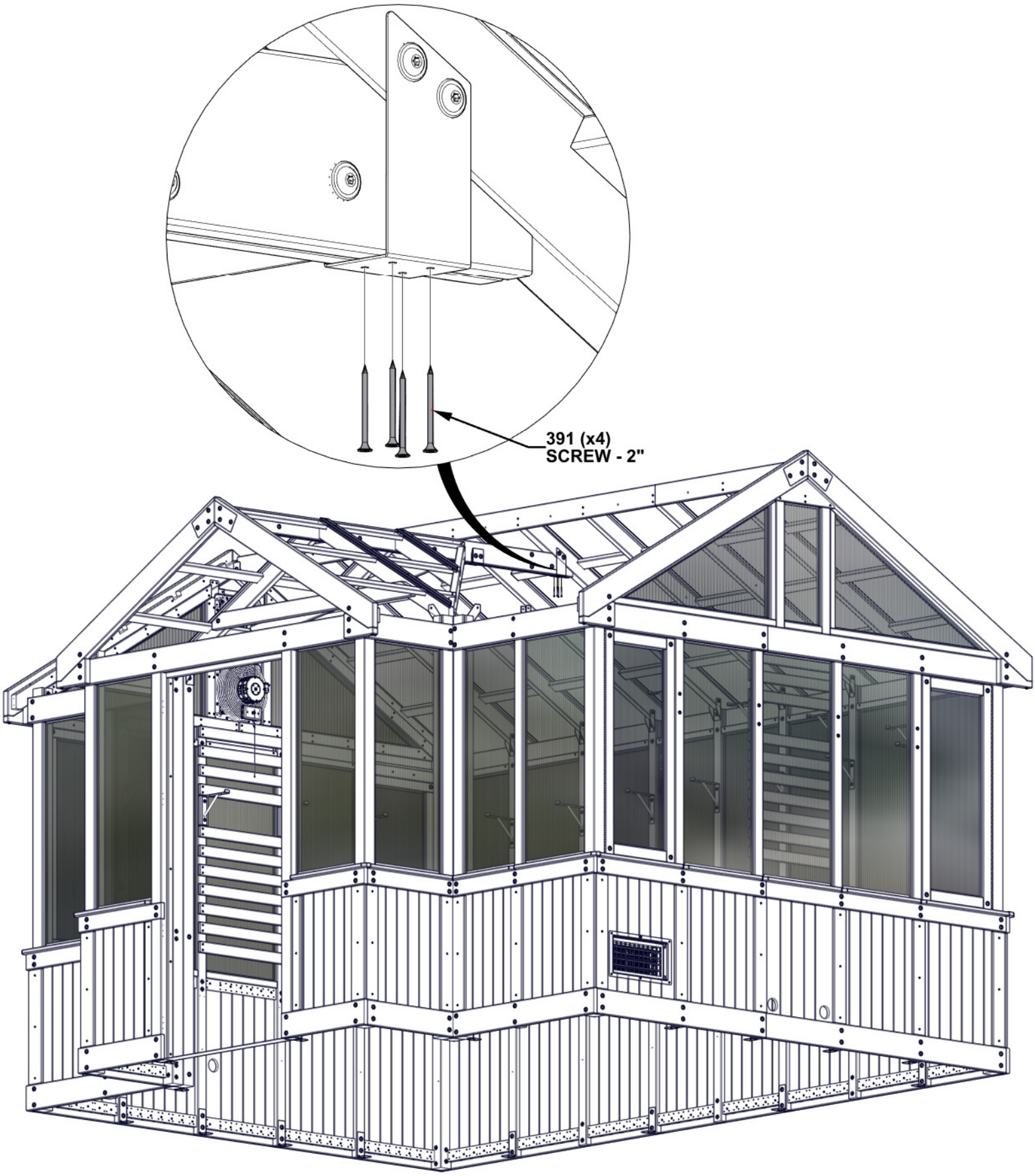

STEP 132 - ROOF ASSEMBLY

QTY	PART NUMBER	DESCRIPTION
4	H100416	BOLT WH 5/16x3 BLK

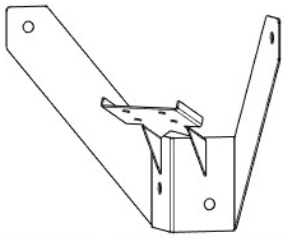

A4M04513 (x2) CORNER RAFTER BRACKET

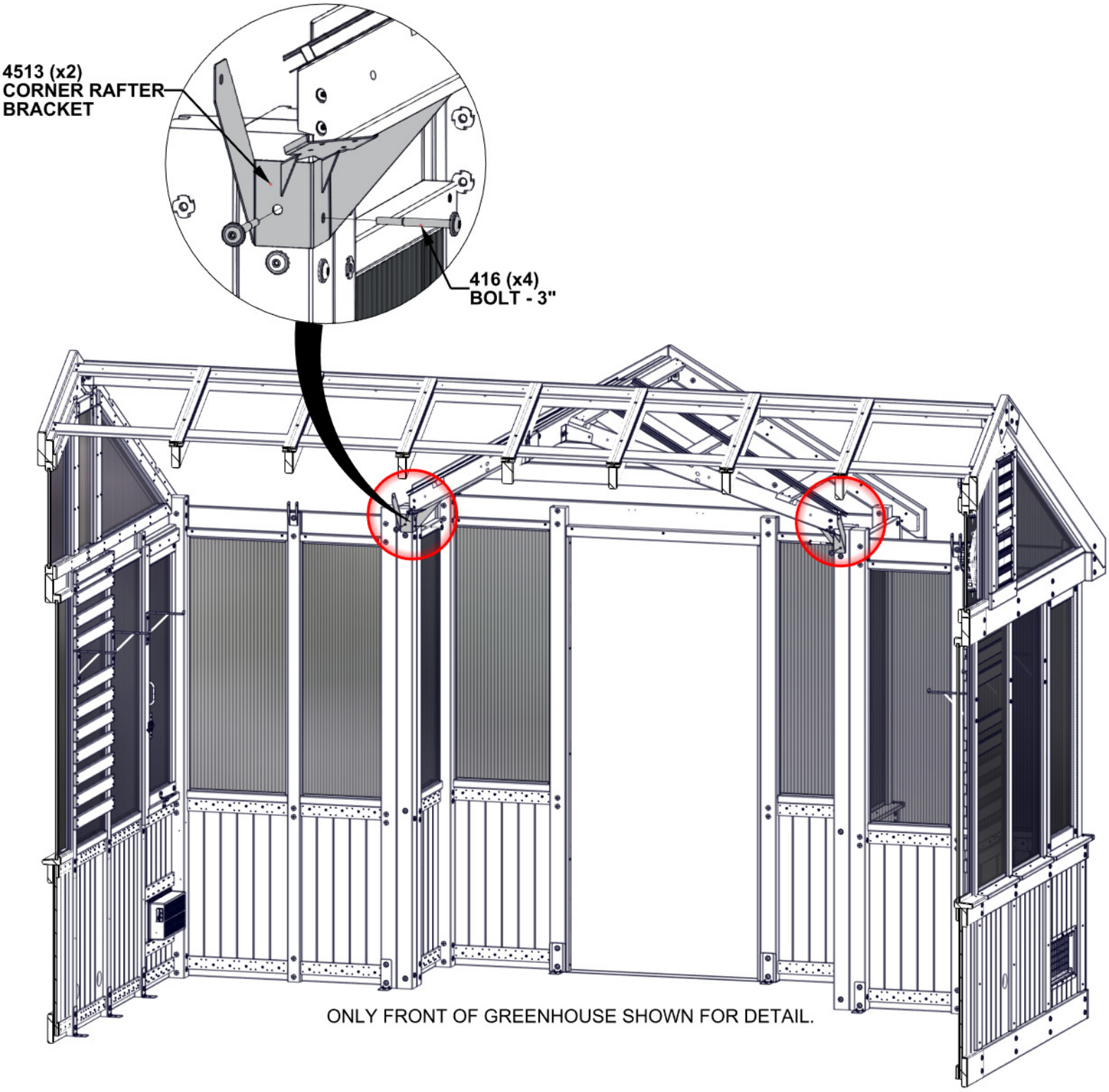

ONLY FRONT OF GREENHOUSE SHOWN FOR DETAIL.

STEP 133 - ROOF ASSEMBLY

QTY	PART NUMBER	DESCRIPTION
4	H100385	SCREW PFH 8x1 BLK
2	H100457	BOLT WH 5/16x2 BLK
2	H100478	WASHER FLAT 8x27 BLK
2	H100479	NUT LOCK 5/16 BLK

- INSERT SCREWS AFTER OTHER HARDWARE.

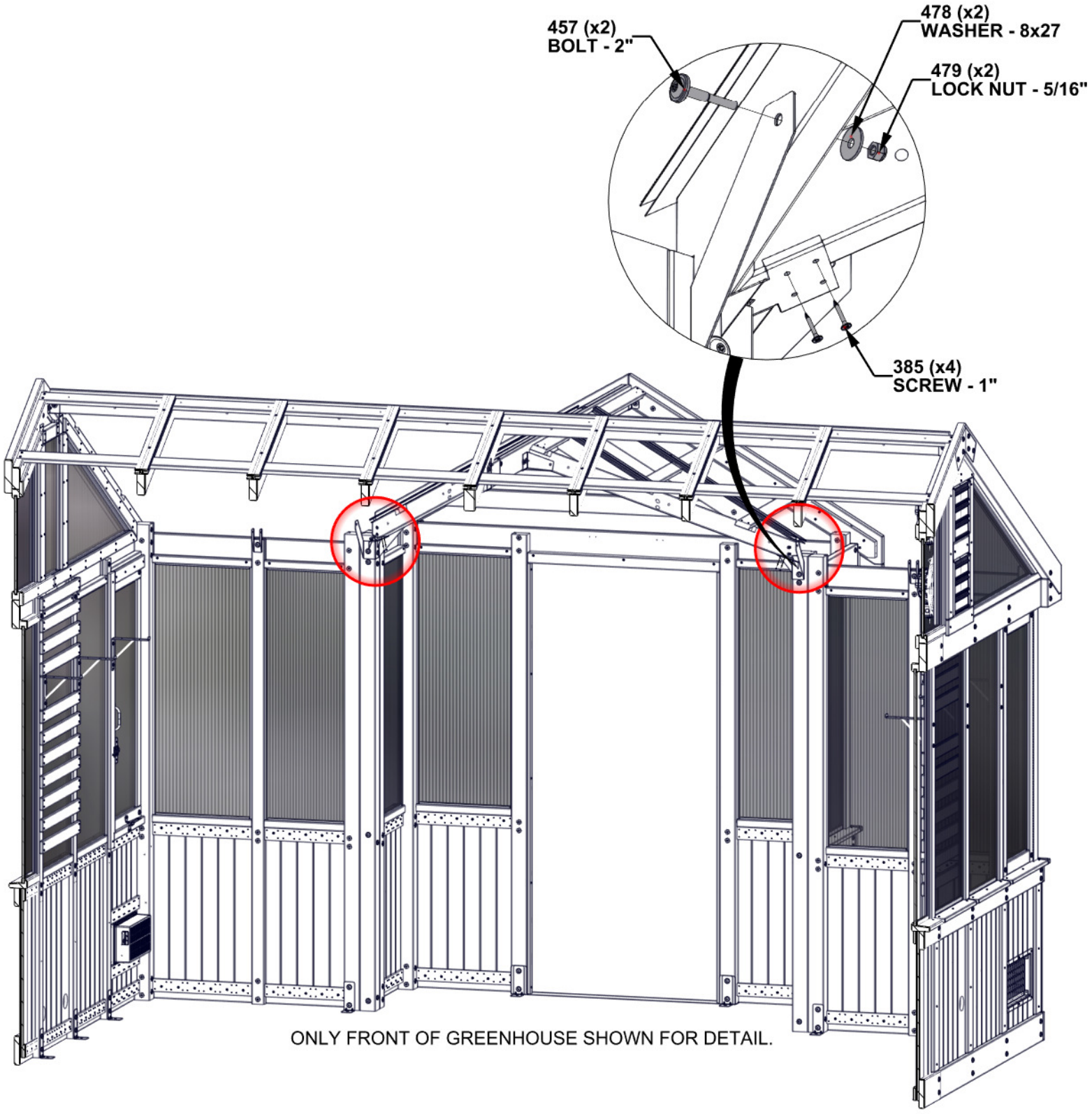

ONLY FRONT OF GREENHOUSE SHOWN FOR DETAIL.

STEP 134 - ROOF ASSEMBLY

QTY	PART NUMBER	DESCRIPTION
6	H100391	SCREW PFH 8x2 BLK

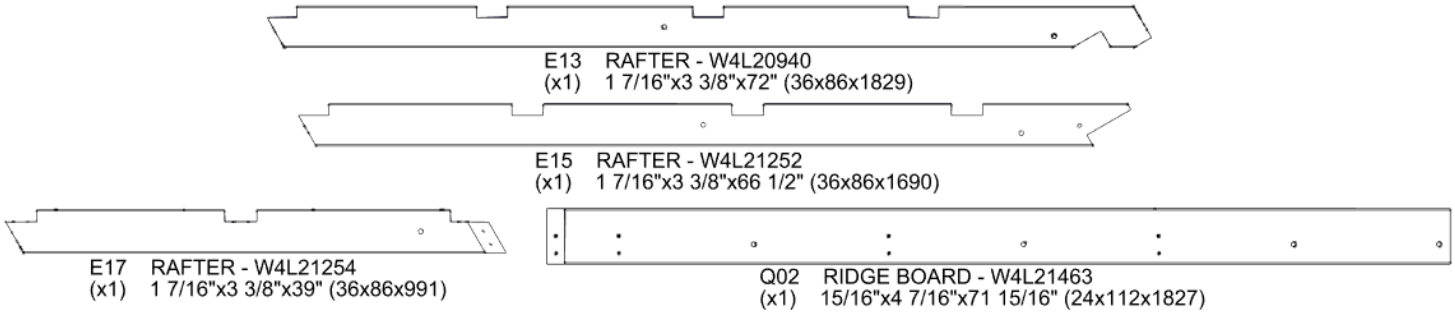

IMPORTANT!

NOTE ALL NOTCH DIRECTIONS AND BOARD PLACEMENT FOR CORRECT ASSEMBLY.

E13 (x1) RAFTER

E15 (x1) RAFTER

391 (x6) SCREW - 2"

ATTACH RIDGE BOARD USING PILOT HOLES IN RAFTERS

E17 (x1) RAFTER

Q02 (x1) RIDGE BOARD

STEP 135 - ROOF ASSEMBLY

QTY	PART NUMBER	DESCRIPTION
1	H101008	SCREW CONFIRMAT 7x3 BLK
2	H101009	SCREW CONFIRMAT 7x3 1/2 BLK

E18 RAFTER - W4L21255
(x1) 1 7/16"x3 3/8"x62 7/8" (36x86x1597)

- ALIGN THROUGH HOLES IN E18 WITH PILOT HOLES IN RAFTERS AND ATTACH AS SHOWN.

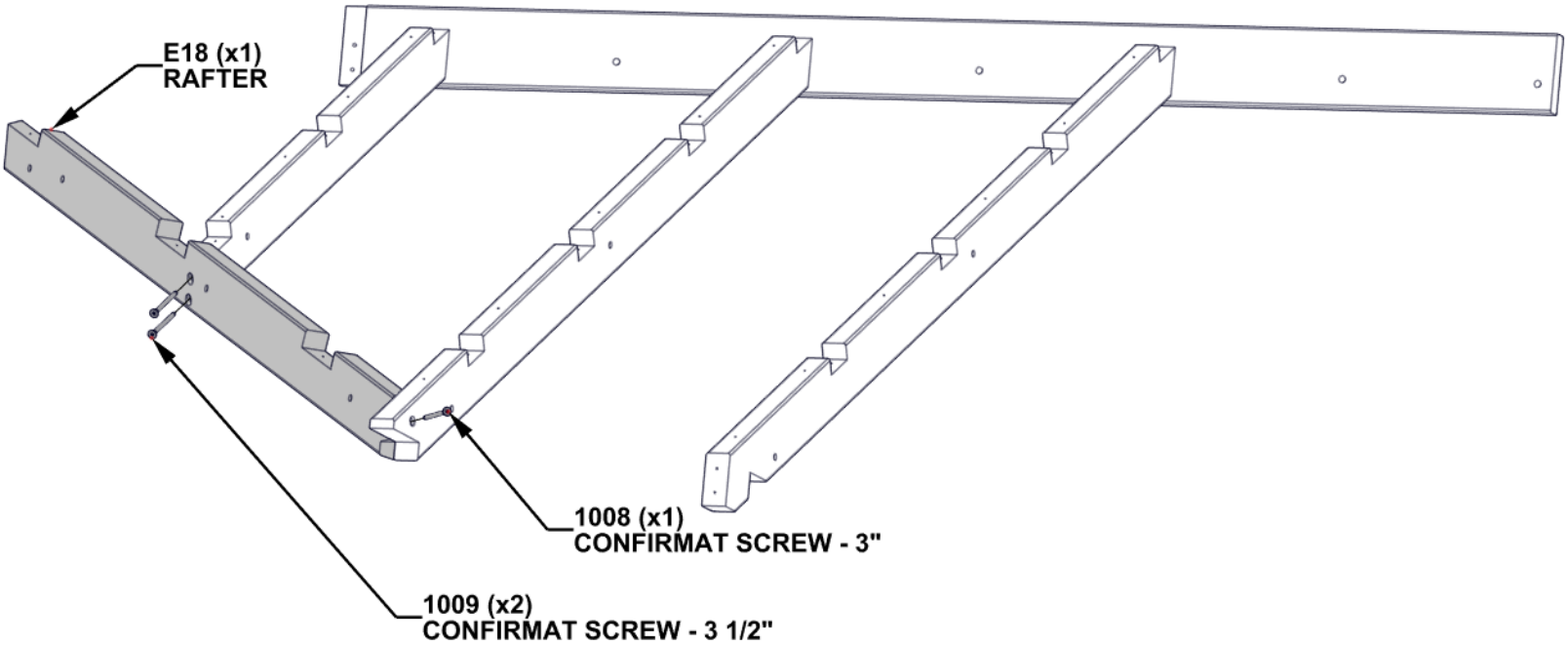

STEP 136 - ROOF ASSEMBLY

QTY	PART NUMBER	DESCRIPTION
3	H100200	SCREW PFH 8x1 1/2 BLK
6	H100201	SCREW PFH 8x2 1/2 BLK
19	H100391	SCREW PFH 8x2 BLK

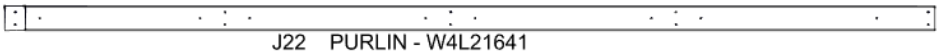

J22 PURLIN - W4L21641
(x1) 15/16"x2 3/8"x88 11/16" (24x60x2252)

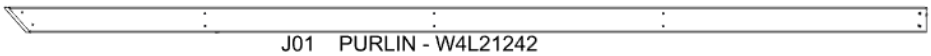

J01 PURLIN - W4L21242
(x1) 15/16"x2 3/8"x86 9/16" (24x60x2199)

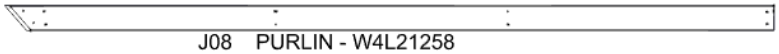

J08 PURLIN - W4L21258
(x1) 15/16"x2 3/8"x71 5/16" (24x60x1812)

J09 PURLIN - W4L21259
(x1) 15/16"x2 3/8"x56 1/8" (24x60x1426)

- ATTACH PURLINS USING PILOT HOLES IN RAFTERS.

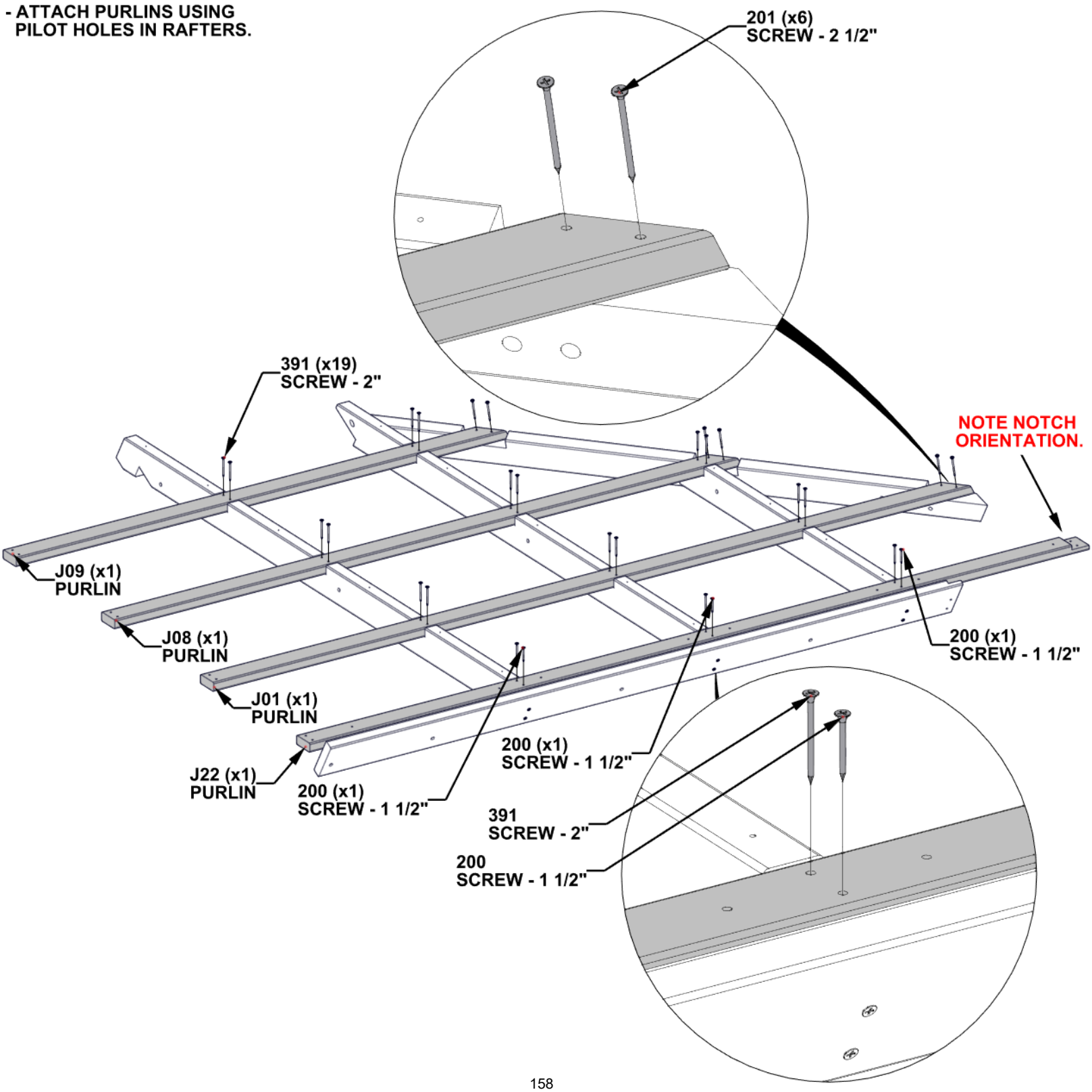

STEP 137 - ROOF ASSEMBLY

QTY	PART NUMBER	DESCRIPTION
13	H101469	SCREW PWH 8x15x1 1/2 BLK

A6P01211 POLY SPLICE
(x1)

A6P01219 POLY SPLICE
(x1)

A6P01220 POLY SPLICE
(x1)

- ALIGN HOLES IN POLY SPLICES WITH PILOT HOLES IN RAFTERS.
- DO NOT OVERTIGHTEN.

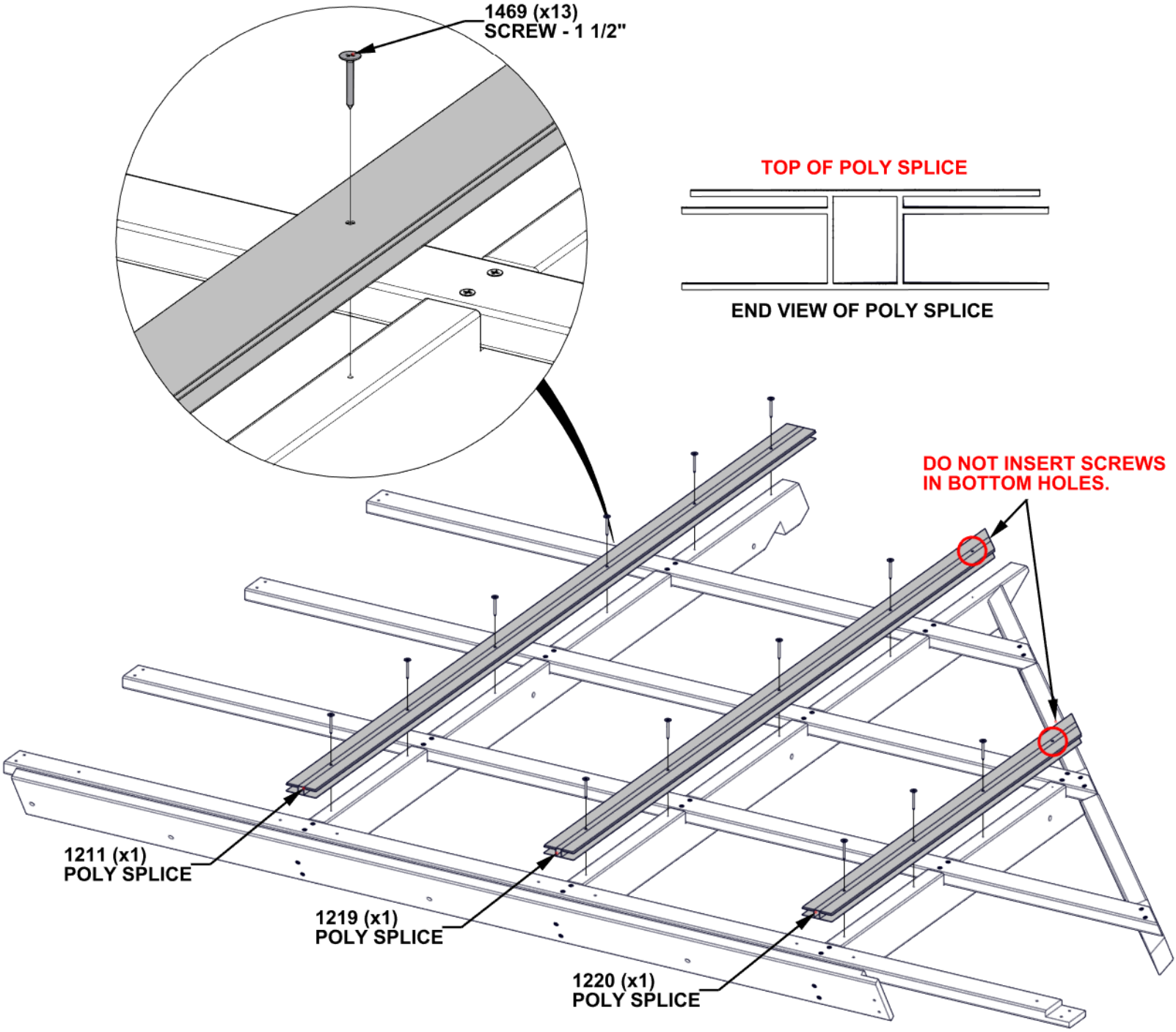

STEP 138 - ROOF ASSEMBLY

QTY	PART NUMBER	DESCRIPTION
1	H100195	BOLT WH 5/16x2 3/4 BLK
3	H100198	WASHER LOCK EXT 8x19
3	H100378	BOLT WH 5/16x1 3/4 BLK
3	H100379	T-NUT 5/16 BLK
1	H100478	WASHER FLAT 8x27 BLK
1	H100479	NUT LOCK 5/16 BLK

- TWO ADULTS REQUIRED FOR THIS STEP.
- INSERT T-NUTS FIRST.
- LIFT UP ROOF ASSEMBLY AND SLIDE INTO PLACE AS SHOWN.
- ALIGN THROUGH HOLES IN RIDGE BOARDS AND INSERT HARDWARE.

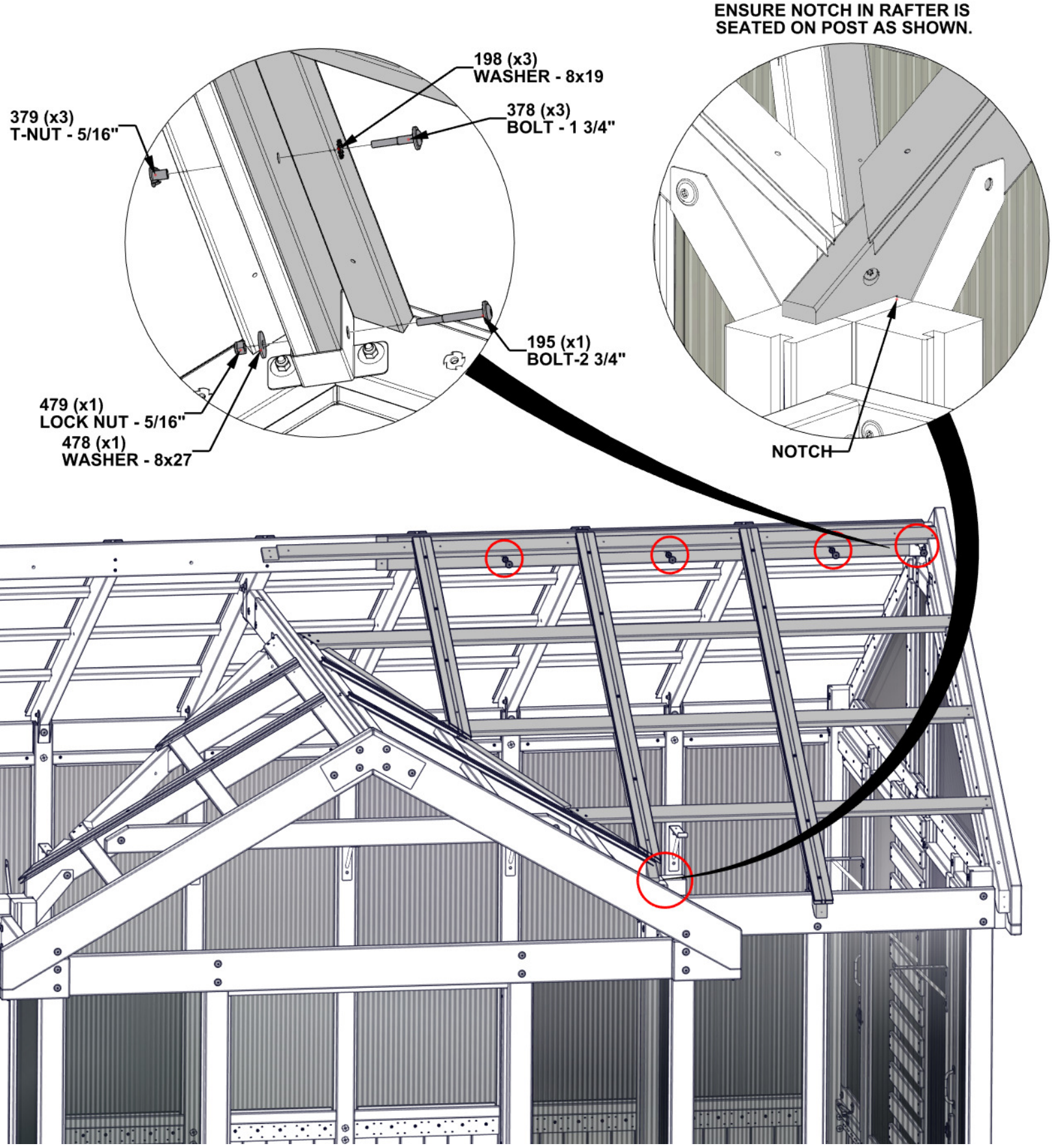

STEP 139 - ROOF ASSEMBLY

QTY	PART NUMBER	DESCRIPTION
1	H100479	NUT LOCK 5/16 BLK
1	H100503	BOLT WH 5/16x3 1/2 BLK
1	H100770	WASHER FLAT 5/16 BLK

- INSTALL HARDWARE INTO VALLEY BRACKET AS SHOWN.

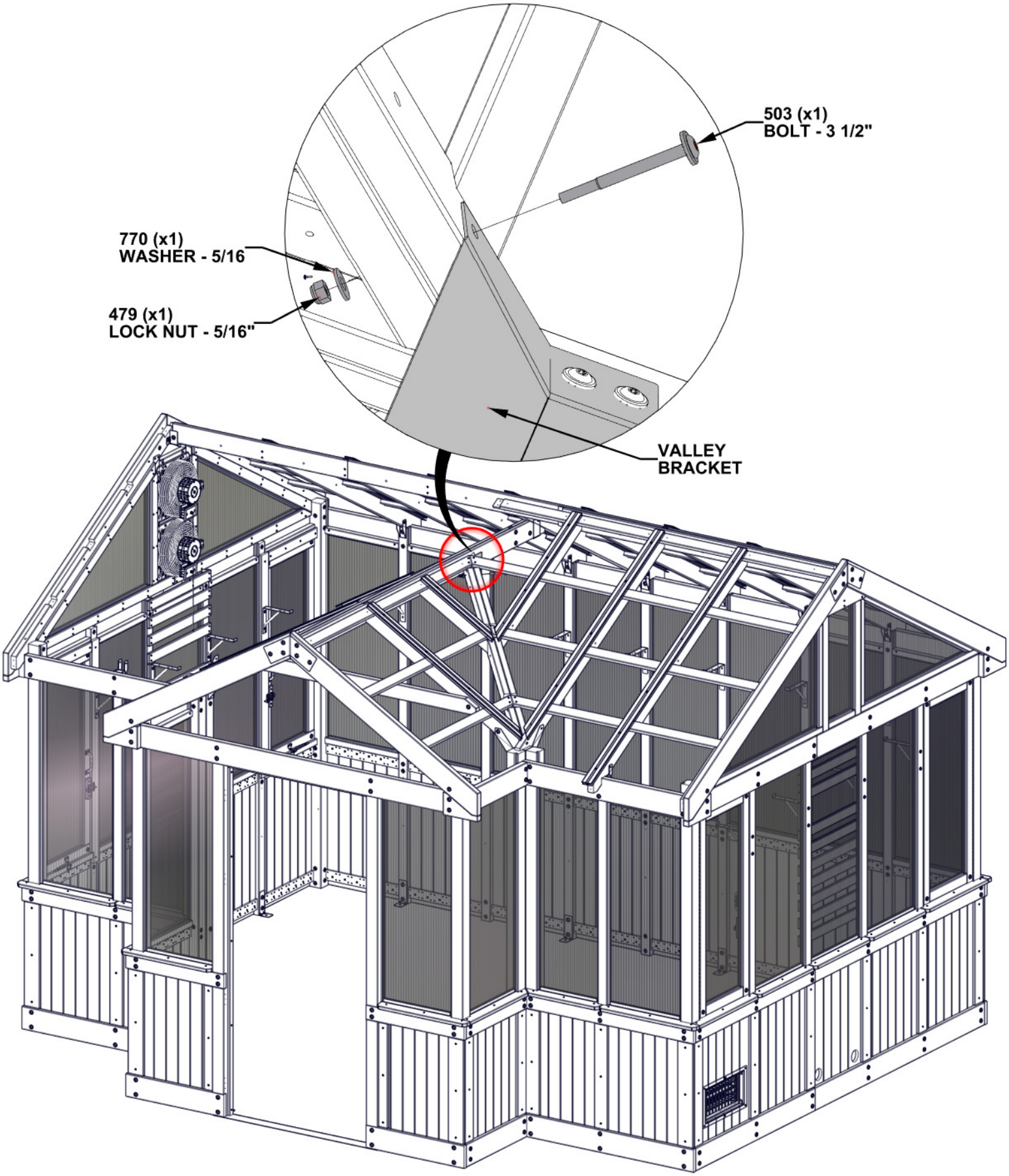

STEP 140 - ROOF ASSEMBLY

QTY	PART NUMBER	DESCRIPTION
2	H100385	SCREW PFH 8x1 BLK
1	H100457	BOLT WH 5/16x2 BLK
1	H100478	WASHER FLAT 8x27 BLK
1	H100479	NUT LOCK 5/16 BLK
1	H100488	BOLT WH 1/4x2 BLK
1	H100630	WASHER FLAT 8x19 BLK
1	H100653	NUT LOCK 1/4 BLK

- INSERT SCREWS AFTER OTHER HARDWARE.

- THE USE OF CLAMPS ARE RECOMMENDED FOR THIS STEP

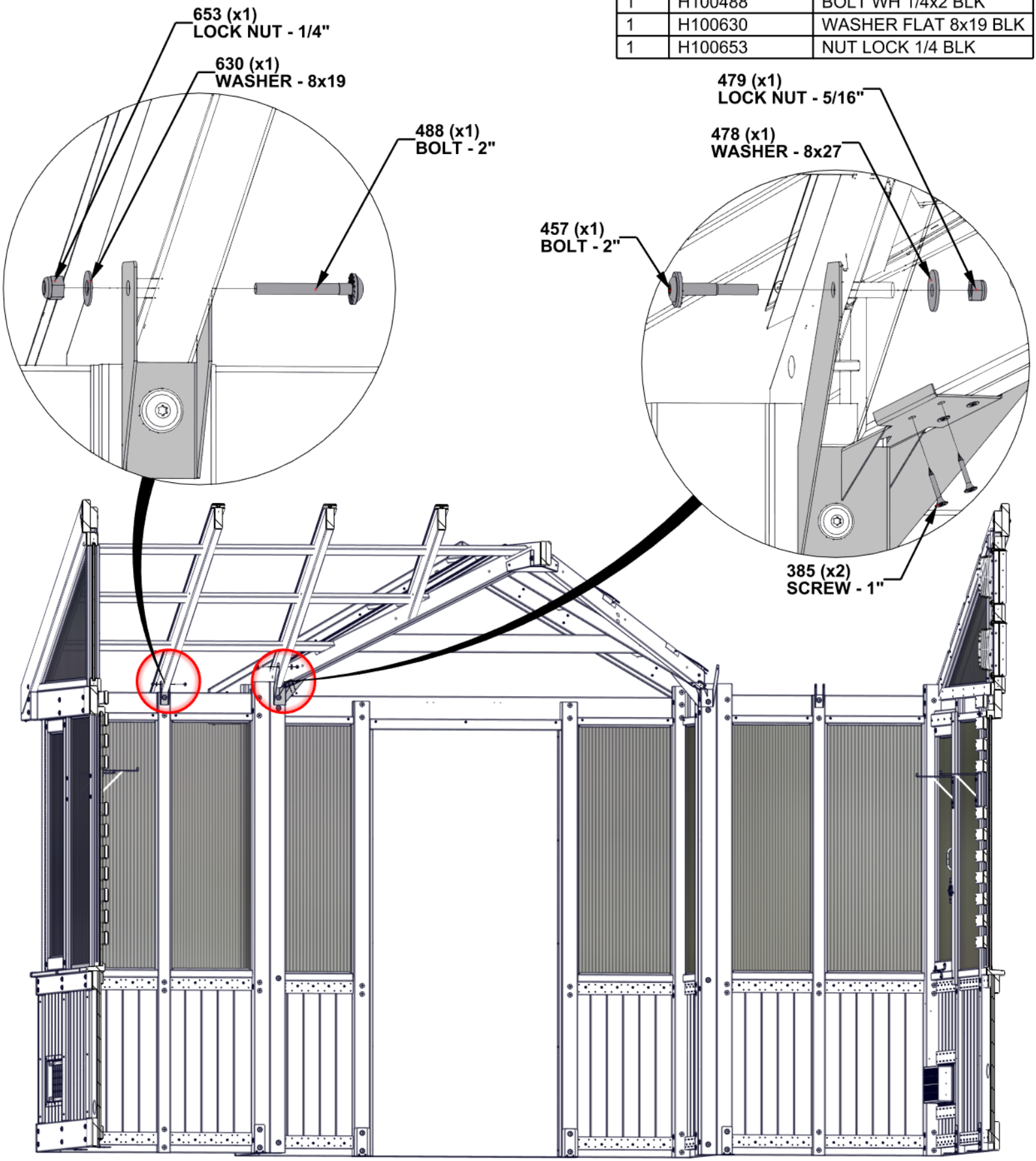

ONLY FRONT OF GREENHOUSE SHOWN FOR DETAIL.

STEP 141 - ROOF ASSEMBLY

QTY	PART NUMBER	DESCRIPTION
3	H100198	WASHER LOCK EXT 8x19
3	H100479	NUT LOCK 5/16 BLK
3	H100503	BOLT WH 5/16x3 1/2 BLK
3	H100770	WASHER FLAT 5/16 BLK

- INSTALL THROUGH HARDWARE AS SHOWN.

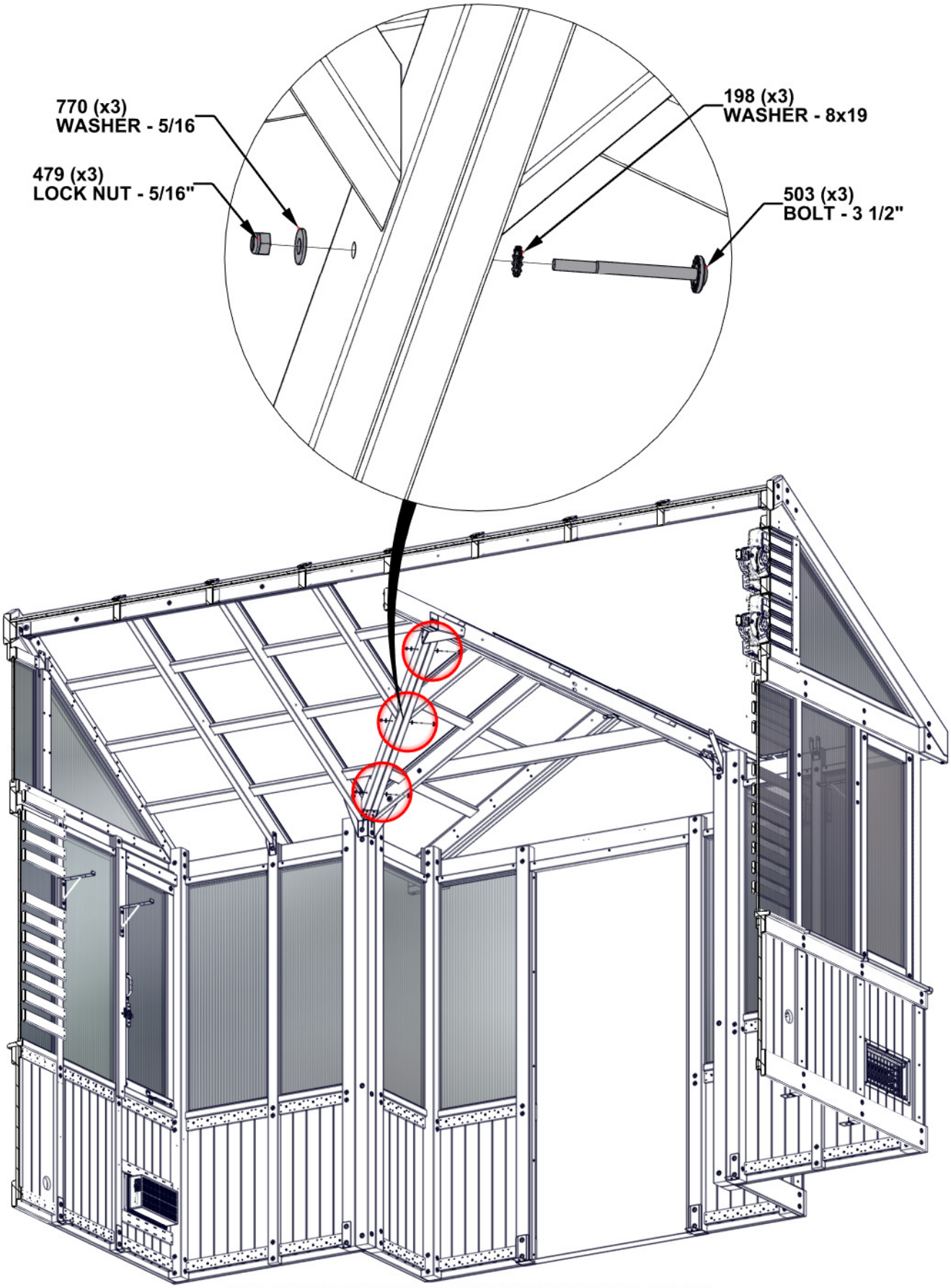

ONLY FRONT OF GREENHOUSE SHOWN FOR DETAIL.

STEP 142 - ROOF ASSEMBLY

QTY	PART NUMBER	DESCRIPTION
8	H100391	SCREW PFH 8x2 BLK

- ALIGN THROUGH HOLES IN PURLINS WITH PILOT HOLES IN RAFTERS AND INSERT SCREWS.

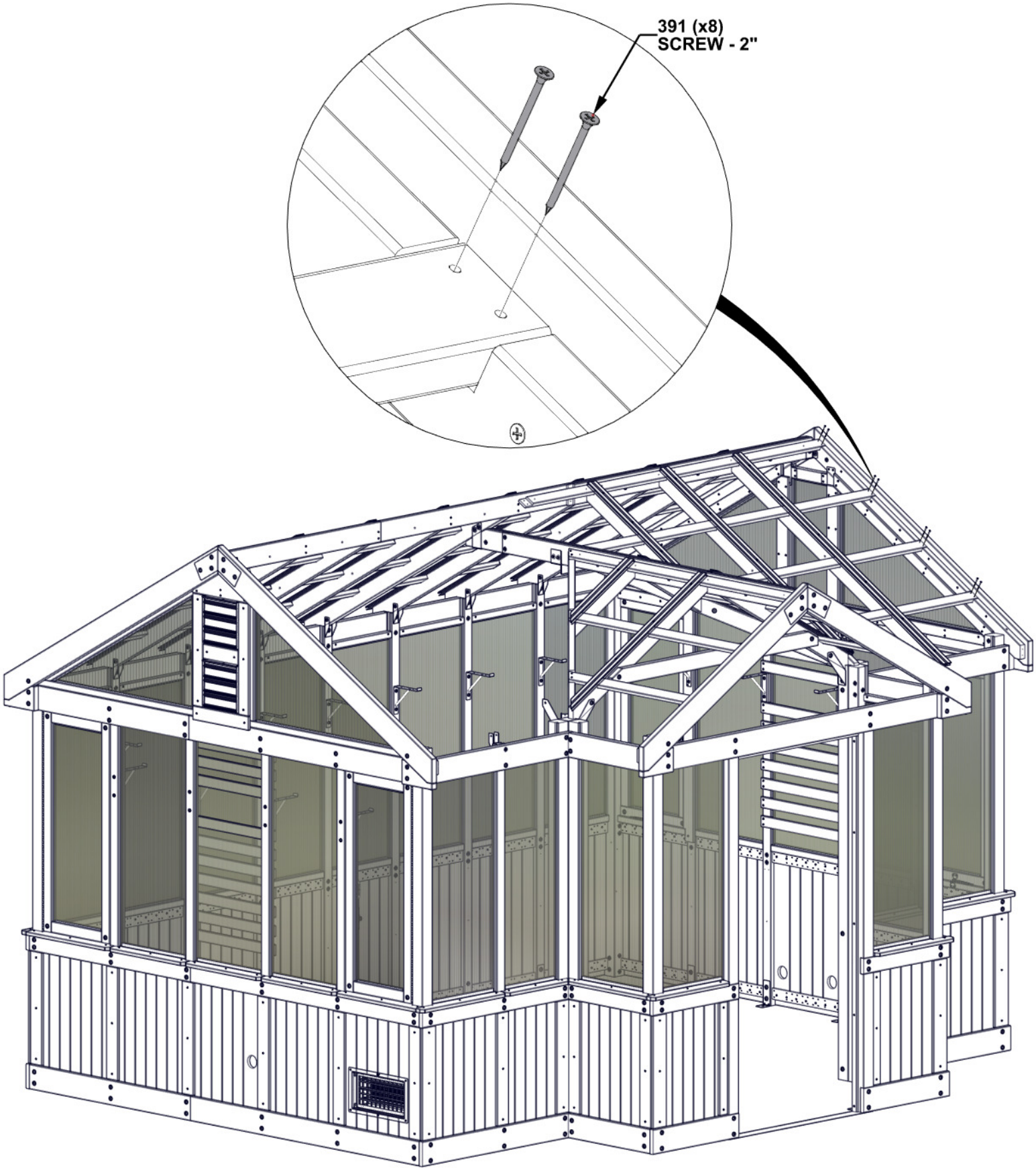

STEP 143 - ROOF ASSEMBLY

QTY	PART NUMBER	DESCRIPTION
6	H100391	SCREW PFH 8x2 BLK

E13 RAFTER - W4L20940
(x1) 1 7/16"x3 3/8"x72" (36x86x1829)

E22 RAFTER - W4L21271
(x1) 1 7/16"x3 3/8"x39" (36x86x991)

E26 RAFTER - W4L21275
(x1) 1 7/16"x3 3/8"x66 1/2" (36x86x1690)

Q14 RIDGE BOARD - W4L21464
(x1) 15/16"x4 7/16"x70 1/2" (24x112x1791)

IMPORTANT!

NOTE ALL NOTCH DIRECTIONS AND BOARD PLACEMENT FOR CORRECT ASSEMBLY.

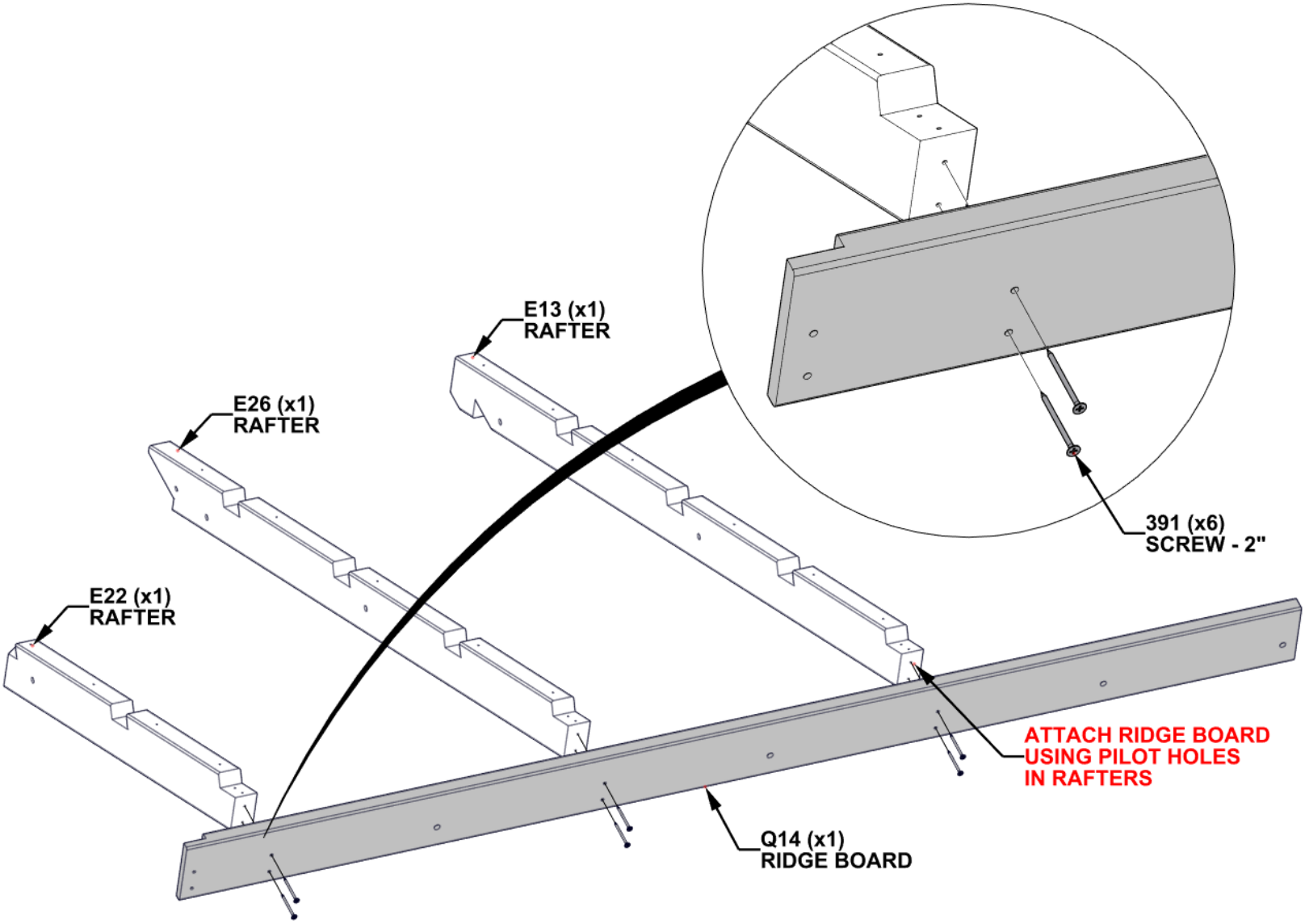

STEP 144 - ROOF ASSEMBLY

QTY	PART NUMBER	DESCRIPTION
1	H101008	SCREW CONFIRMAT 7x3 BLK
2	H101009	SCREW CONFIRMAT 7x3 1/2 BLK

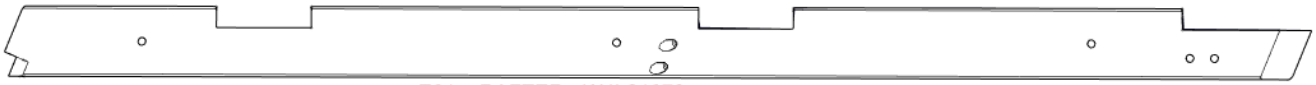

E21 RAFTER - W4L21270
(x1) 1 7/16"x3 3/8"x62 7/8" (36x86x1597)

- ALIGN THROUGH HOLES IN E21 WITH PILOT HOLES IN RAFTERS AND ATTACH AS SHOWN.

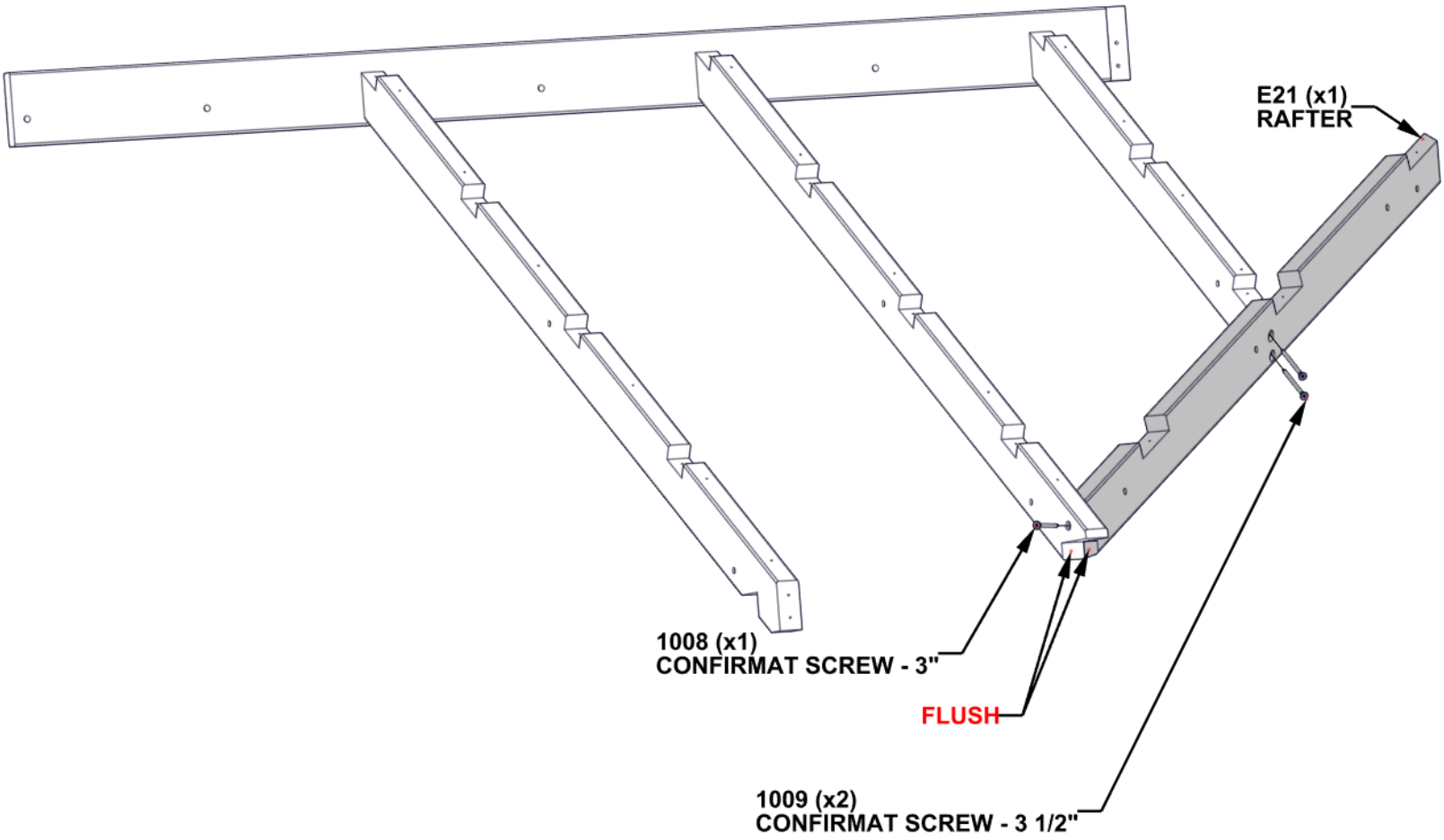

STEP 145 - ROOF ASSEMBLY

QTY	PART NUMBER	DESCRIPTION
3	H100200	SCREW PFH 8x1 1/2 BLK
6	H100201	SCREW PFH 8x2 1/2 BLK
19	H100391	SCREW PFH 8x2 BLK

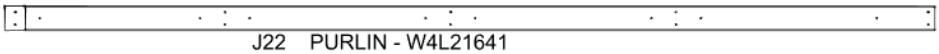

J22 PURLIN - W4L21641
(x1) 15/16"x2 3/8"x88 11/16" (24x60x2252)

J13 PURLIN - W4L21264
(x1) 15/16"x2 3/8"x86 9/16" (24x60x2199)

J14 PURLIN - W4L21265
(x1) 15/16"x2 3/8"x71 5/16" (24x60x1812)

J15 PURLIN - W4L21266
(x1) 15/16"x2 3/8"x56 1/8" (24x60x1426)

- ATTACH PURLINS USING PILOT HOLES IN RAFTERS.

201 (x6)
SCREW - 2 1/2"

391 (x19)
SCREW - 2"

NOTE NOTCH ORIENTATION.

J15 (x1)
PURLIN

J14 (x1)
PURLIN

J13 (x1)
PURLIN

J22 (x1)
PURLIN

200 (x1)
SCREW - 1 1/2"

200 (x1)
SCREW - 1 1/2"

200 (x1)
SCREW - 1 1/2"

391
SCREW - 2"

200
SCREW - 1 1/2"

STEP 146 - ROOF ASSEMBLY

QTY	PART NUMBER	DESCRIPTION
13	H101469	SCREW PWH 8x15x1 1/2 BLK

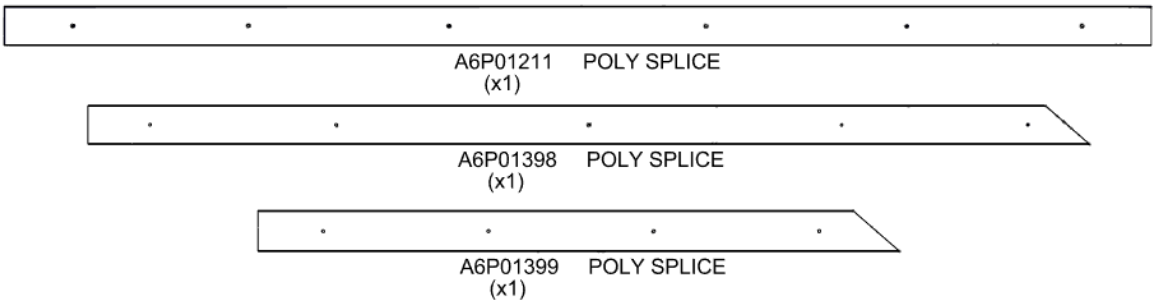

- ALIGN HOLES IN POLY SPLICES WITH PILOT HOLES IN RAFTERS.
- DO NOT OVERTIGHTEN.

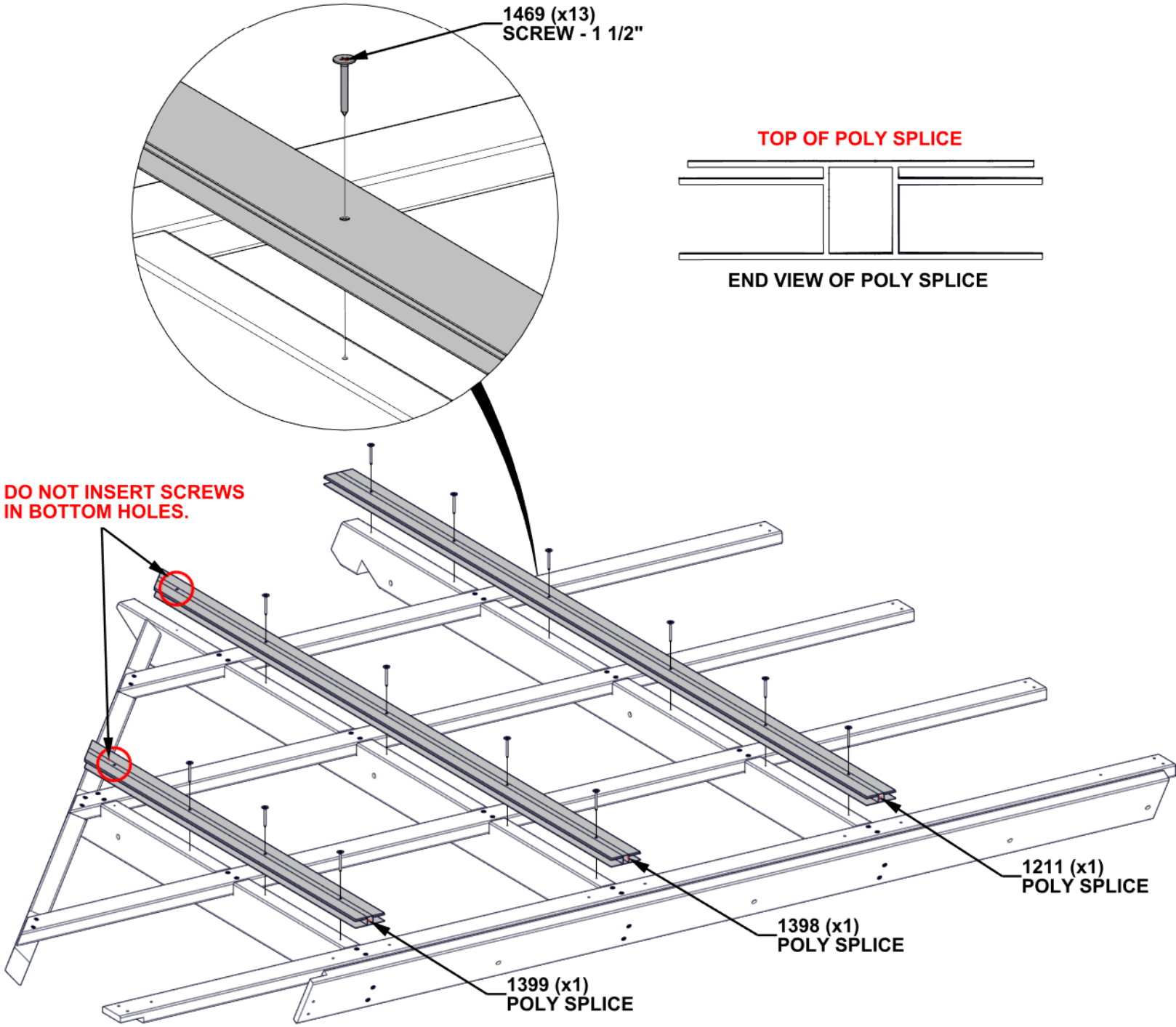

STEP 147 - ROOF ASSEMBLY

- TWO ADULTS REQUIRED FOR THIS STEP.
- INSERT T-NUTS FIRST.
- LIFT UP ROOF ASSEMBLY AND SLIDE INTO PLACE AS SHOWN.
- ALIGN THROUGH HOLES IN RIDGE BOARDS AND INSERT HARDWARE.
- IT IS RECOMMENDED TO PLACE CLAMPS TO PREVENT SAGGING UNTIL ROOF IS SECURE.

QTY	PART NUMBER	DESCRIPTION
1	H100195	BOLT WH 5/16x2 3/4 BLK
3	H100198	WASHER LOCK EXT 8x19
3	H100378	BOLT WH 5/16x1 3/4 BLK
3	H100379	T-NUT 5/16 BLK
1	H100478	WASHER FLAT 8x27 BLK
1	H100479	NUT LOCK 5/16 BLK

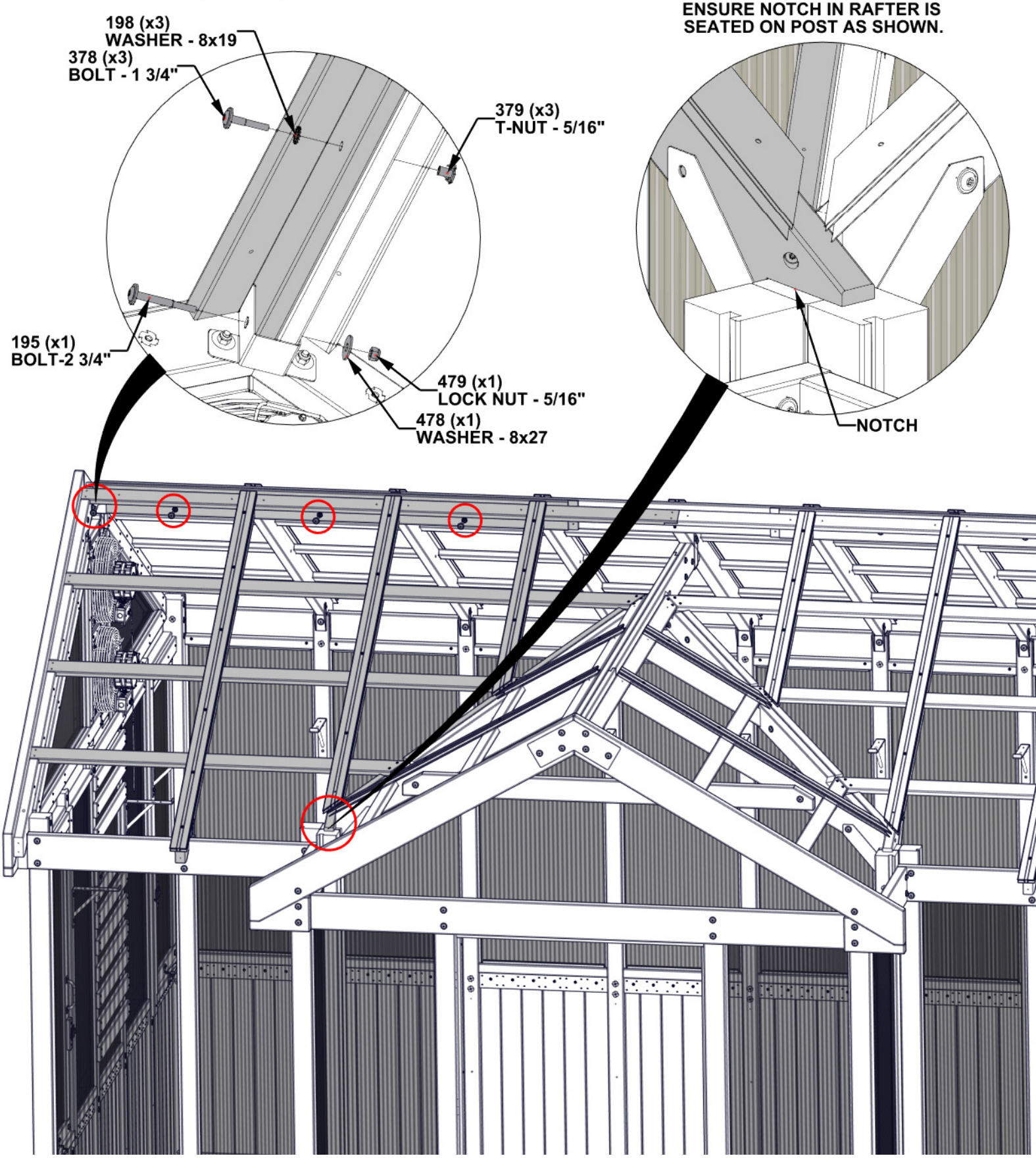

STEP 148 - ROOF ASSEMBLY

QTY	PART NUMBER	DESCRIPTION
1	H100479	NUT LOCK 5/16 BLK
1	H100503	BOLT WH 5/16x3 1/2 BLK
1	H100770	WASHER FLAT 5/16 BLK

- INSTALL HARDWARE INTO VALLEY BRACKET AS SHOWN.

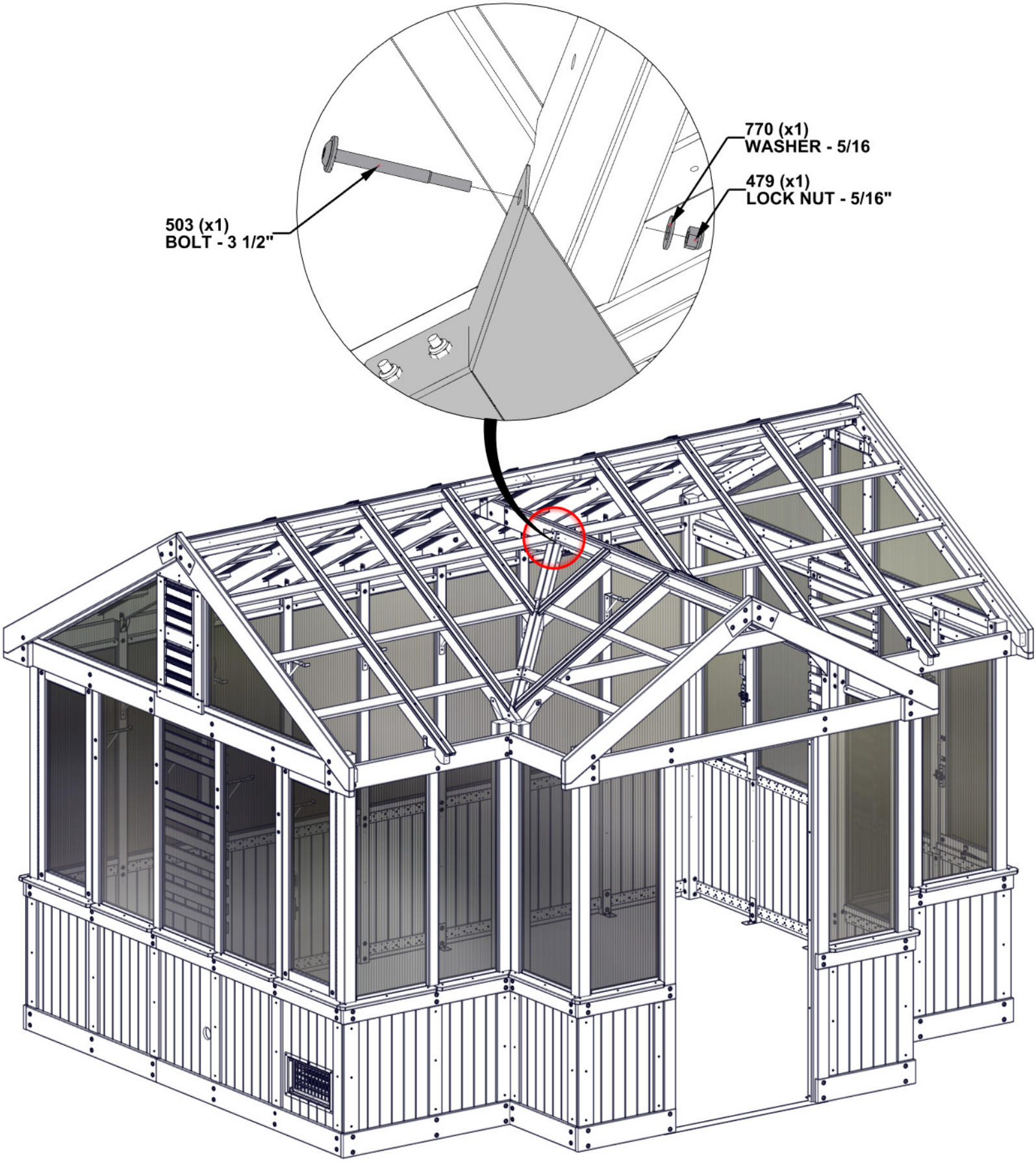

STEP 149 - ROOF ASSEMBLY

QTY	PART NUMBER	DESCRIPTION
2	H100385	SCREW PFH 8x1 BLK
1	H100457	BOLT WH 5/16x2 BLK
1	H100478	WASHER FLAT 8x27 BLK
1	H100479	NUT LOCK 5/16 BLK
1	H100488	BOLT WH 1/4x2 BLK
1	H100630	WASHER FLAT 8x19 BLK
1	H100653	NUT LOCK 1/4 BLK

- INSERT SCREWS AFTER OTHER HARDWARE.

- THE USE OF CLAMPS ARE RECOMMENDED FOR THIS STEP

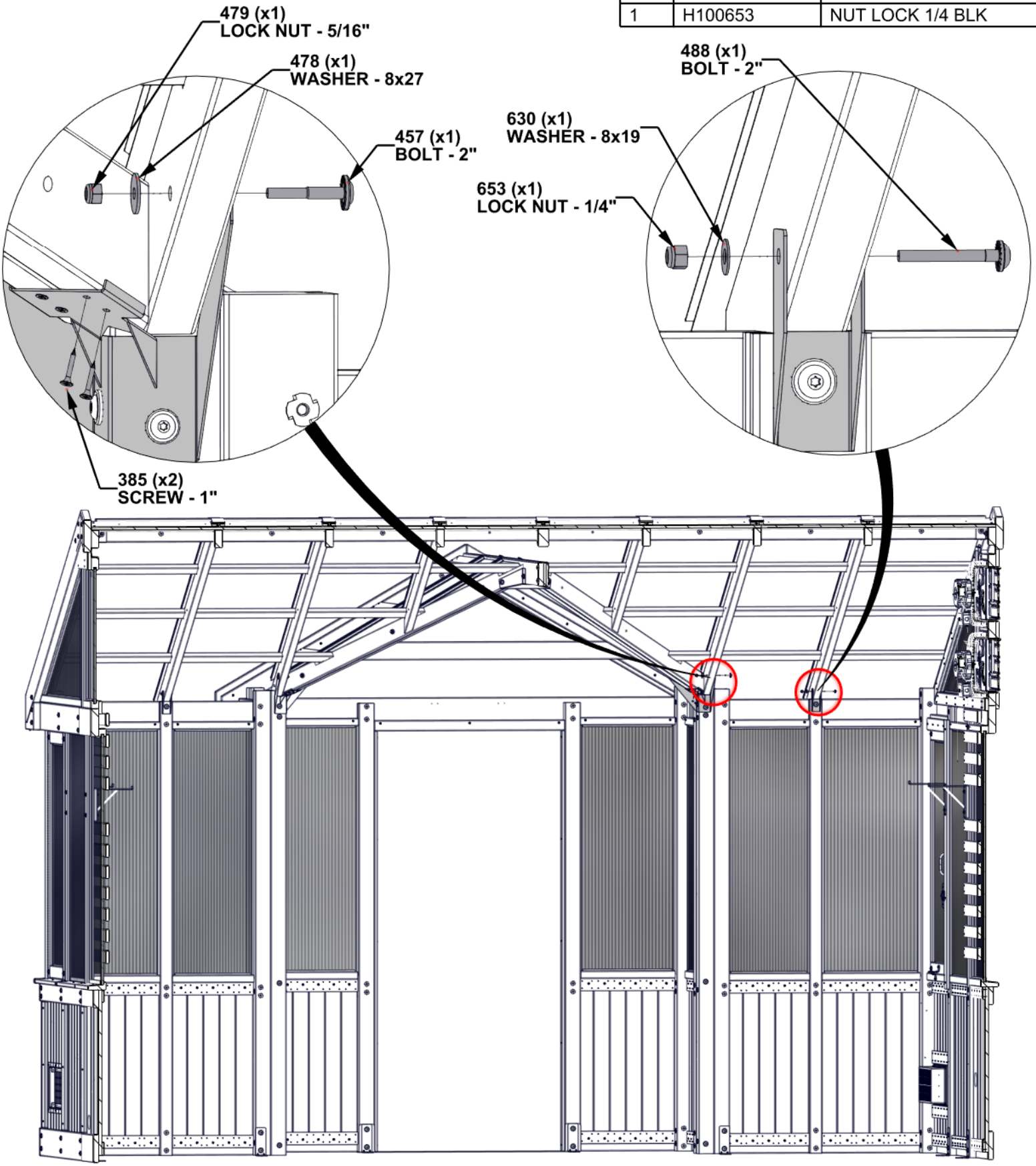

ONLY FRONT OF GREENHOUSE SHOWN FOR DETAIL.

STEP 150 - ROOF ASSEMBLY

QTY	PART NUMBER	DESCRIPTION
3	H100198	WASHER LOCK EXT 8x19
3	H100479	NUT LOCK 5/16 BLK
3	H100503	BOLT WH 5/16x3 1/2 BLK
3	H100770	WASHER FLAT 5/16 BLK

- INSTALL THROUGH HARDWARE AS SHOWN.
- TIGHTEN ALL HARDWARE.

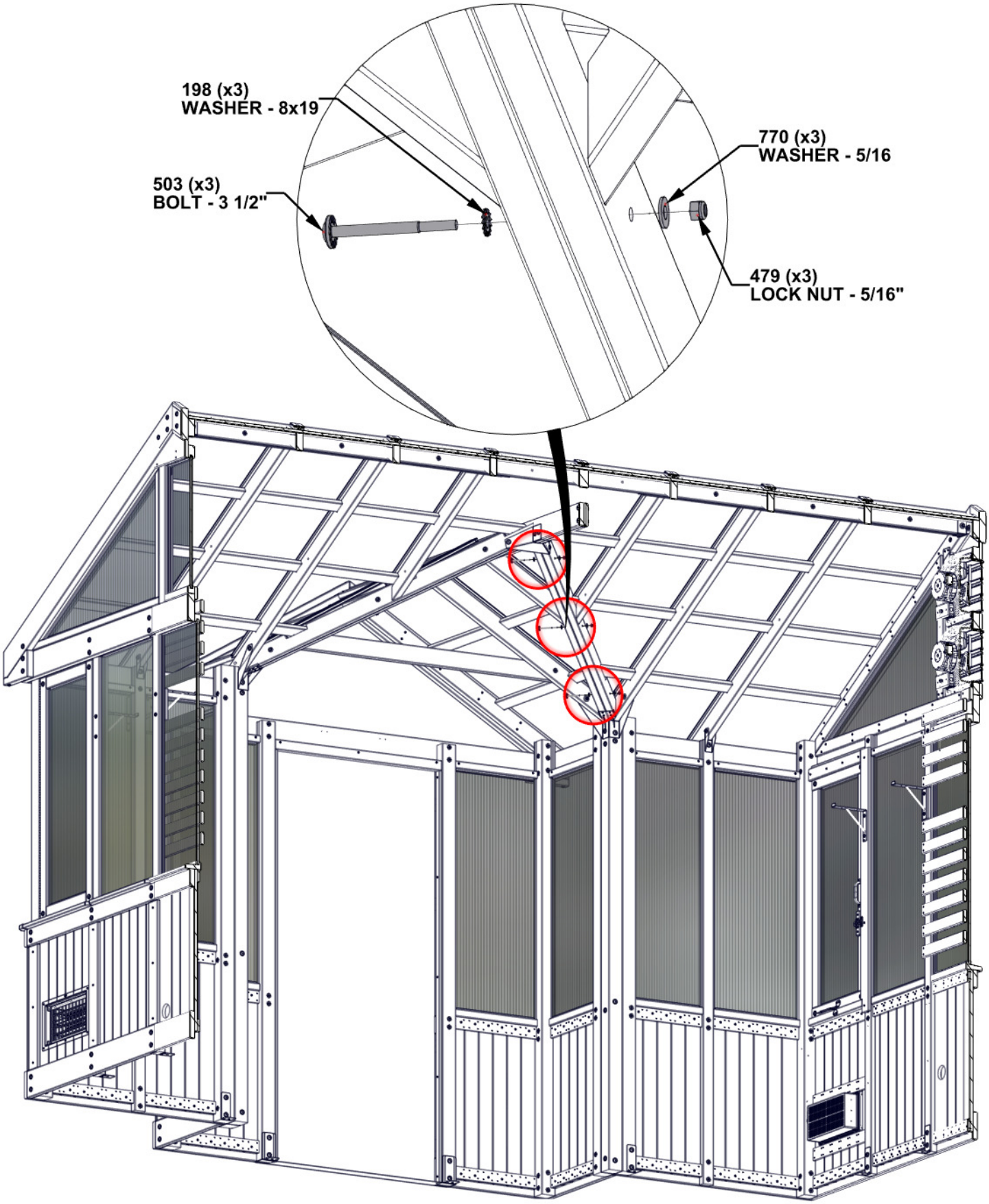

ONLY FRONT OF GREENHOUSE SHOWN FOR DETAIL.

STEP 151 - ROOF ASSEMBLY

QTY	PART NUMBER	DESCRIPTION
8	H100391	SCREW PFH 8x2 BLK

- ALIGN THROUGH HOLES IN PURLINS WITH PILOT HOLES IN RAFTERS AND INSERT SCREWS.

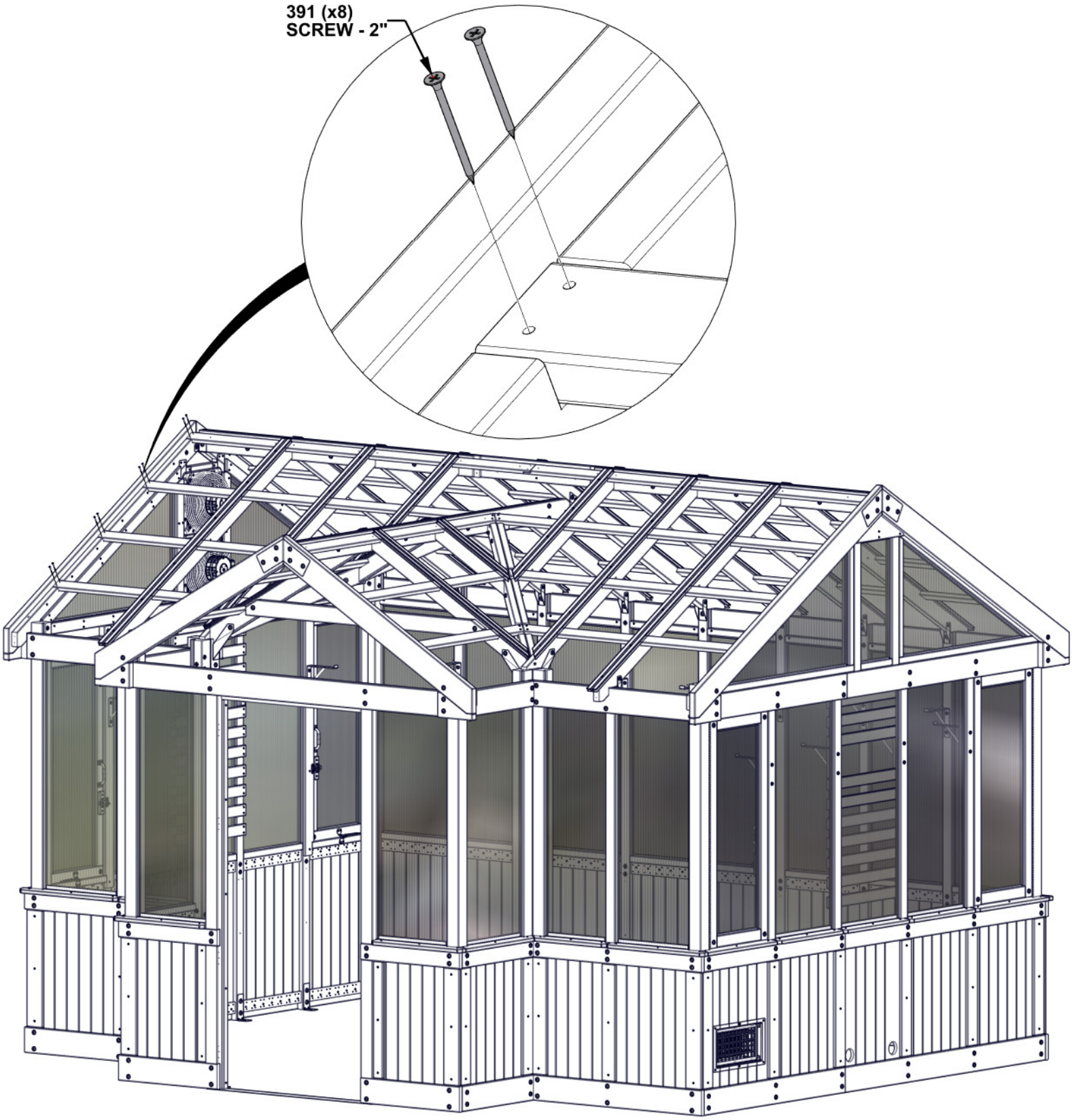

STEP 152 - ROOF ASSEMBLY

QTY	PART NUMBER	DESCRIPTION
2	H100391	SCREW PFH 8x2 BLK

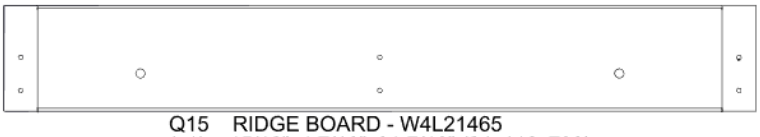

Q15 RIDGE BOARD - W4L21465
(x1) 15/16"x4 7/16"x31 7/16" (24x112x798)

W02 RAFTER - W4L21276
(x1) 1 15/16"x3 3/8"x16" (50x86x407)

- NOTE NOTCHES FOR CORRECT ORIENTATION.

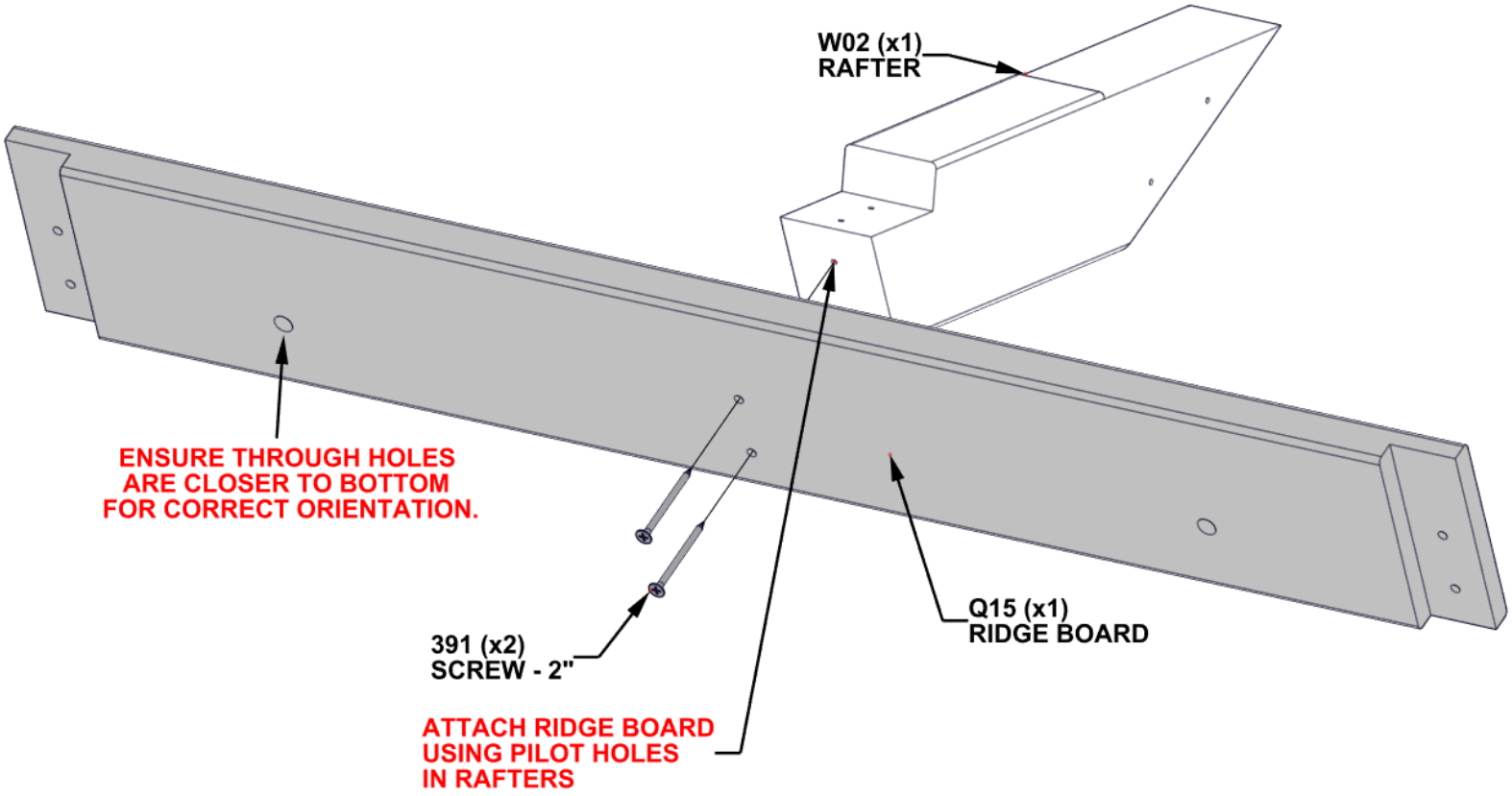

STEP 153 - ROOF ASSEMBLY

QTY	PART NUMBER	DESCRIPTION
2	H100198	WASHER LOCK EXT 8x19
4	H100200	SCREW PFH 8x1 1/2 BLK
2	H100378	BOLT WH 5/16x1 3/4 BLK
2	H100379	T-NUT 5/16 BLK

- INSERT T-NUTS FIRST.
- ALIGN THROUGH HOLES IN RIDGE BOARD AND INSTALL HARDWARE.
- INSTALL SCREWS AFTER OTHER HARDWARE.

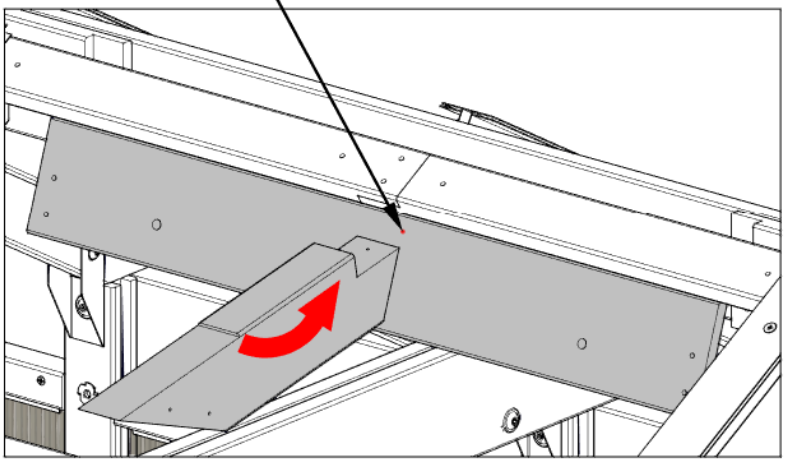

ROTATE ASSEMBLY INTO PLACE UNDER PURLINS AS SHOWN.

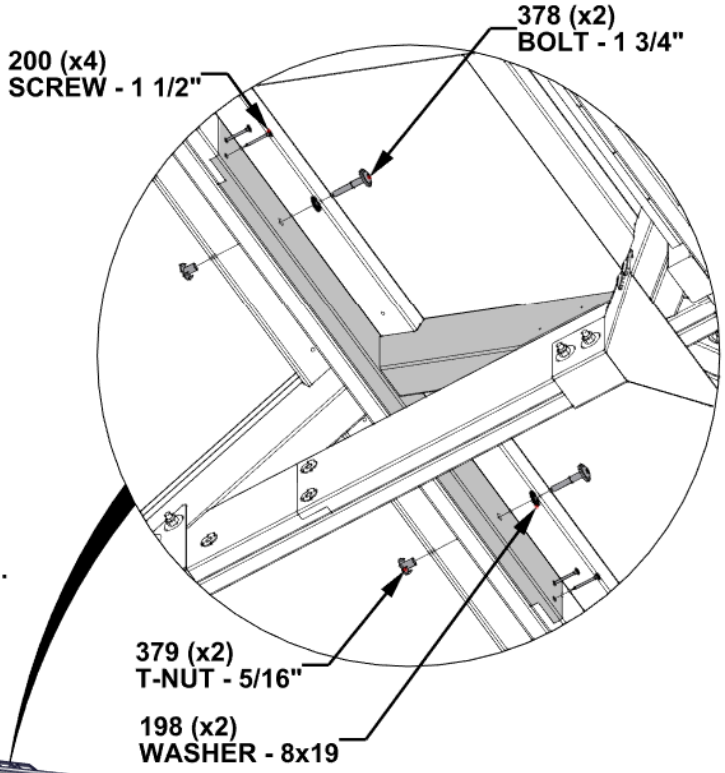

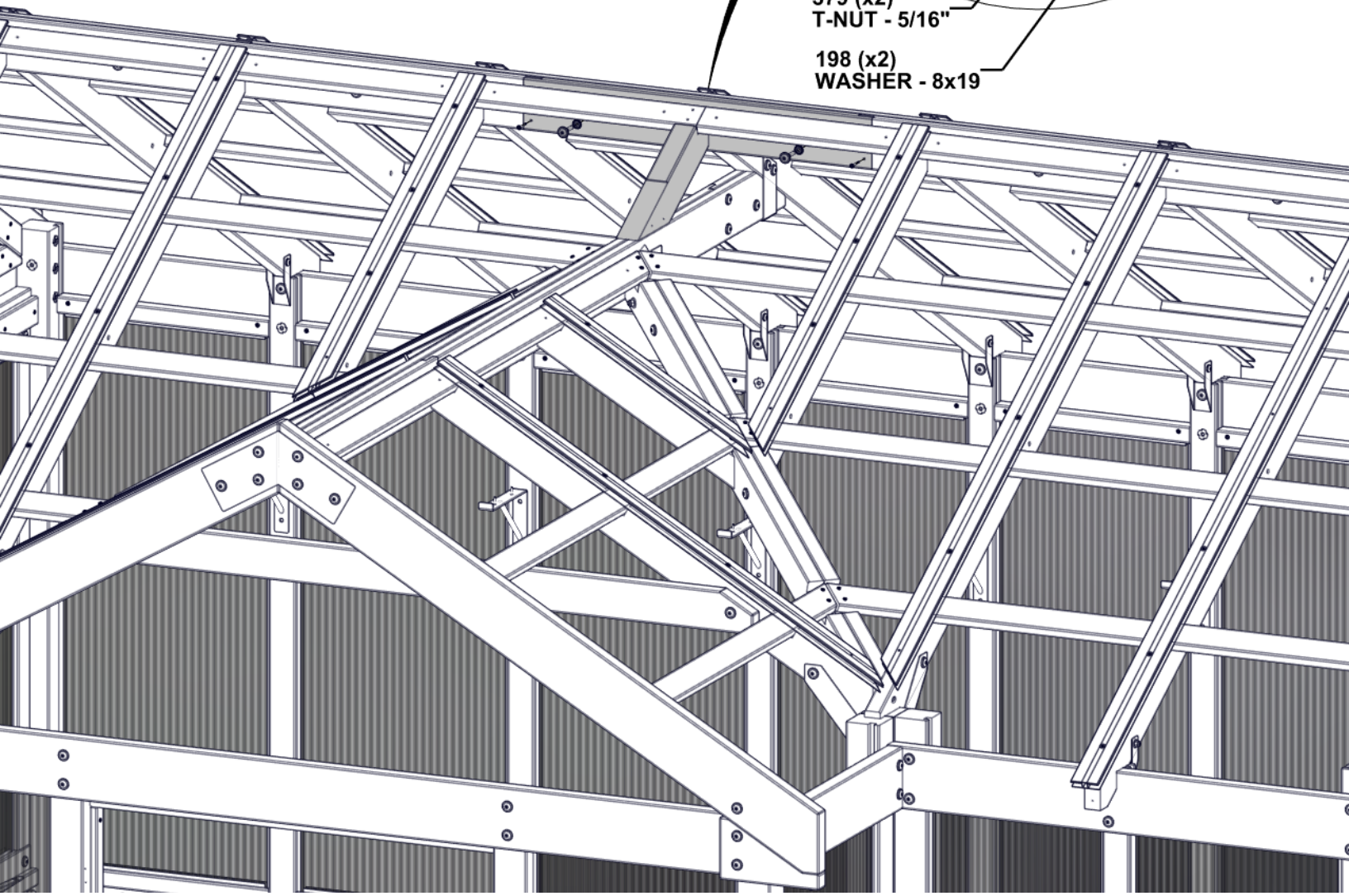

STEP 154 - ROOF ASSEMBLY

QTY	PART NUMBER	DESCRIPTION
1	H100200	SCREW PFH 8x1 1/2 BLK
8	H100385	SCREW PFH 8x1 BLK
1	H100391	SCREW PFH 8x2 BLK

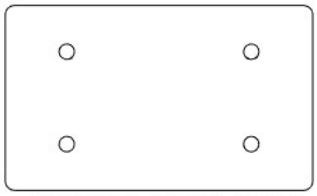

A4M00997 METAL CLEAT
(x2)

- ALIGN HOLES IN METAL CLEAT WITH PILOT HOLES IN RAFTER AND INSERT SCREWS.
- ENSURE RAFTER IS RESTING ON RIDGE BOARDS, THEN INSERT SCREWS INTO METAL CLEAT AND INTO RIDGE BOARDS.
- ENSURE CORRECT PLACEMENT OF SCREWS IN PURLIN.

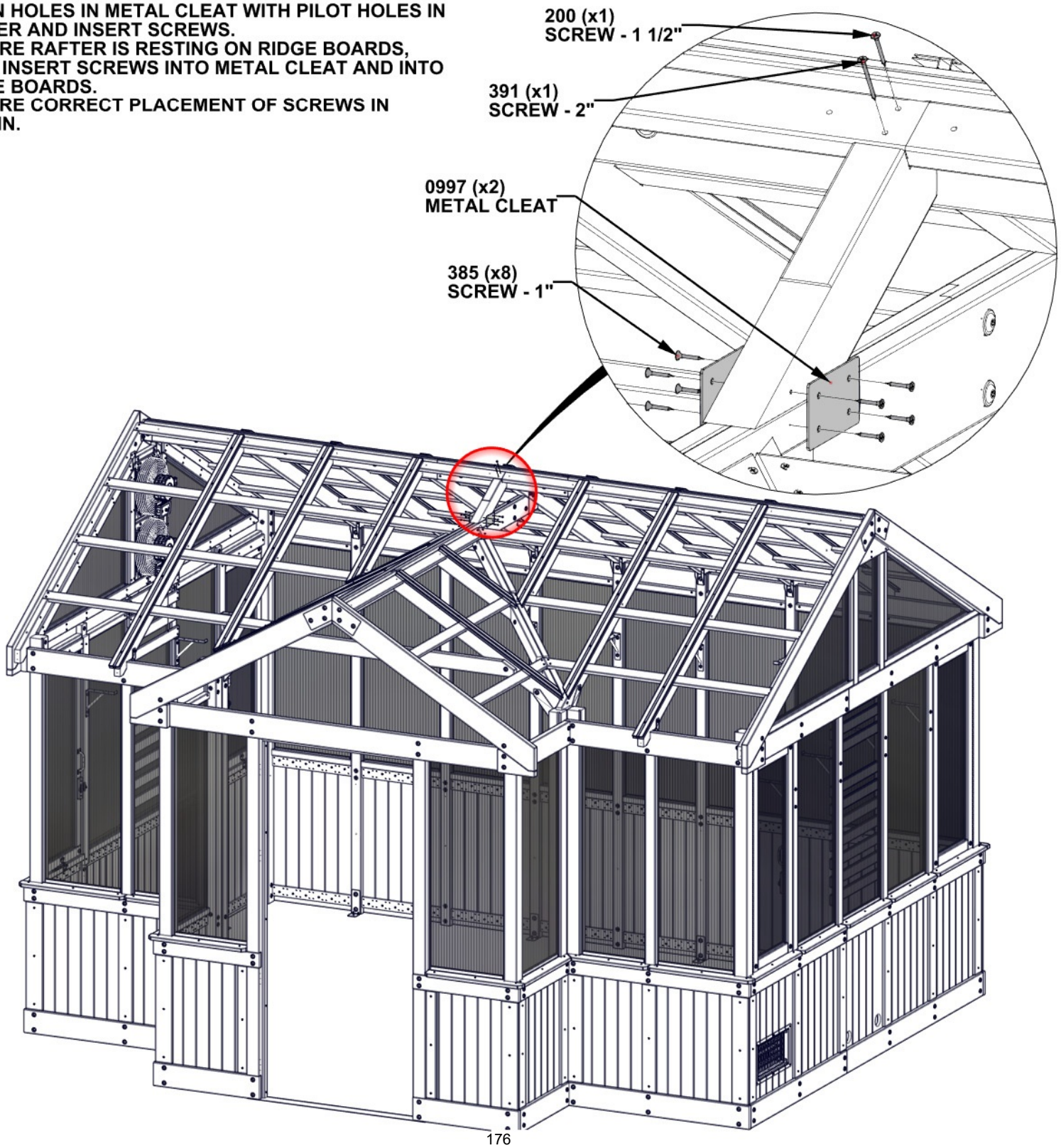

STEP 155 - GABLE ASSEMBLY

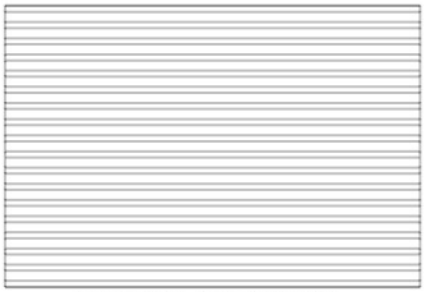

A6P01402 POLY SHEET
(x1)

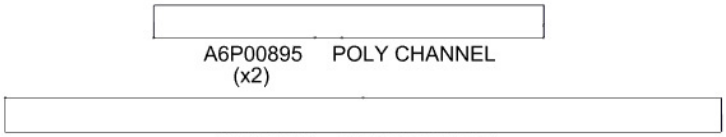

A6P00895 POLY CHANNEL
(x2)

A6P01403 POLY CHANNEL
(x2)

A6P00690 DUST SEAL TAPE

TO APPLY DUST SEAL TAPE AND POLY CHANNEL:
- CUT 2 STRIPS OF DUST SEAL TAPE THE SAME WIDTH AS THE POLY SHEET.
- WRAP DUST SEAL TAPE ALONG EDGE OF POLY SHEET WIDTH.
- AFTER TAPE IS SECURE, PUSH CHANNEL ON OVER THE TAPE, CENTERING ON THE POLY SHEET.
- REPEAT ON THE BOTTOM SIDE OF POLY SHEET.
- ATTACH 1403 POLY CHANNEL TO SIDES.

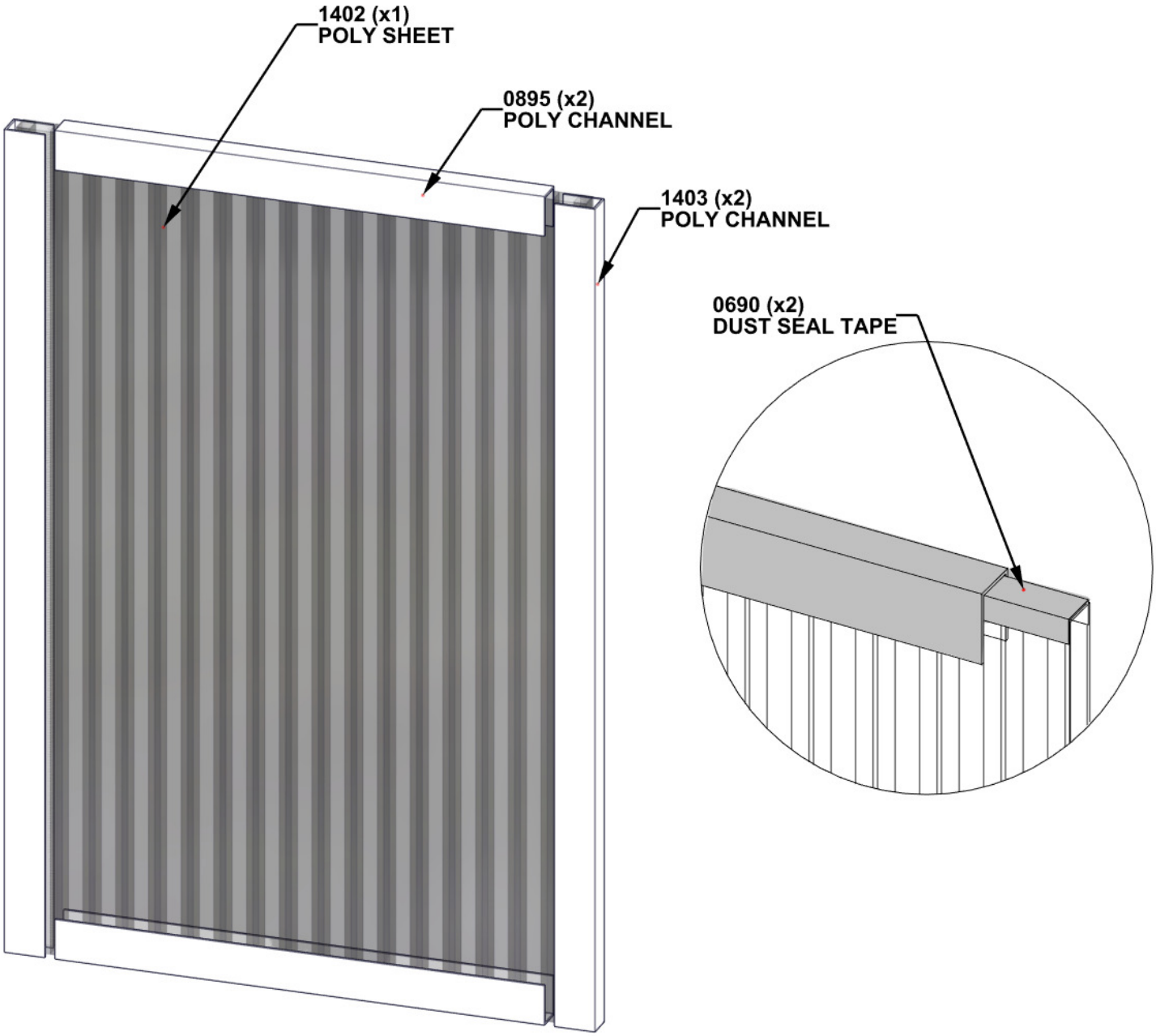

STEP 156 - GABLE ASSEMBLY

QTY	PART NUMBER	DESCRIPTION
4	H101109	SCREW PFH 8x3-1/2 BLK

F11 WINDOW FRAME - W4L21286
(x1) 1 7/16"x2 3/8"x20 15/16" (36x60x532)

F13 WINDOW FRAME - W4L21288
(x1) 1 7/16"x2 3/8"x10 9/16" (36x60x268)

F12 WINDOW FRAME - W4L21287
(x1) 1 7/16"x2 3/8"x20 15/16" (36x60x532)

F14 WINDOW FRAME - W4L21289
(x1) 1 7/16"x2 3/8"x10 9/16" (36x60x268)

REMOVE TAPE LINER ON POLY CHANNELS BEFORE INSTALLING.

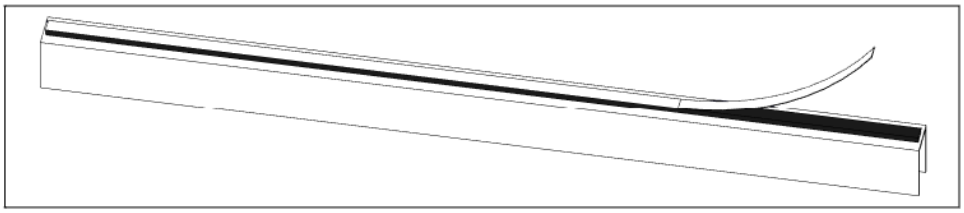

- **BEFORE INSTALLATION REMOVE LINER FROM THE PREVIOUSLY INSTALLED POLY CHANNELS.**
- **FIRMLY PUSH BOARDS ON ENSURING THE WINDOW ASSEMBLY SLIDES ALL THE WAY INTO THE GROOVES.**

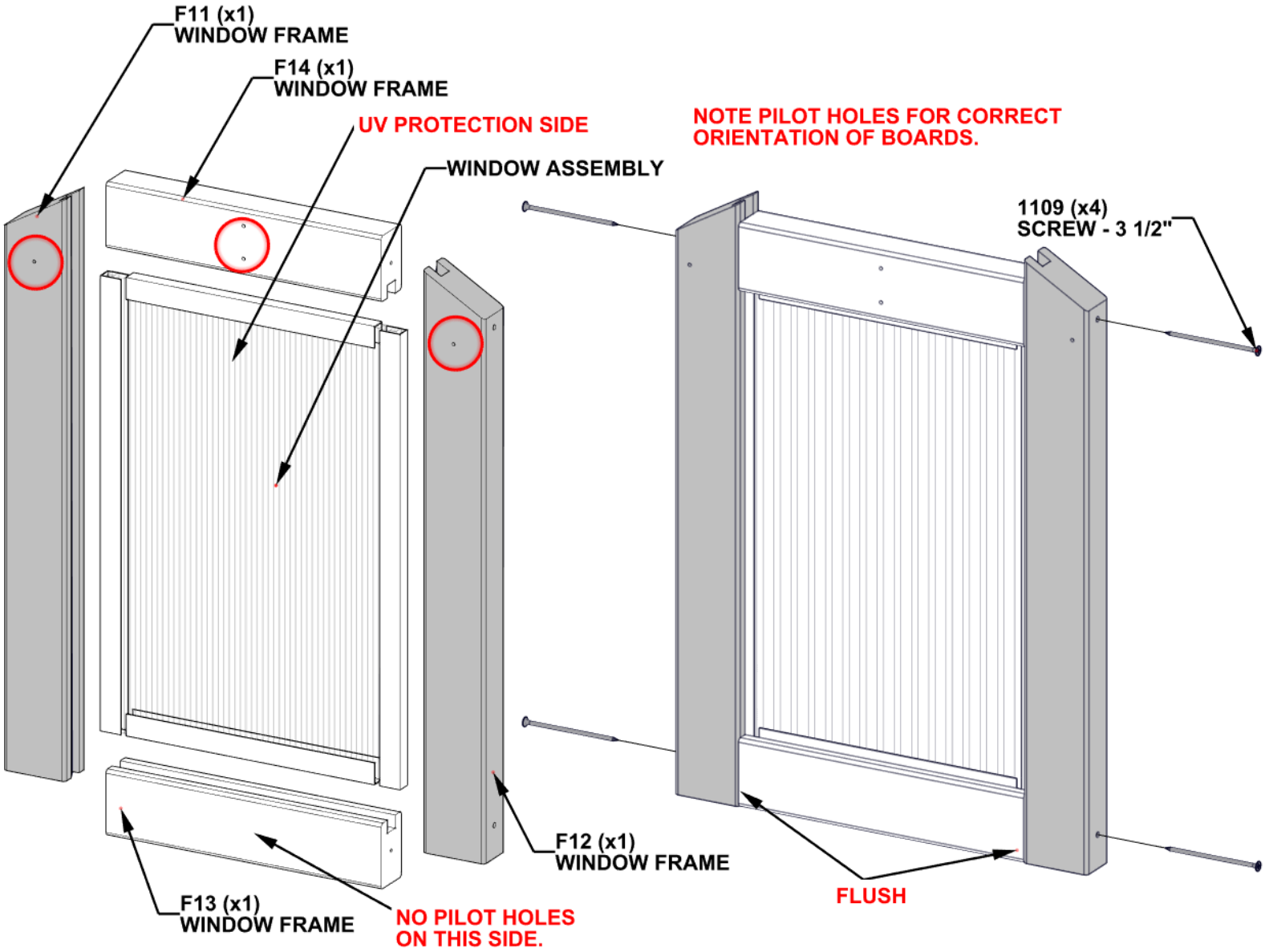

STEP 157 - GABLE ASSEMBLY

QTY	PART NUMBER	DESCRIPTION
16	H100385	SCREW PFH 8x1 BLK

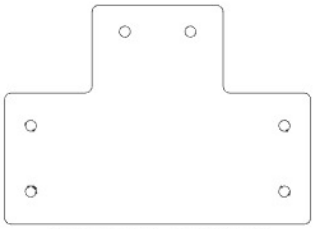

A4M02099 T-CLEAT
(x4)

- USE PILOT HOLES IN WINDOW ASSEMBLY TO ATTACH T-CLEATS.

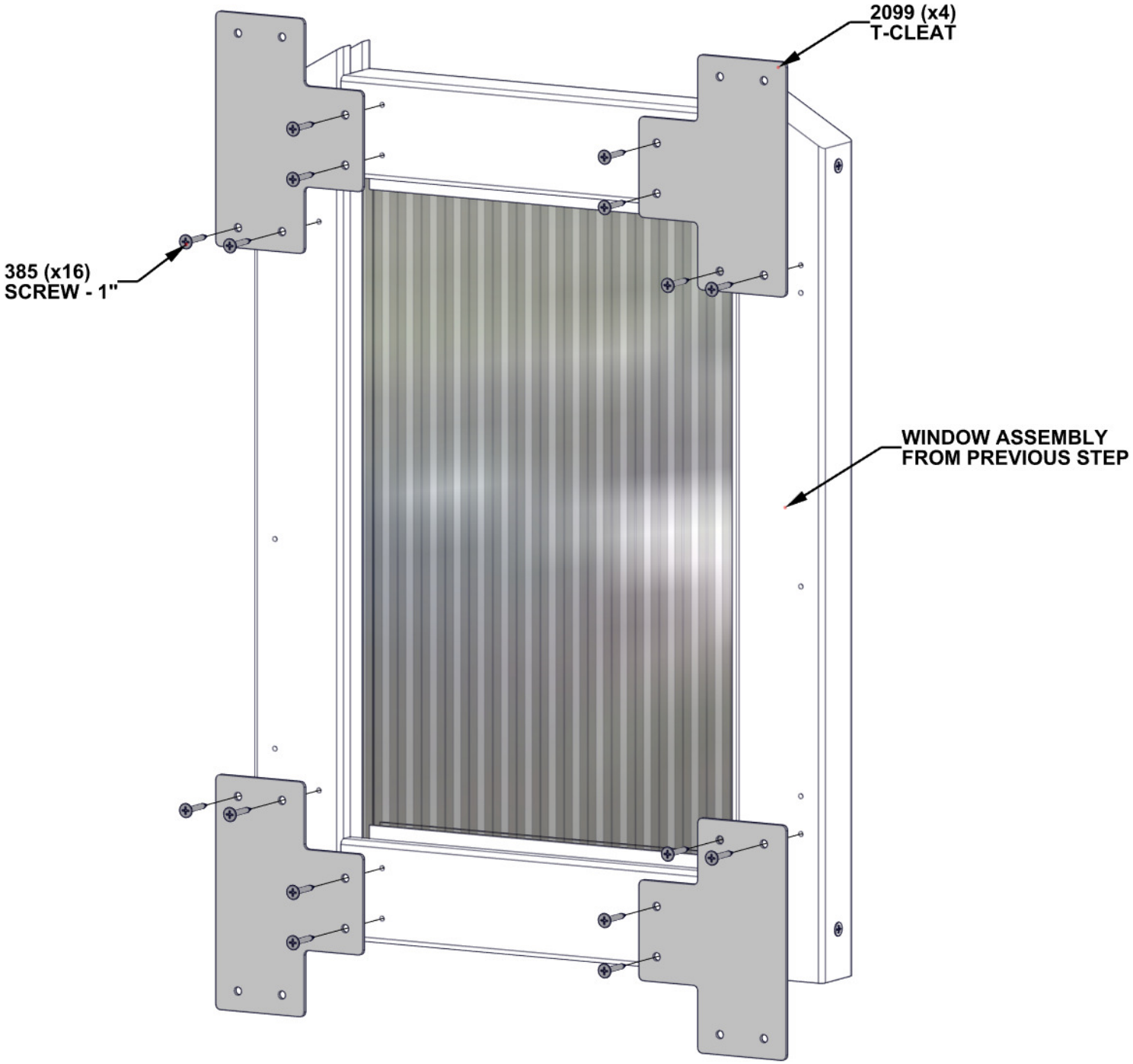

STEP 158 - GABLE ASSEMBLY

QTY	PART NUMBER	DESCRIPTION
8	H100385	SCREW PFH 8x1 BLK

- ALIGN PILOT HOLES IN HEADER WITH BOTTOM CLEAT HOLES.
- CENTER TOP OF FAN FRAME BETWEEN RAFTERS.
- USE TOP CLEAT HOLES AS A GUIDE TO DRILL PILOT HOLES IN GABLE USING 1/8" [3mm] DRILL BIT.
- ATTACH AS SHOWN

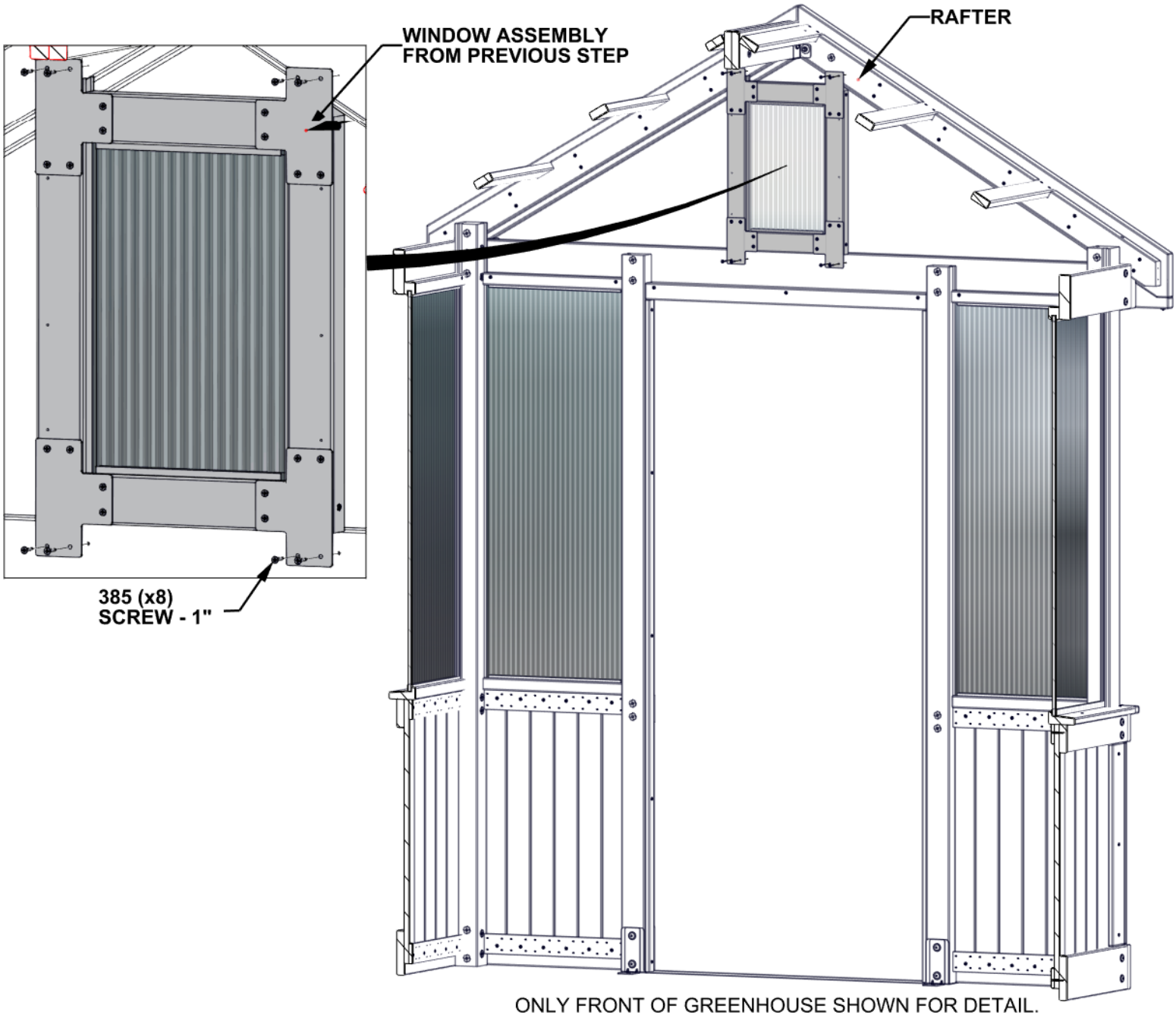

STEP 159 - GABLE ASSEMBLY

QTY	PART NUMBER	DESCRIPTION
4	H100200	SCREW PFH 8x1 1/2 BLK

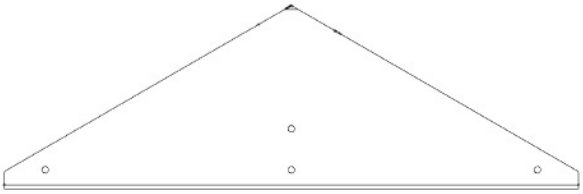

K01 PEAK TRIM - W4L20896
(x1) 5/8"x5 1/4"x16 9/16" (16x134x420)

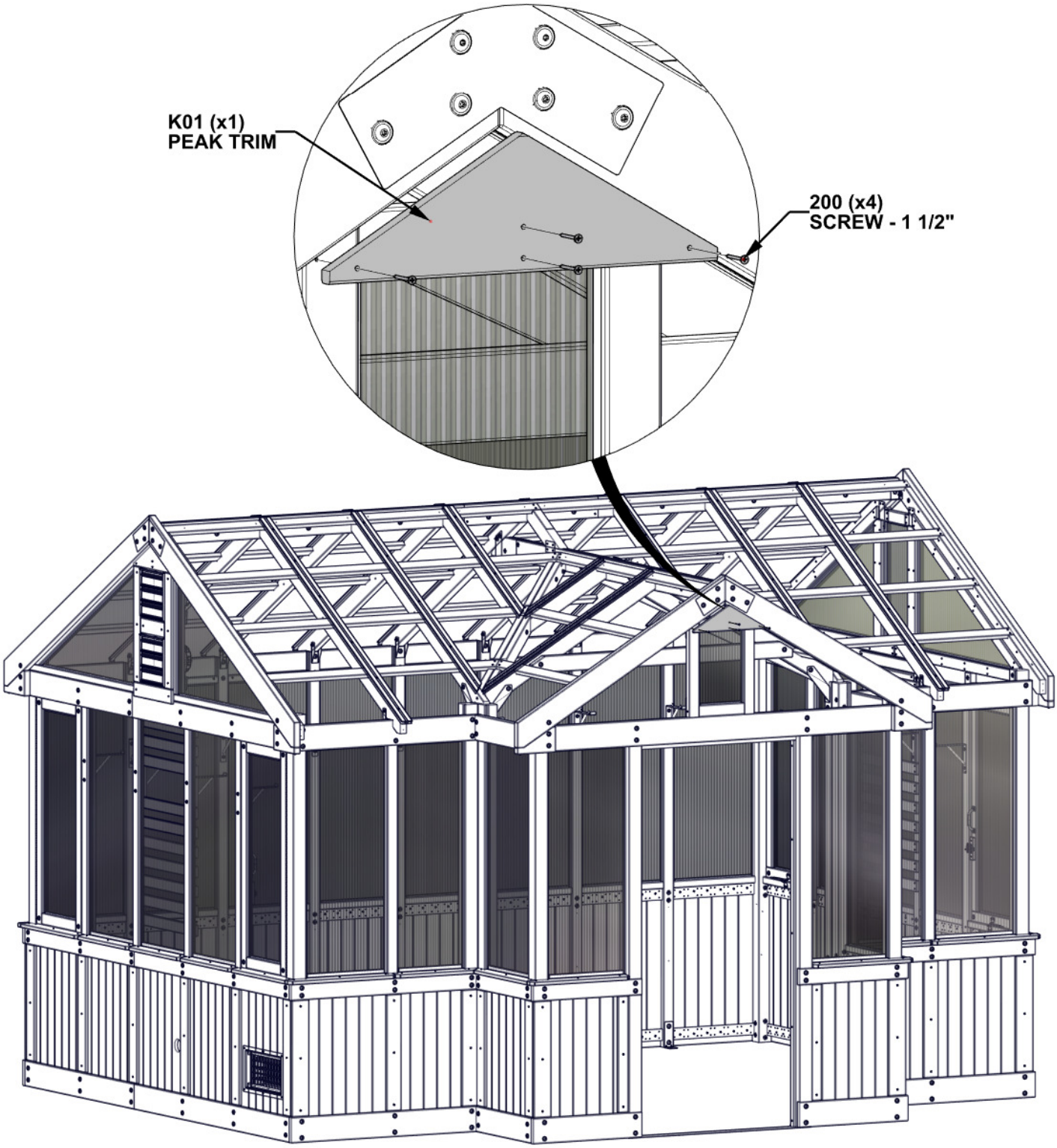

STEP 160 - GABLE ASSEMBLY

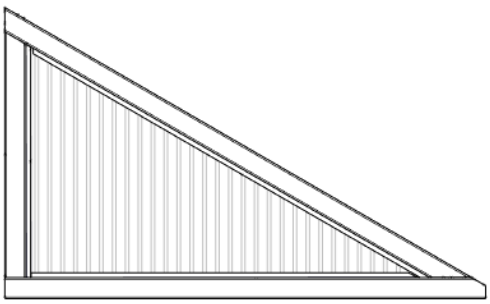

WA06 WINDOW ASSEMBLY - W2A04530
(x1) 1 7/16"x19 9/16"x32 5/16" (36x496x821)

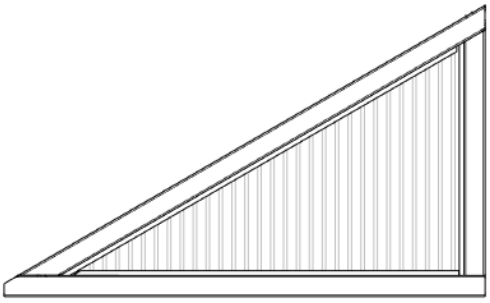

WA07 WINDOW ASSEMBLY - W2A04531
(x1) 1 7/16"x19 9/16"x32 5/16" (36x496x821)

- SLIDE WINDOW ASSEMBLIES INTO OPENINGS UNTIL THEY CONTACT GABLE BOARDS.

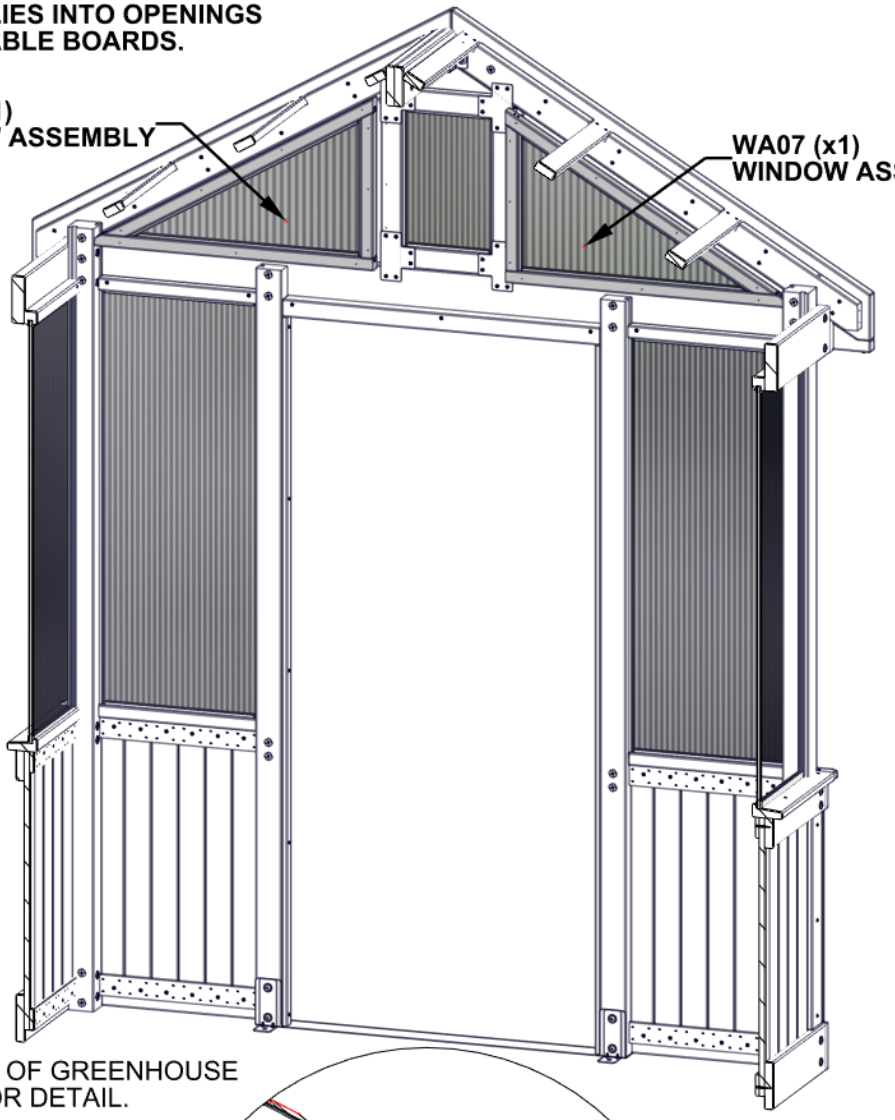

ONLY SIDE OF GREENHOUSE SHOWN FOR DETAIL.

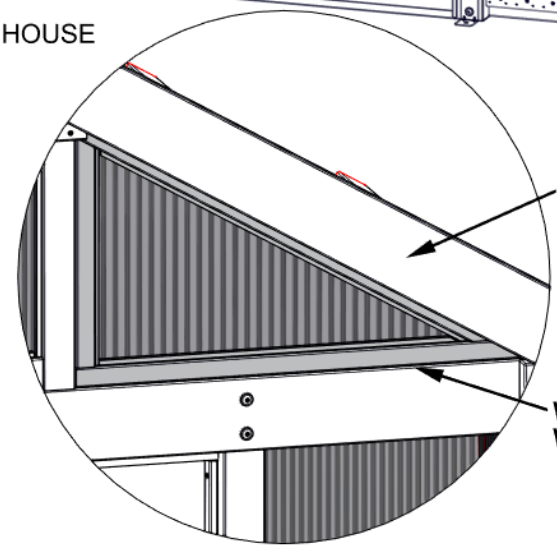

STEP 161 - GABLE ASSEMBLY

QTY	PART NUMBER	DESCRIPTION
40	H100382	SCREW PFH 8x1 3/4 BLK

N08 WINDOW TRIM - W4L21290
(x2) 5/8"x2 3/8"x40 1/16" (16x60x1018)

N09 WINDOW TRIM - W4L21291
(x2) 5/8"x2 3/8"x17 9/16" (16x60x446)

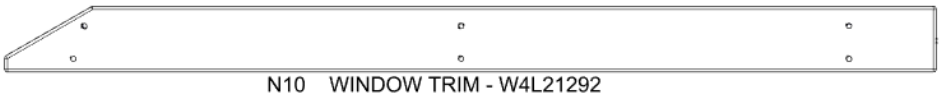

N10 WINDOW TRIM - W4L21292
(x2) 5/8"x2 3/8"x33 1/2" (16x60x851)

- **TWO ADULTS REQUIRED FOR THIS STEP: ONE TO HOLD WINDOW IN PLACE, ONE TO ATTACH TRIM.**
- **INSTALL N09 BOARDS FIRST BY ALIGNING THROUGH HOLES IN BOARD WITH PILOT HOLES IN WINDOW ASSEMBLY.**
- **REMAINING BOARDS BUTT UP AGAINST N09 AND ARE FLUSH ON THE OUTSIDE AS SHOWN.**
- **ALIGN HOLES ON N08 AND N10 WITH PILOT HOLES IN WINDOW AND ATTACH.**
- **USE AN 1/8" [3mm] DRILL BIT WITH N08 AND N10 AS GUIDES TO DRILL PILOT HOLES.**
- **ATTACH WITH REMAINING HARDWARE.**

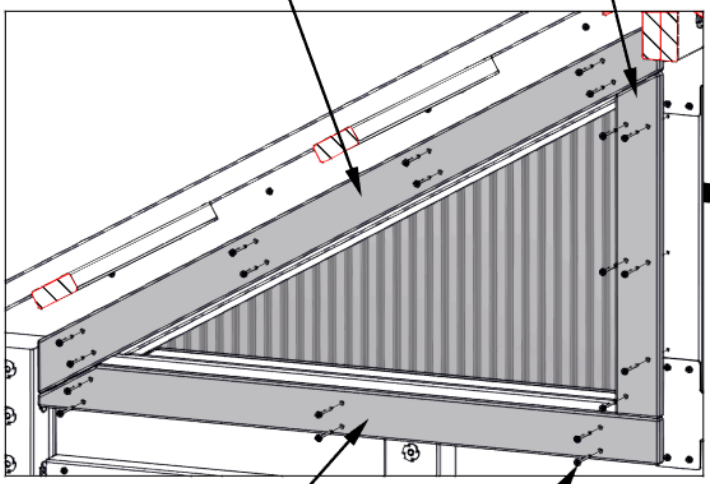

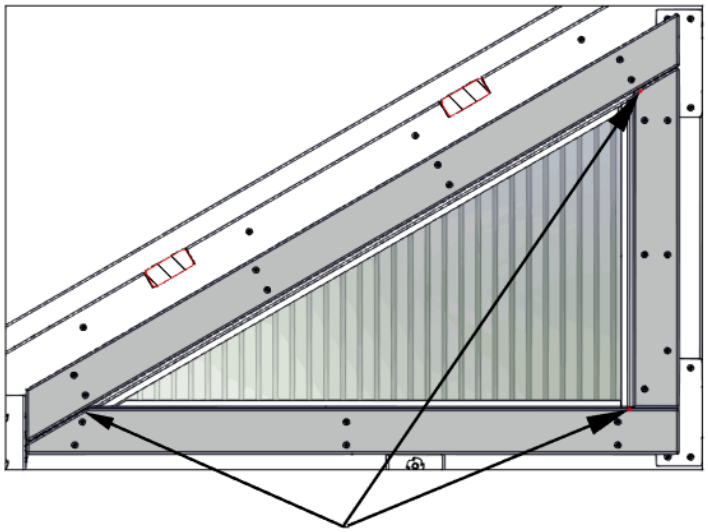

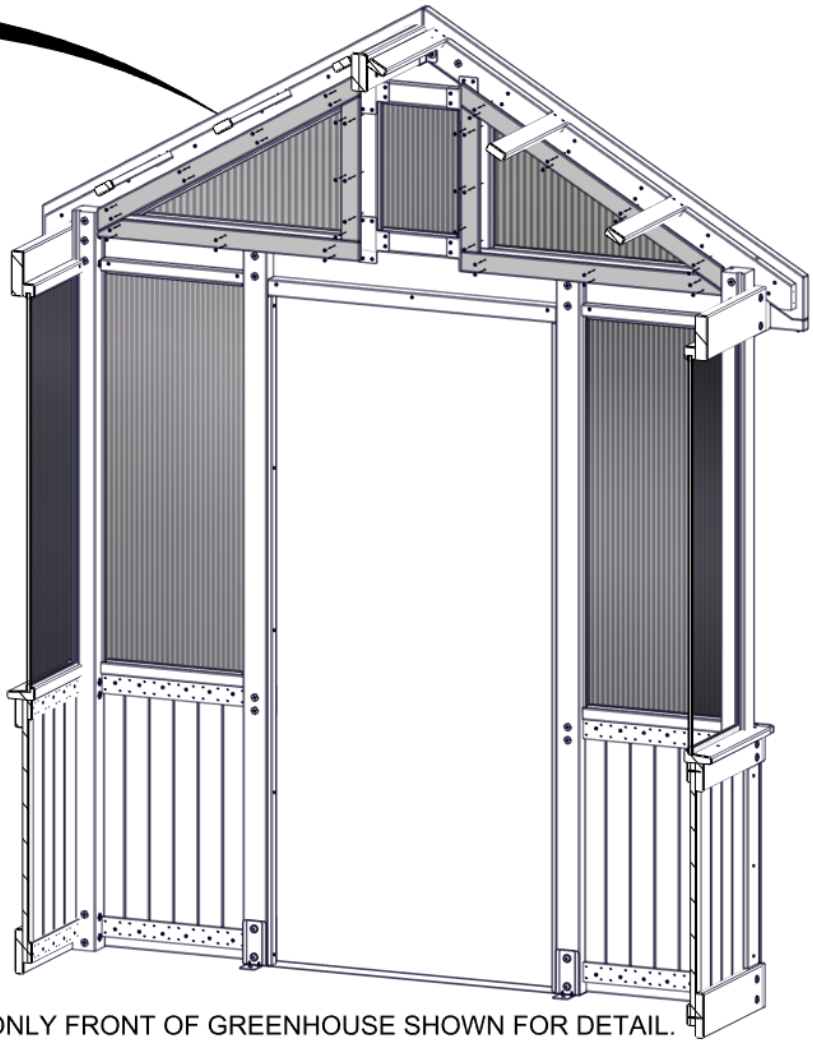

ONLY FRONT OF GREENHOUSE SHOWN FOR DETAIL.

STEP 162 - ROOF ASSEMBLY

QTY	PART NUMBER	DESCRIPTION
12	H100195	BOLT WH 5/16x2 3/4 BLK
12	H100198	WASHER LOCK EXT 8x19
12	H100379	TNUT-5/16" BLK

E27 ACCESSORY TRUSS - W4L21293
(x6) 1 7/16"x3 3/8"x61 1/8" (36x86x1552)

INSERT T-NUTS FIRST.

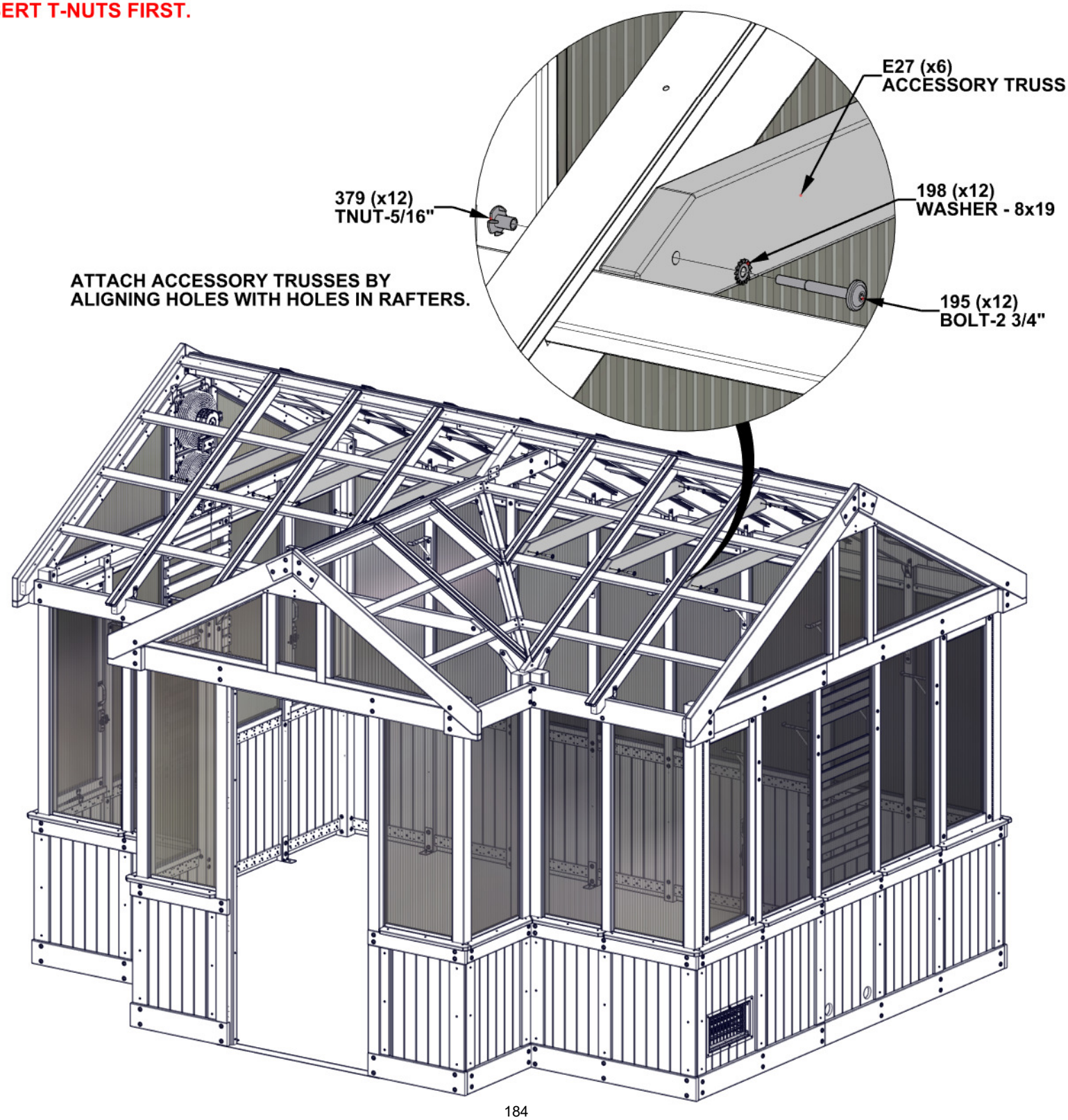

ATTACH ACCESSORY TRUSSES BY ALIGNING HOLES WITH HOLES IN RAFTERS.

STEP 163 - SOFFIT ASSEMBLY

QTY	PART NUMBER	DESCRIPTION
9	H100395	SCREW PFH 8x3/4 BLK

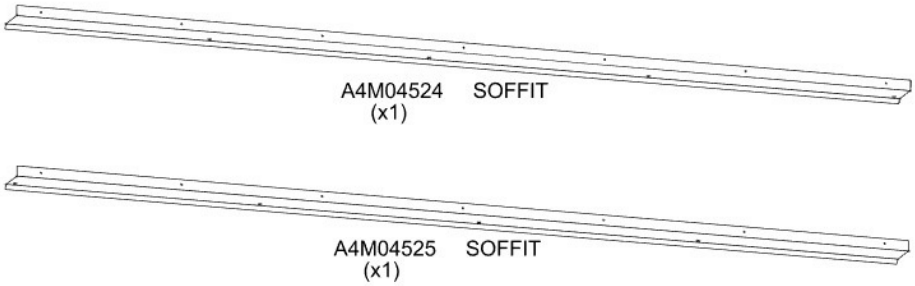

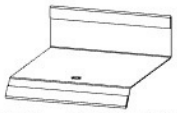

WARNING: GLOVES ARE RECOMMENDED WHEN HANDLING STEEL.

- REMOVE BLUE FILM FROM SOFFIT AND SOFFIT SPLICE.
- 90 DEGREE BEND ON SOFFIT BUTTS UP AGAINST HEADER AS SHOWN.
- SLIDE SOFFIT INTO SOFFIT SPLICE AS SHOWN.
- ENDS OF SOFFIT SHOULD BE FLUSH WITH GABLE END.
- ATTACH WITH SCREWS AS SHOWN.

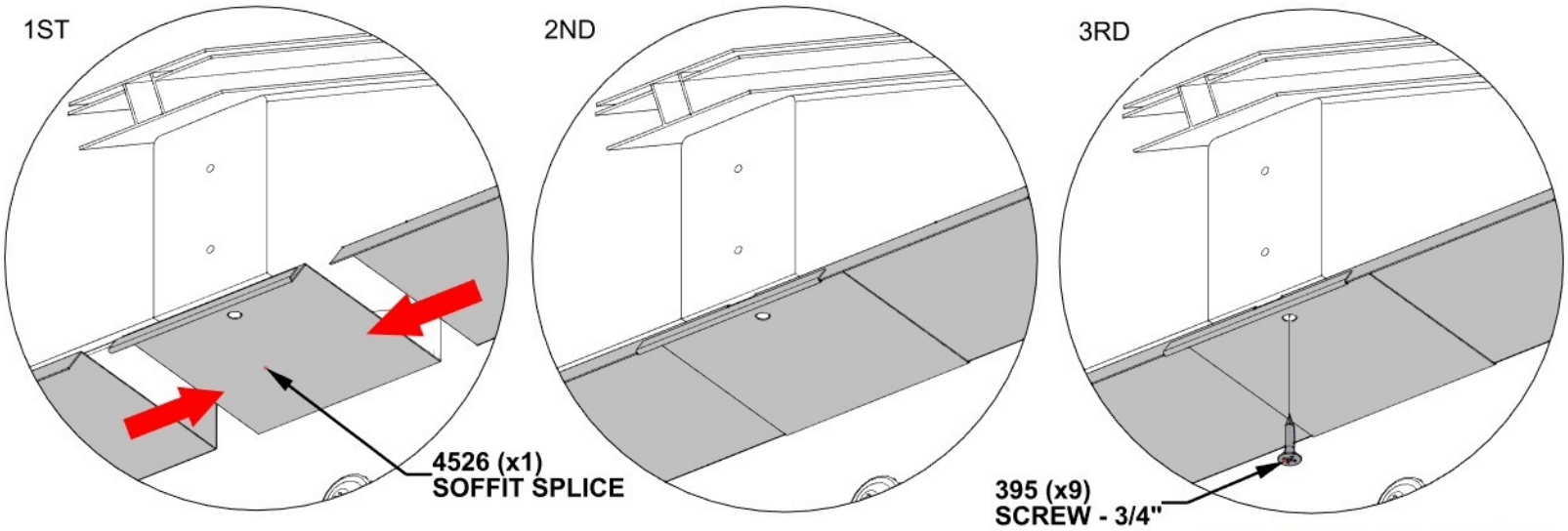

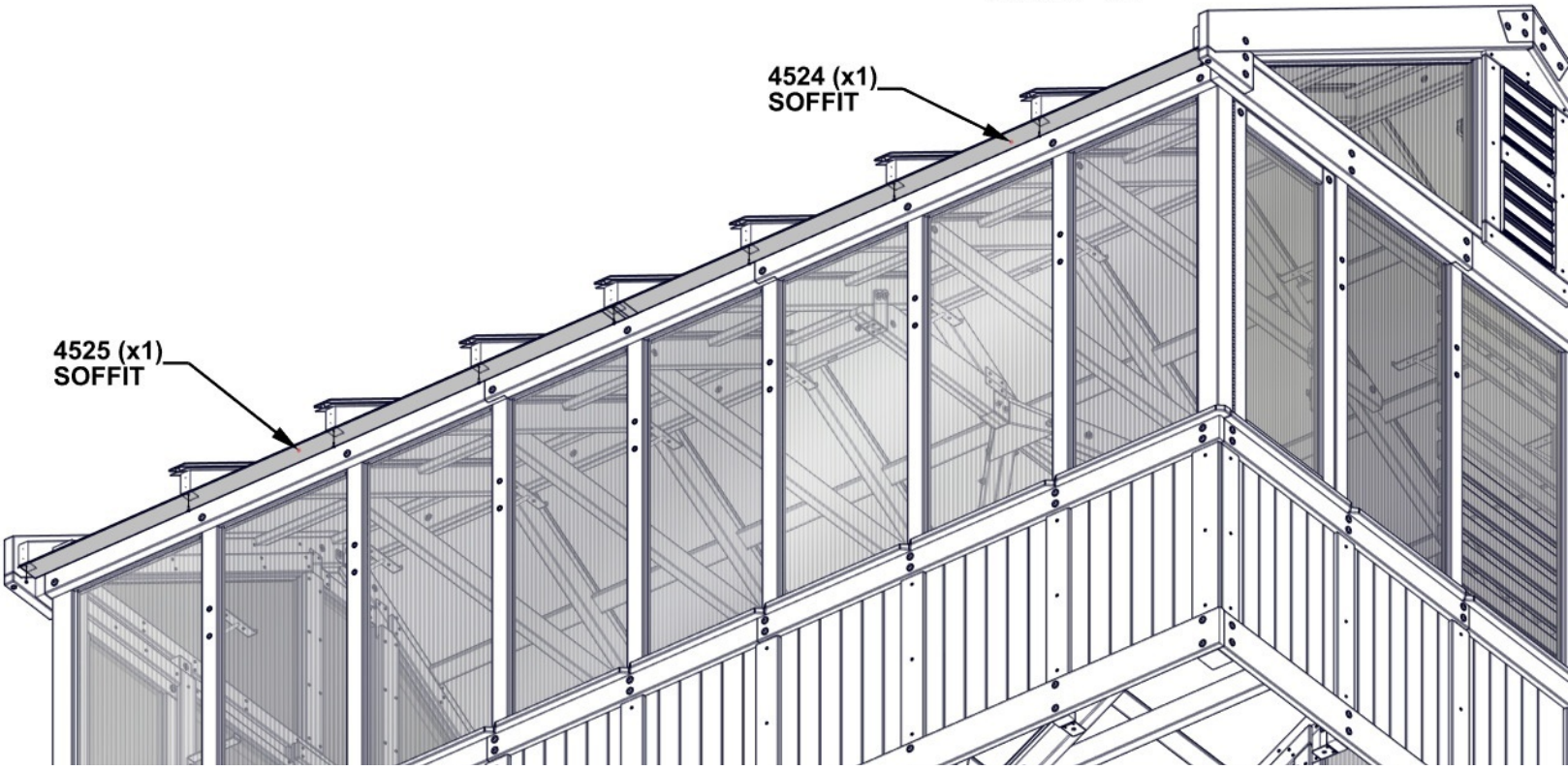

STEP 164 - SOFFIT ASSEMBLY

QTY	PART NUMBER	DESCRIPTION
14	H100395	SCREW PFH 8x3/4 BLK

- ATTACH SOFFIT WITH SCREWS USING THROUGH HOLES IN SOFFIT AS SHOWN.

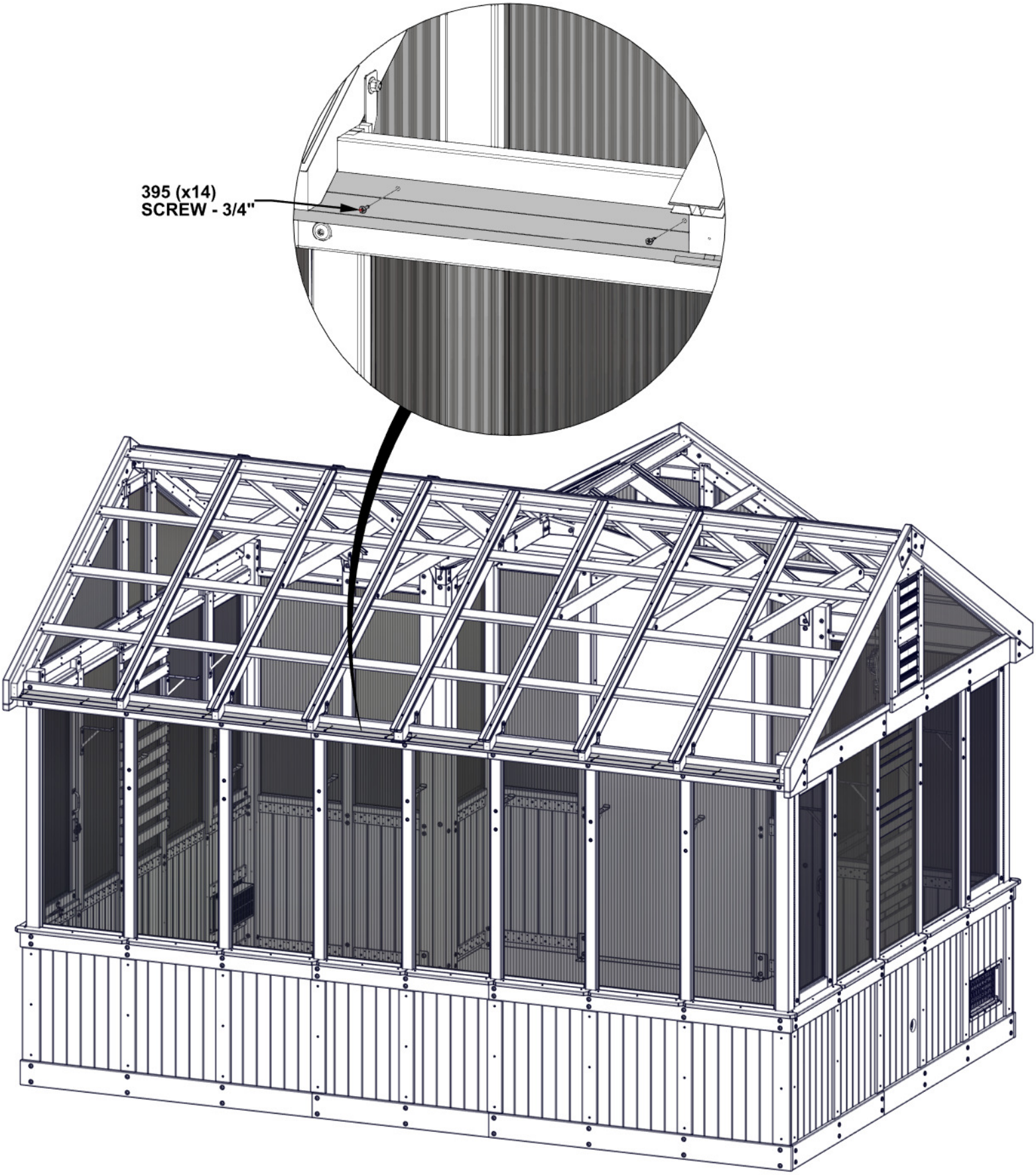

STEP 165 - FASCIA ASSEMBLY

QTY	PART NUMBER	DESCRIPTION
18	H100391	SCREW PFH 8x2 BLK

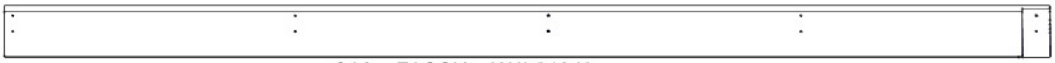

Q08 FASCIA - W4L21249
(x1) 15/16"x4 7/16"x88 7/8" (24x112x2258)

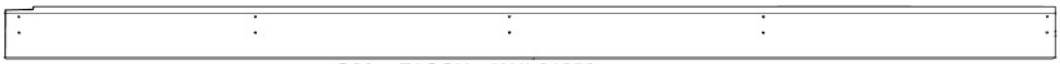

Q09 FASCIA - W4L21250
(x1) 15/16"x4 7/16"x88 7/8" (24x112x2258)

- ALIGN FASCIA BOARDS WITH PILOT HOLES IN RAFTERS AND ATTACH AS SHOWN.

STEP 166 - SOFFIT ASSEMBLY

QTY	PART NUMBER	DESCRIPTION
7	H100395	SCREW PFH 8x3/4 BLK

WARNING: GLOVES ARE RECOMMENDED WHEN HANDLING STEEL.

- **REMOVE BLUE FILM FROM SOFFIT AND SOFFIT SPLICE.**
- **90 DEGREE BEND ON SOFFIT BUTTS UP AGAINST HEADER AS SHOWN.**
- **END OF SOFFIT SHOULD BE FLUSH WITH GABLE END.**
- **ATTACH WITH SCREWS FROM BOTTOM INTO RAFTERS BEFORE INSERTING OTHER SCREWS.**

ENSURE OPPOSITE END OF SOFFIT IS 1 1/2" BELOW THE TOP OF HEADER AS SHOWN.

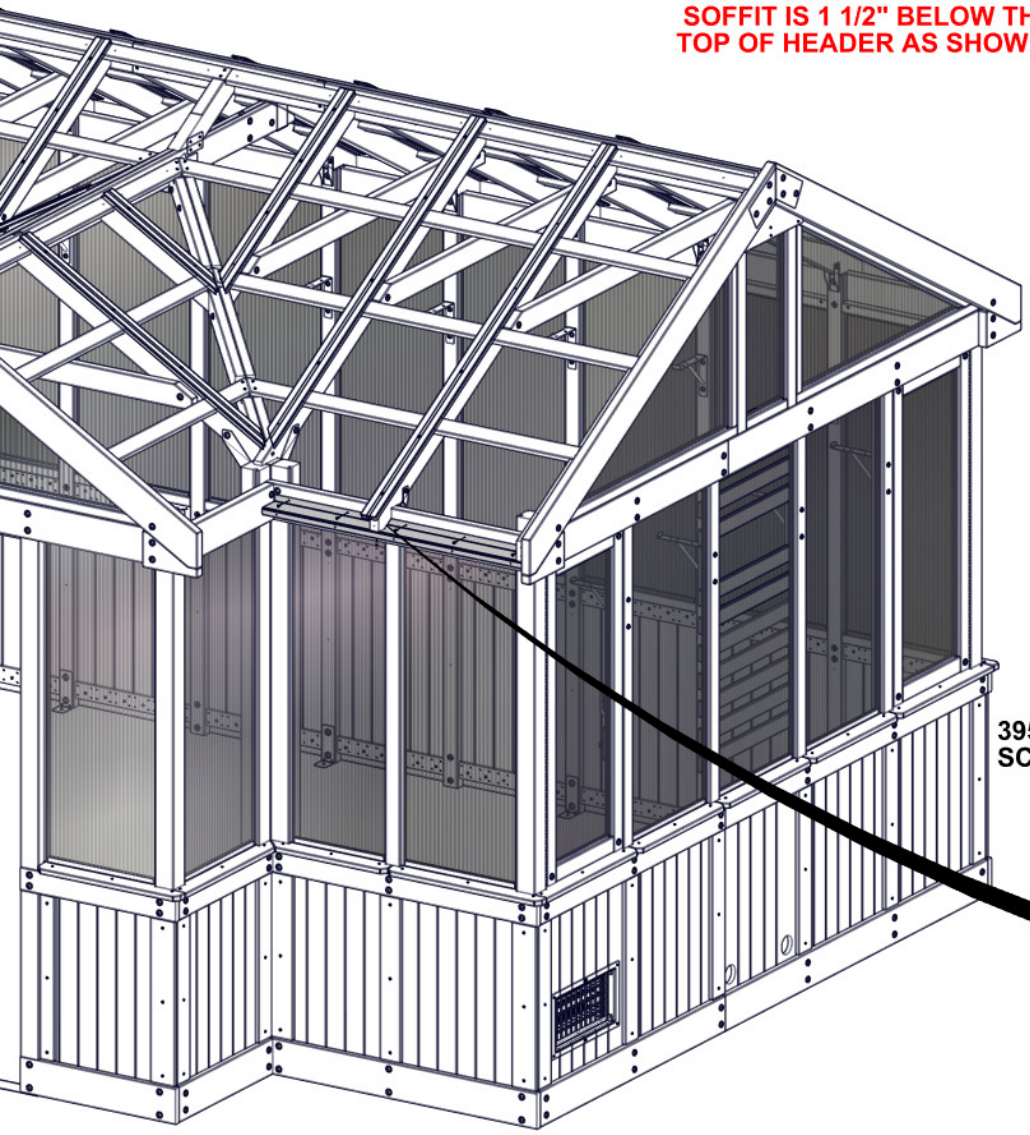

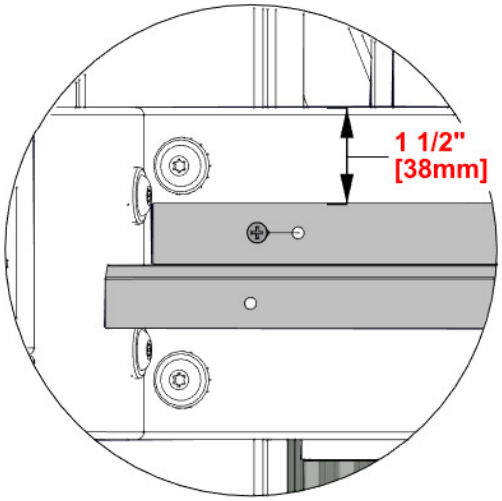

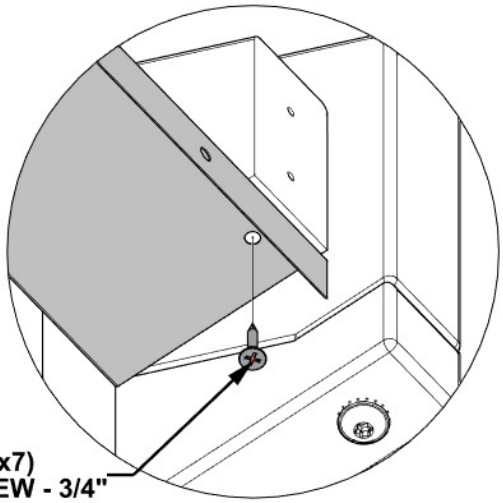

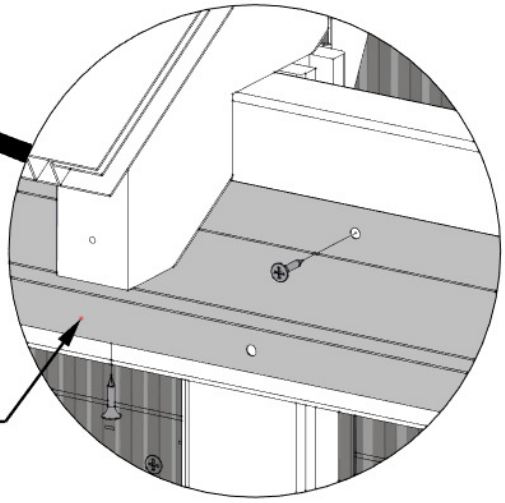

STEP 167 - SOFFIT ASSEMBLY

QTY	PART NUMBER	DESCRIPTION
4	H100395	SCREW PFH 8x3/4 BLK

WARNING: GLOVES ARE RECOMMENDED WHEN HANDLING STEEL.

- **REMOVE BLUE FILM FROM SOFFIT AND SOFFIT SPLICE.**
- **90 DEGREE BEND ON SOFFIT BUTTS UP AGAINST HEADER AS SHOWN.**
- **END OF SOFFIT SHOULD BE FLUSH WITH GABLE END.**
- **ATTACH WITH SCREW FROM BOTTOM INTO RAFTER BEFORE INSERTING OTHER SCREWS.**

ENSURE OPPOSITE END OF SOFFIT IS 1 1/2" BELOW THE TOP OF HEADER AS SHOWN.

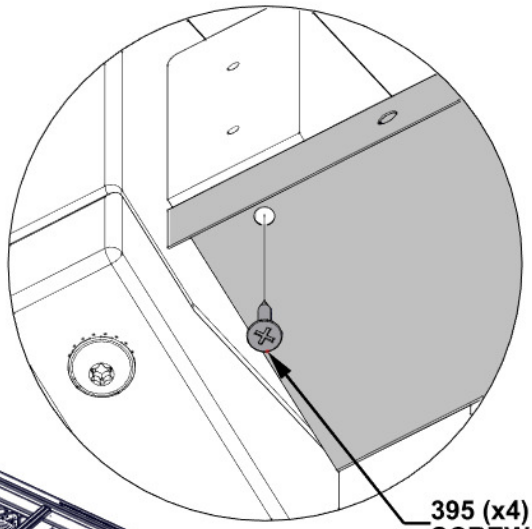

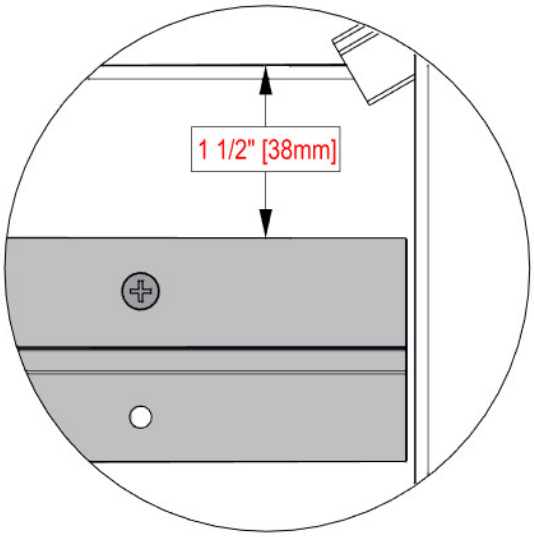

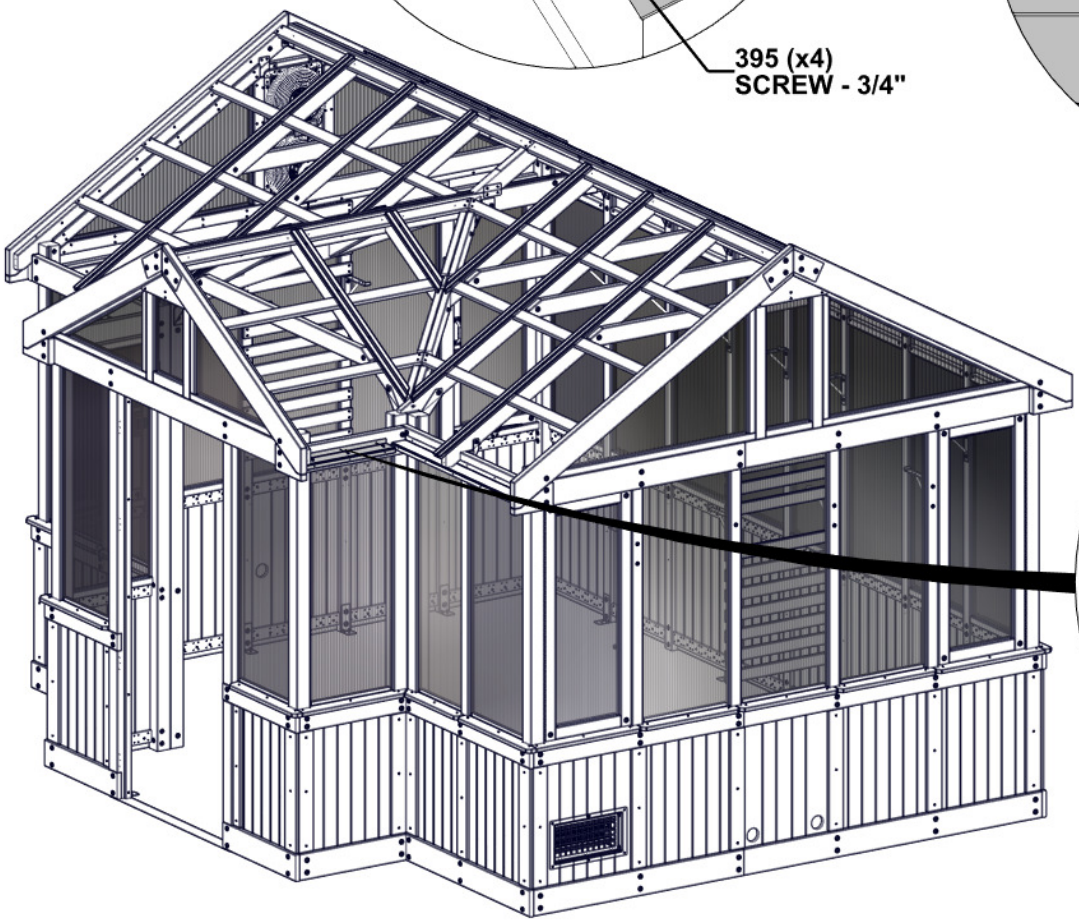

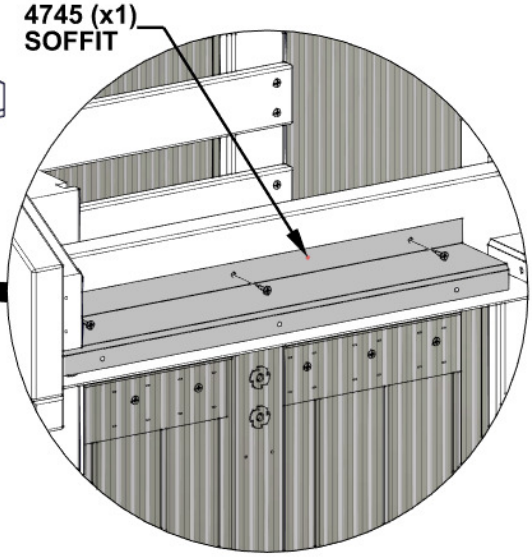

STEP 168 - FASCIA ASSEMBLY

QTY	PART NUMBER	DESCRIPTION
2	H101030	SCREW CONFIRMAT 7x2 BLK

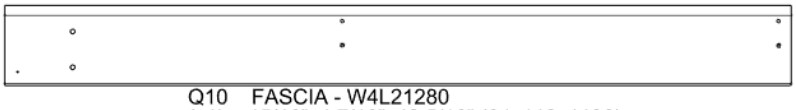

Q10 FASCIA - W4L21280
(x1) 15/16"x4 7/16"x43 5/16" (24x112x1100)

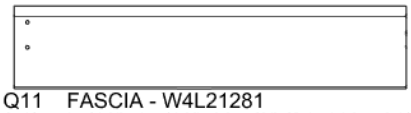

Q11 FASCIA - W4L21281
(x1) 15/16"x4 7/16"x20 7/8" (24x112x531)

- ALIGN PILOT HOLES IN Q11 WITH THROUGH HOLES IN Q10 AND ATTACH AS SHOWN.
- NOTE ANGLE CUTS AND THROUGH HOLES FOR CORRECT ORIENTATION.

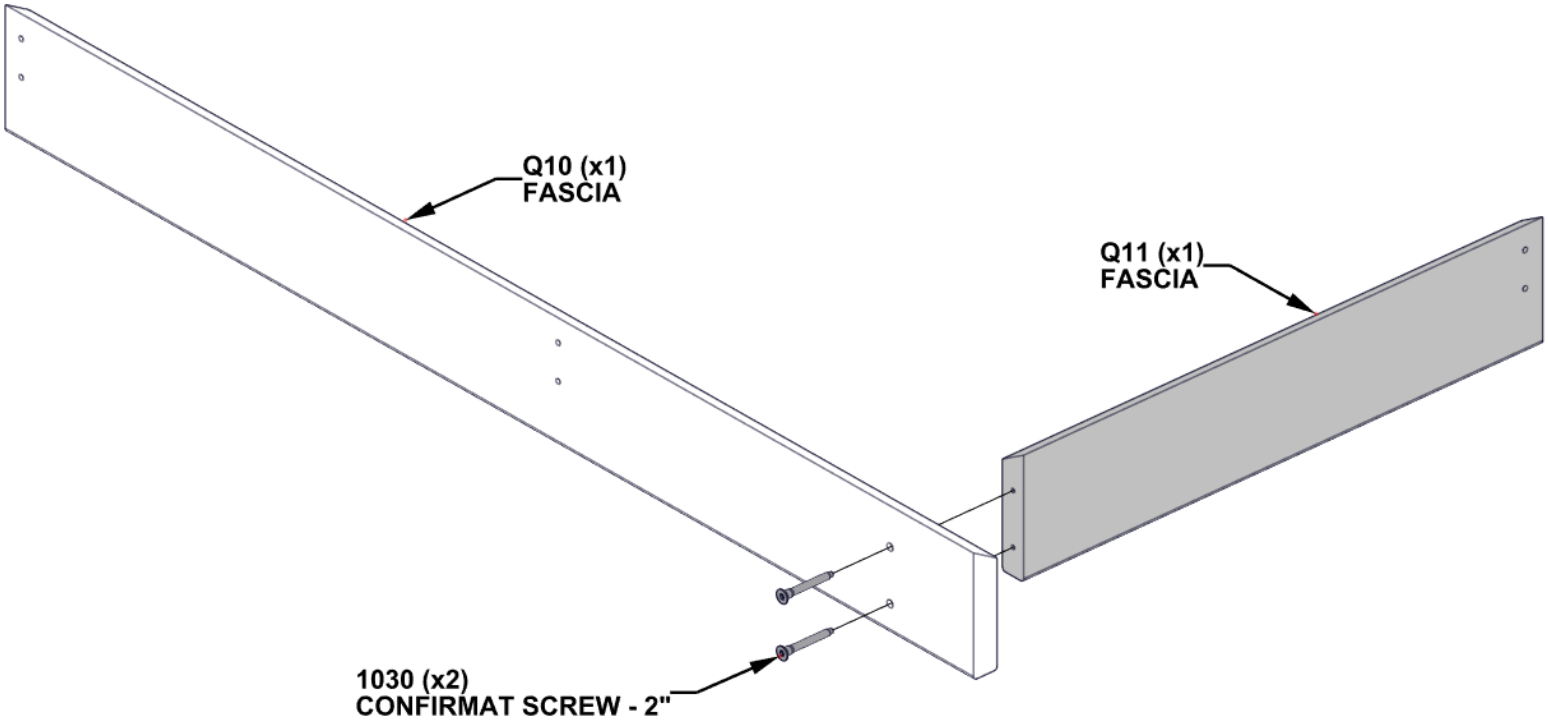

STEP 169 - FASCIA ASSEMBLY

QTY	PART NUMBER	DESCRIPTION
6	H100391	SCREW PFH 8x2 BLK

- ALIGN THROUGH HOLES IN FASCIA ASSEMBLY WITH PILOT HOLES IN ENDS OF RAFTERS AND ATTACH AS SHOWN.

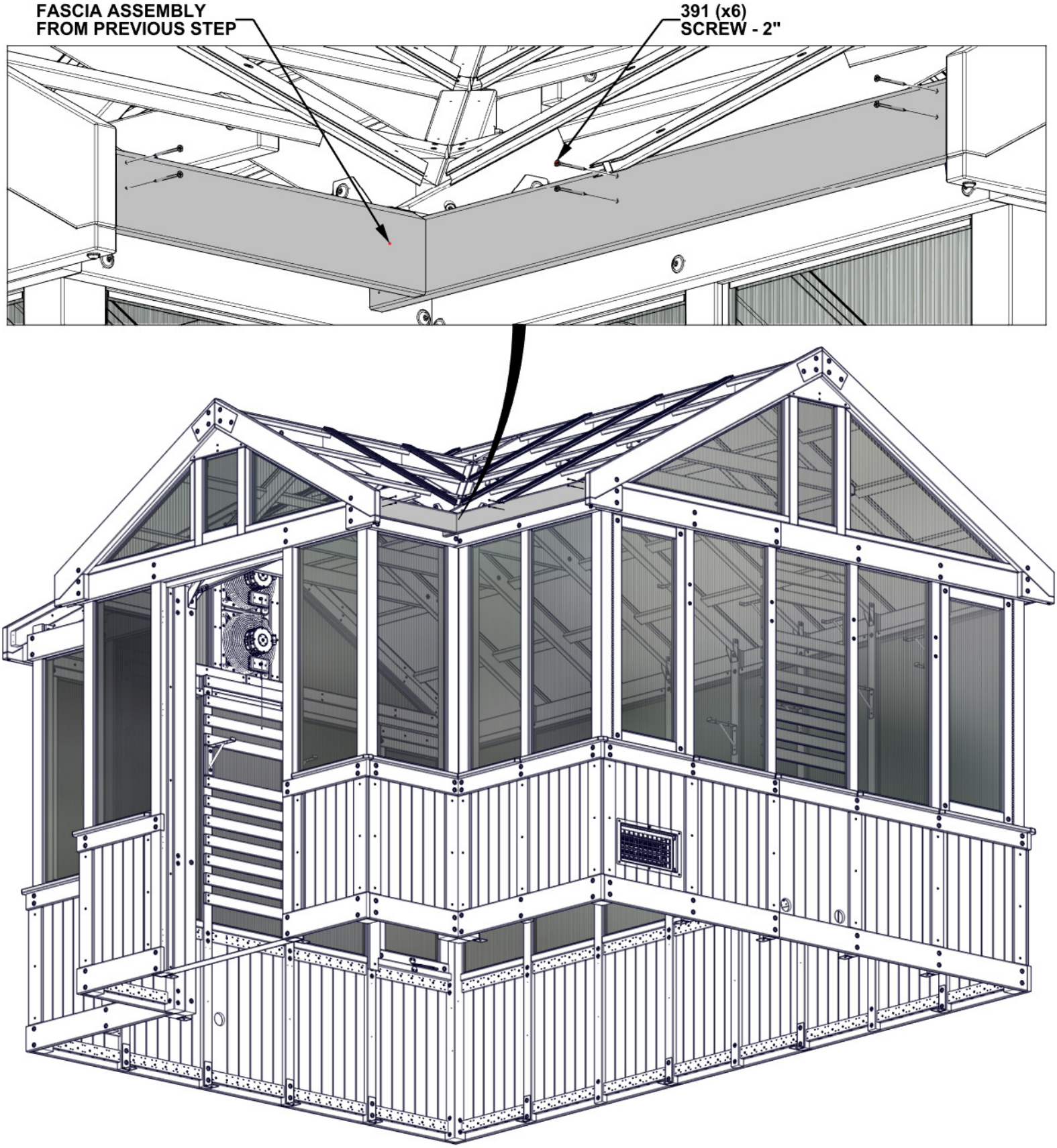

STEP 170 - SOFFIT ASSEMBLY

QTY	PART NUMBER	DESCRIPTION
8	H100395	SCREW PFH 8x3/4 BLK

- INSERT SCREWS INTO BACK SIDE OF FASCIA USING PILOT HOLES IN SOFFIT

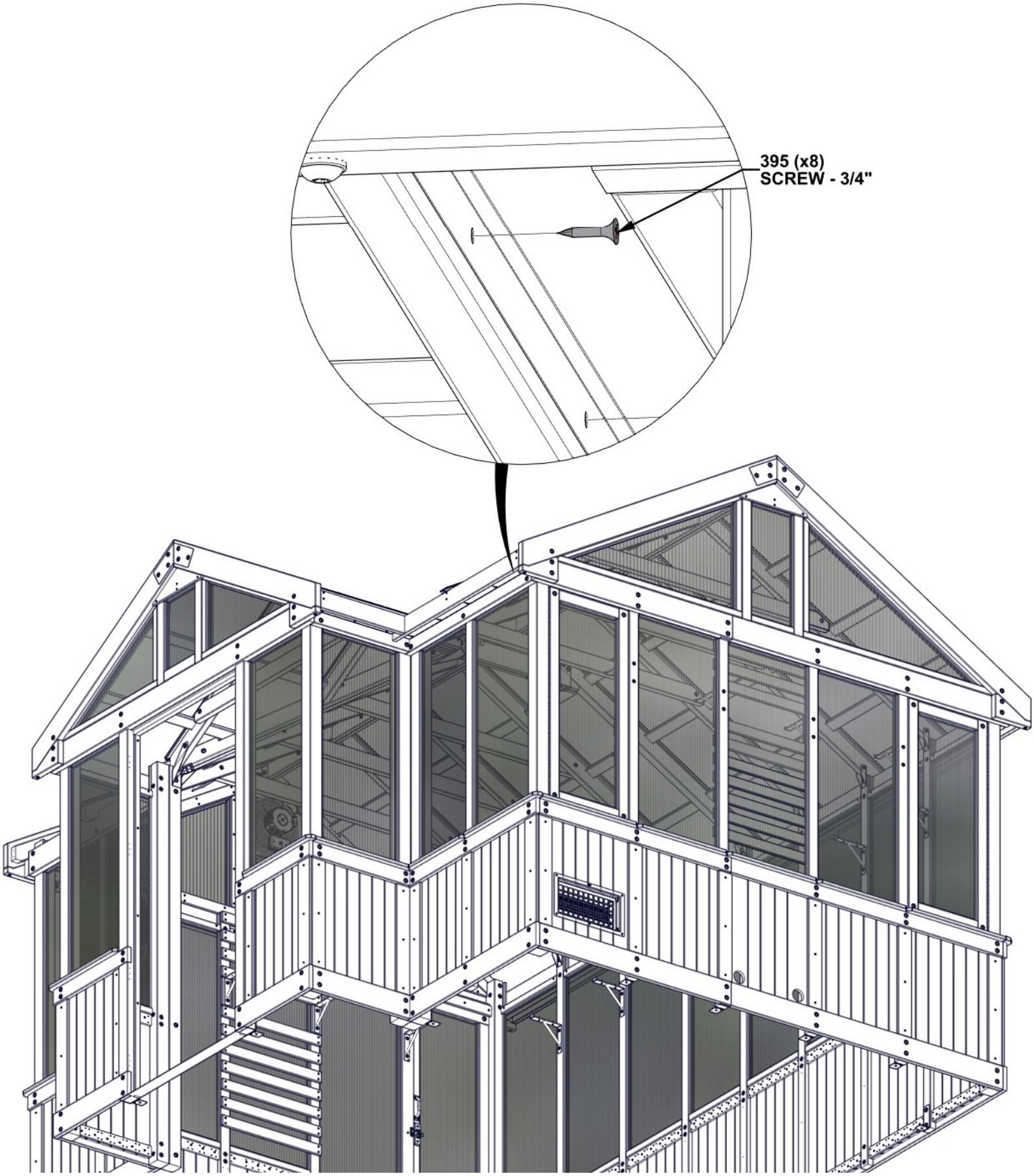

STEP 171 - FASCIA ASSEMBLY

QTY	PART NUMBER	DESCRIPTION
2	H101069	SCREW PWH 8x7/8 BLK

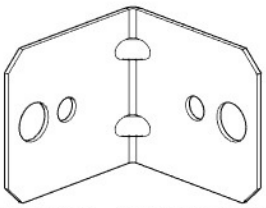

A4M00555 L BRACKET BLK
(x1)

- ATTACH BRACKET USING PILOT HOLE IN FASCIA, THEN INSERT OTHER SCREW INTO HEADER AS SHOWN.

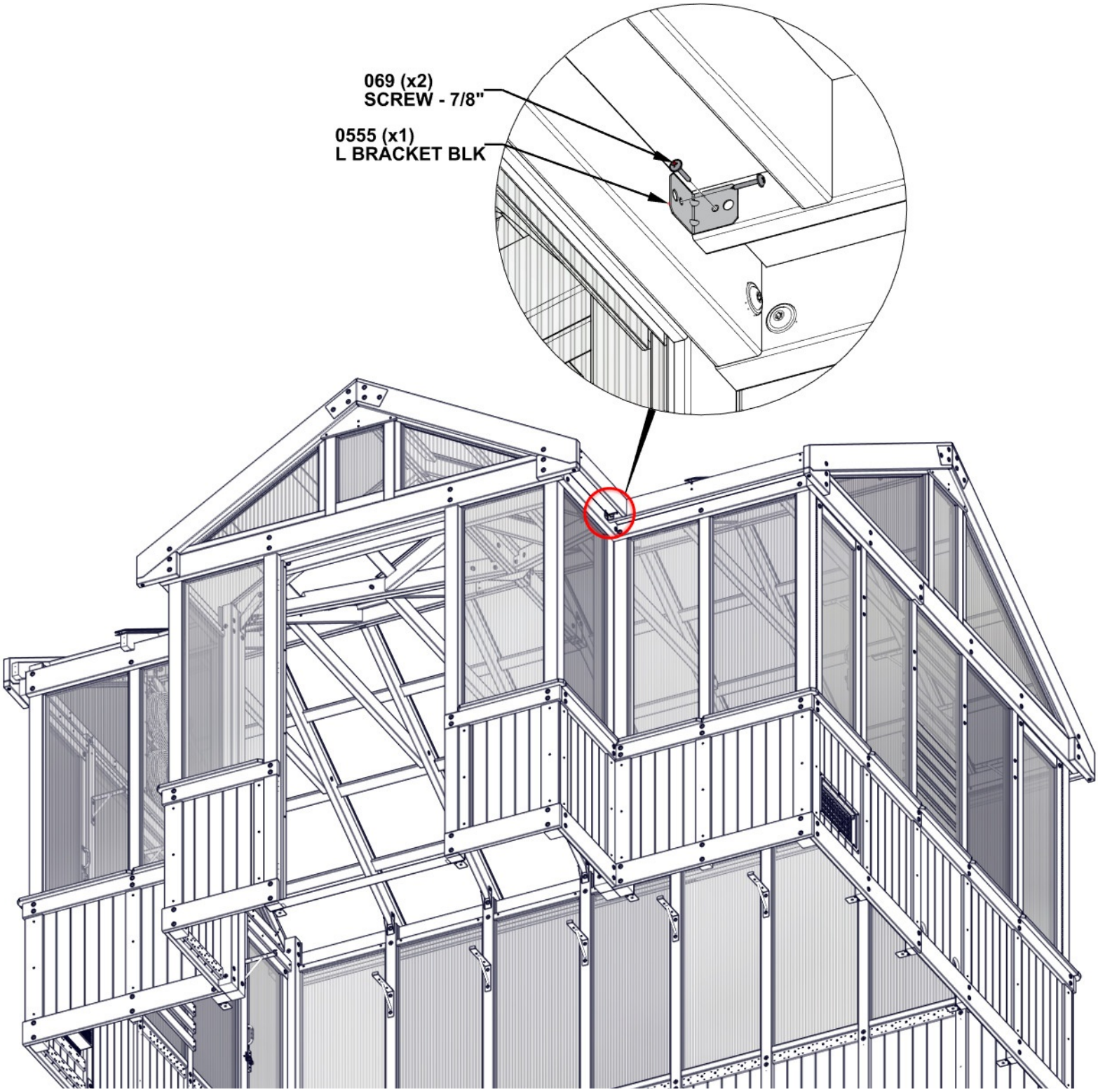

STEP 172 - SOFFIT ASSEMBLY

QTY	PART NUMBER	DESCRIPTION
7	H100395	SCREW PFH 8x3/4 BLK

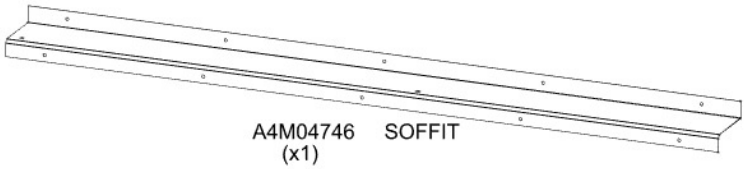

WARNING: GLOVES ARE RECOMMENDED WHEN HANDLING STEEL.

- REMOVE BLUE FILM FROM SOFFIT AND SOFFIT SPLICE.

- 90 DEGREE BEND ON SOFFIT BUTTS UP AGAINST HEADER AS SHOWN.
- END OF SOFFIT SHOULD BE FLUSH WITH GABLE END.
- ATTACH WITH SCREWS FROM BOTTOM INTO RAFTERS BEFORE INSERTING OTHER SCREWS.

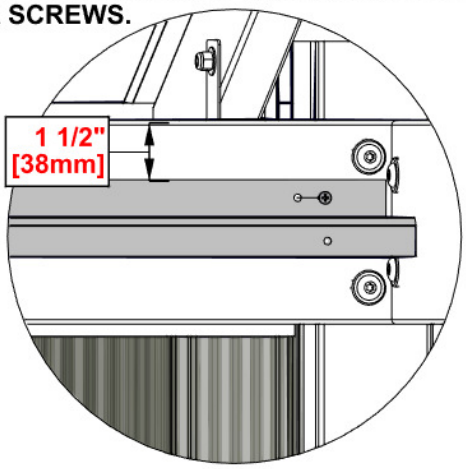

ENSURE OPPOSITE END OF SOFFIT IS 1 1/2" BELOW THE TOP OF HEADER AS SHOWN.

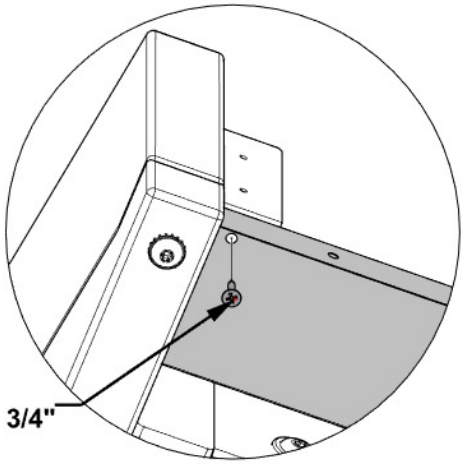

395 (x7)
SCREW - 3/4"

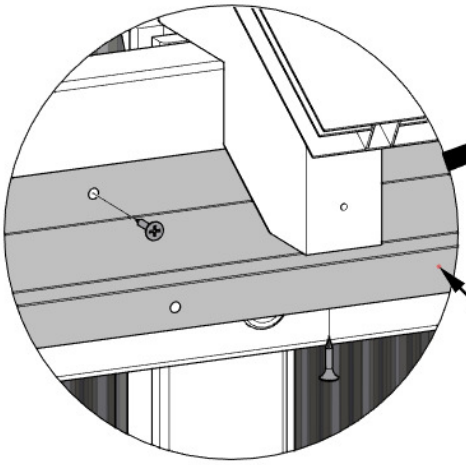

4746 (x1)
SOFFIT

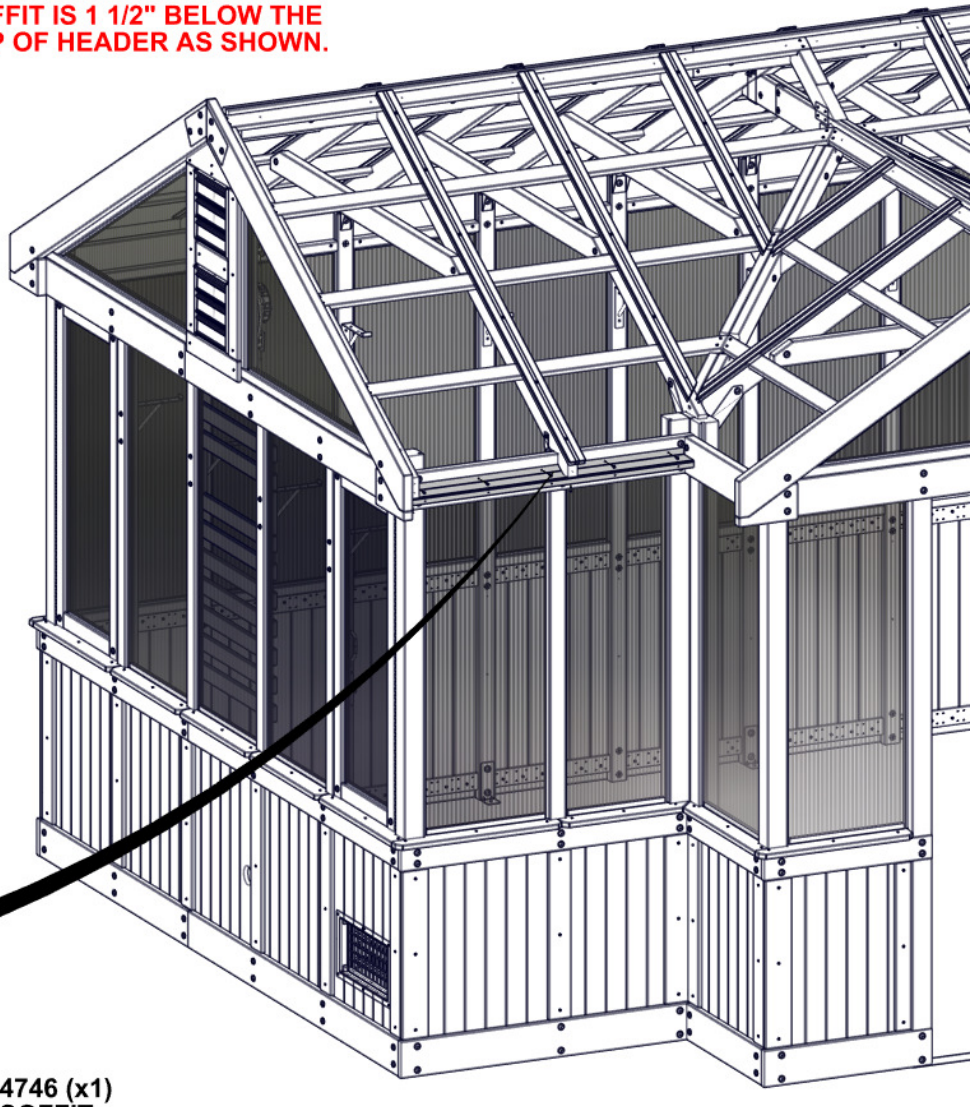

STEP 173 - SOFFIT ASSEMBLY

QTY	PART NUMBER	DESCRIPTION
4	H100395	SCREW PFH 8x3/4 BLK

A4M04744 SOFFIT
(x1)

WARNING: GLOVES ARE RECOMMENDED WHEN HANDLING STEEL.

- **REMOVE BLUE FILM FROM SOFFIT AND SOFFIT SPLICE.**
- **90 DEGREE BEND ON SOFFIT BUTTS UP AGAINST HEADER AS SHOWN.**
- **END OF SOFFIT SHOULD BE FLUSH WITH GABLE END.**
- **ATTACH WITH SCREW FROM BOTTOM INTO RAFTER BEFORE INSERTING OTHER SCREWS.**

ENSURE OPPOSITE END OF SOFFIT IS 1 1/2" BELOW THE TOP OF HEADER AS SHOWN.

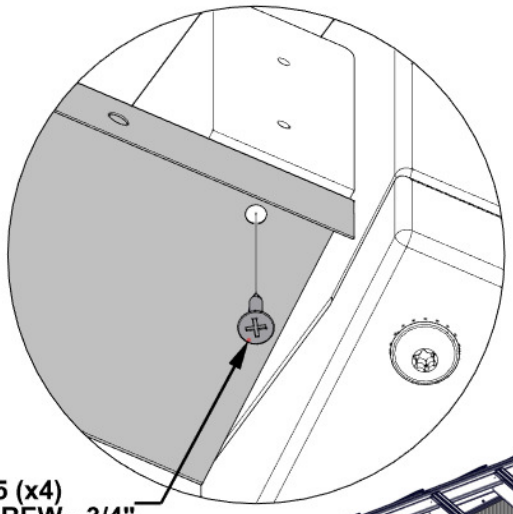

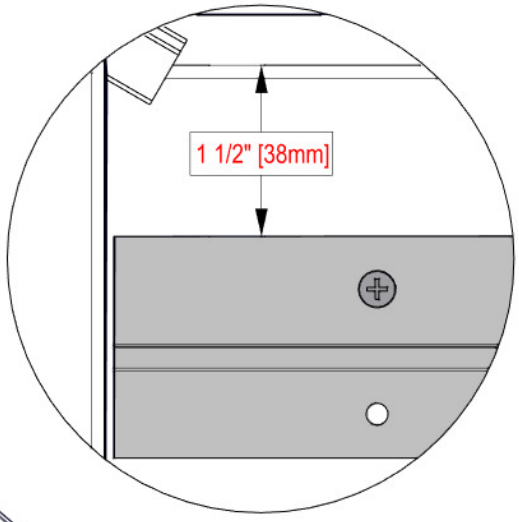

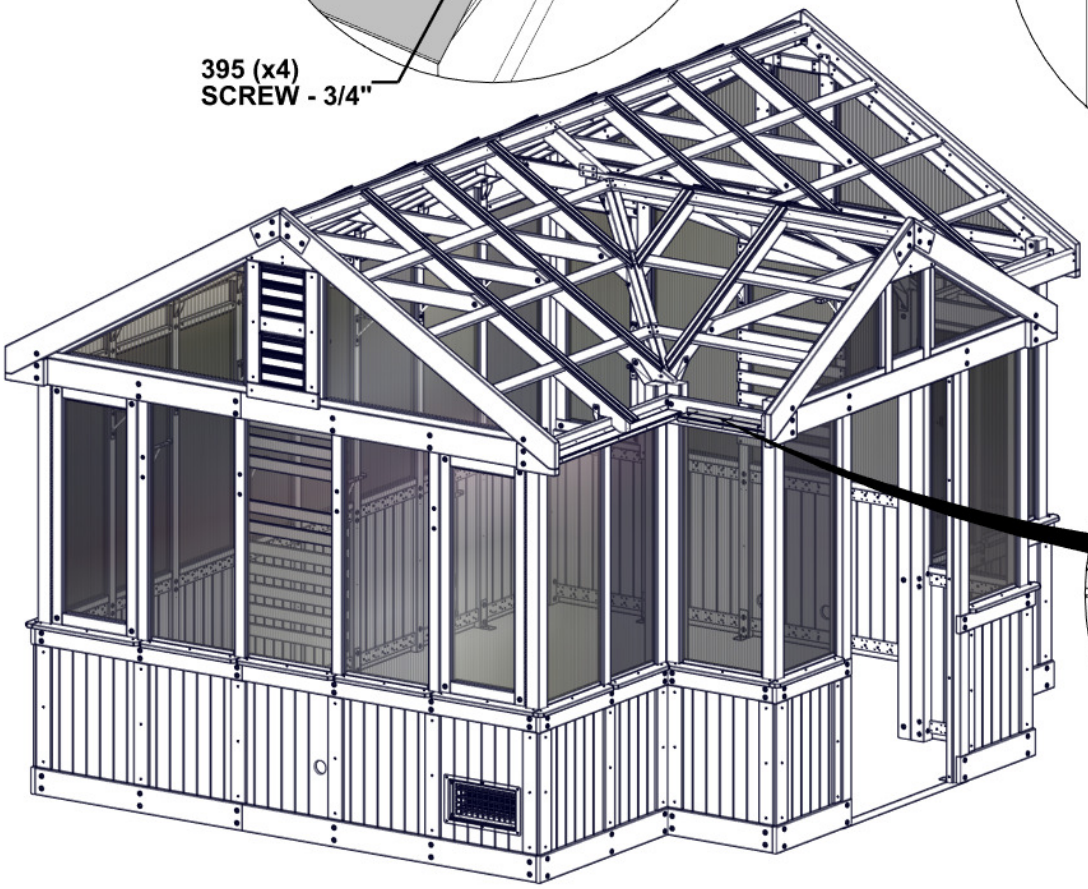

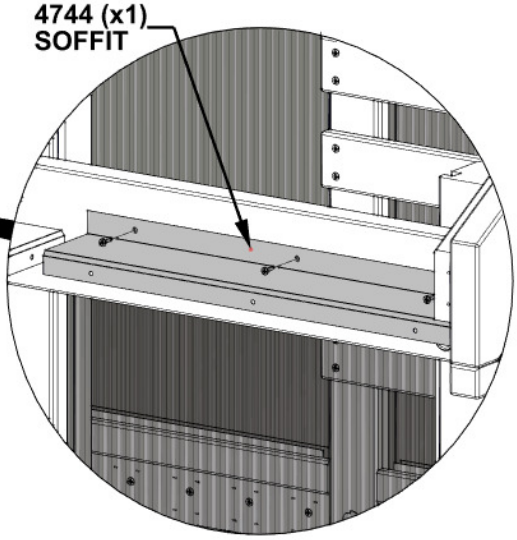

STEP 174 - FASCIA ASSEMBLY

QTY	PART NUMBER	DESCRIPTION
2	H101030	SCREW CONFIRMAT 7x2 BLK

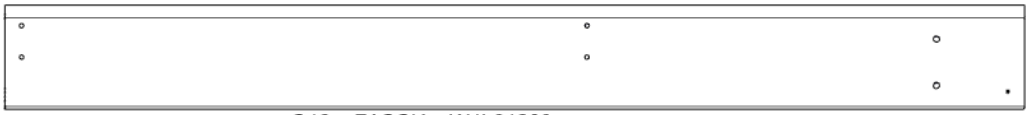

Q12 FASCIA - W4L21282
(x1) 15/16"x4 7/16"x43 5/16" (24x112x1100)

Q13 FASCIA - W4L21283
(x1) 15/16"x4 7/16"x20 7/8" (24x112x531)

- ALIGN PILOT HOLES IN Q13 WITH THROUGH HOLES IN Q12 AND ATTACH AS SHOWN.
- NOTE ANGLE CUTS AND THROUGH HOLES FOR CORRECT ORIENTATION.

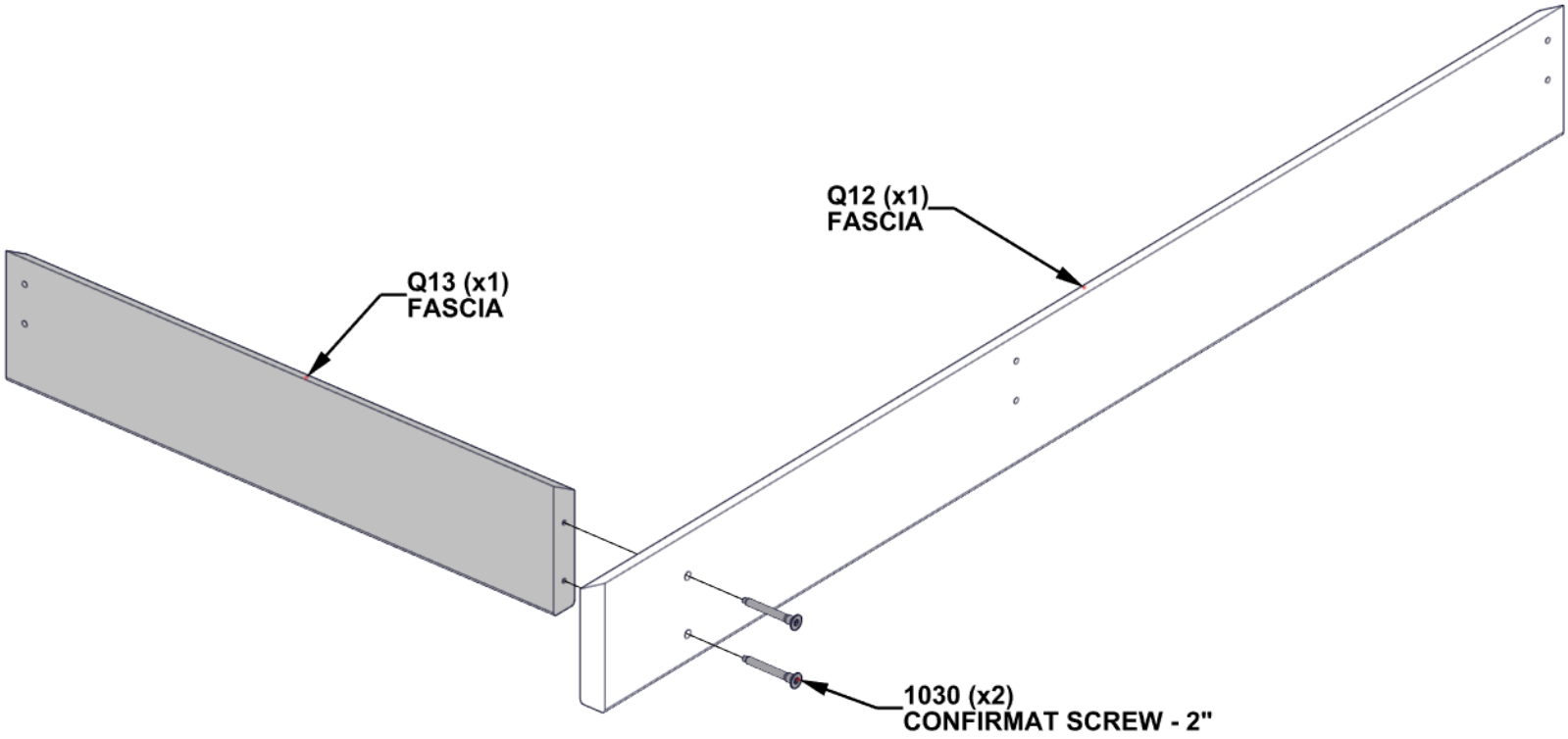

STEP 175 - FASCIA ASSEMBLY

QTY	PART NUMBER	DESCRIPTION
6	H100391	SCREW PFH 8x2 BLK

- ALIGN THROUGH HOLES IN FASCIA ASSEMBLY WITH PILOT HOLES IN ENDS OF RAFTERS AND ATTACH AS SHOWN.

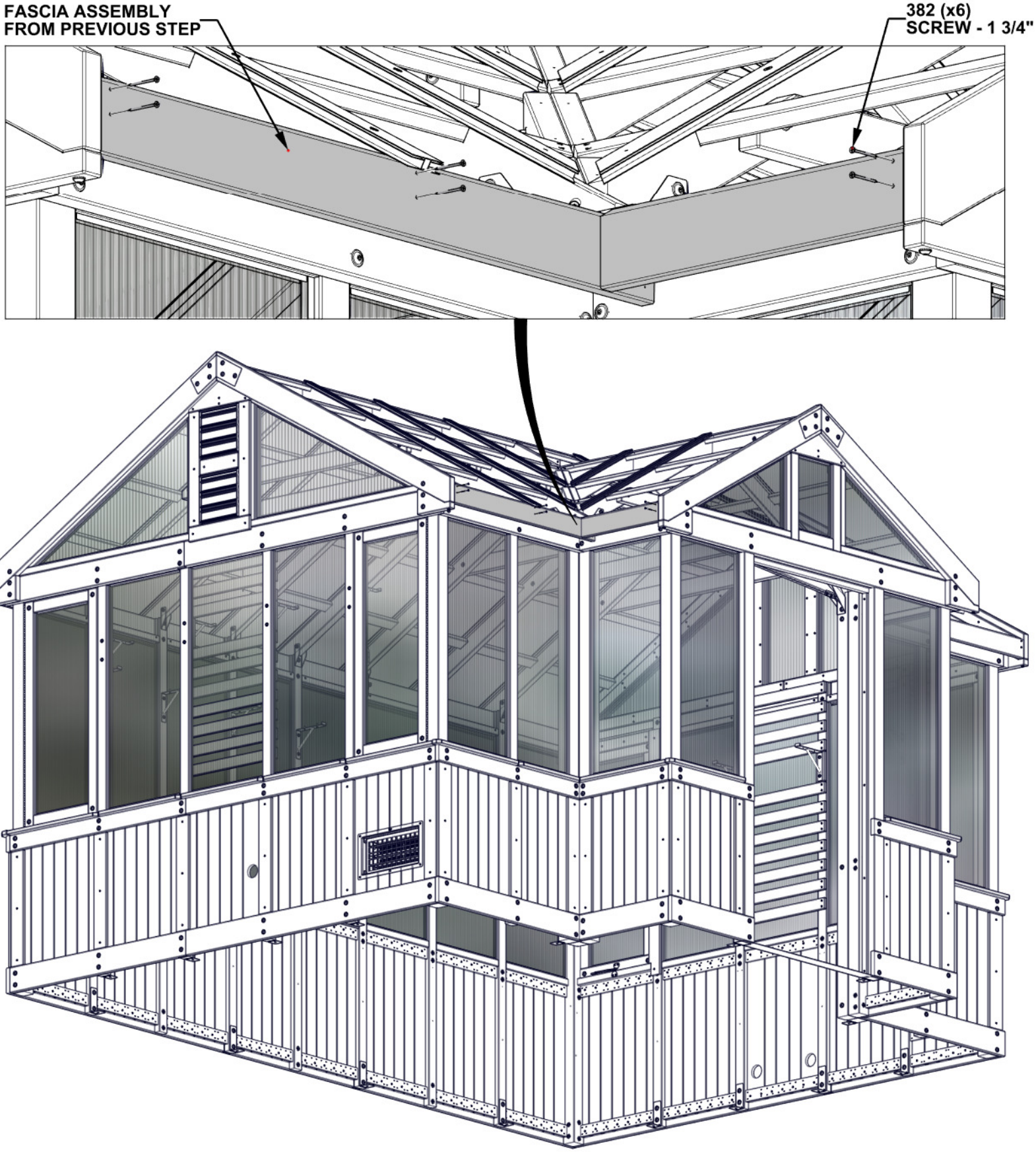

STEP 176 - SOFFIT ASSEMBLY

QTY	PART NUMBER	DESCRIPTION
8	H100395	SCREW PFH 8x3/4 BLK

- INSERT SCREWS INTO BACK SIDE OF FASCIA USING PILOT HOLES IN SOFFIT

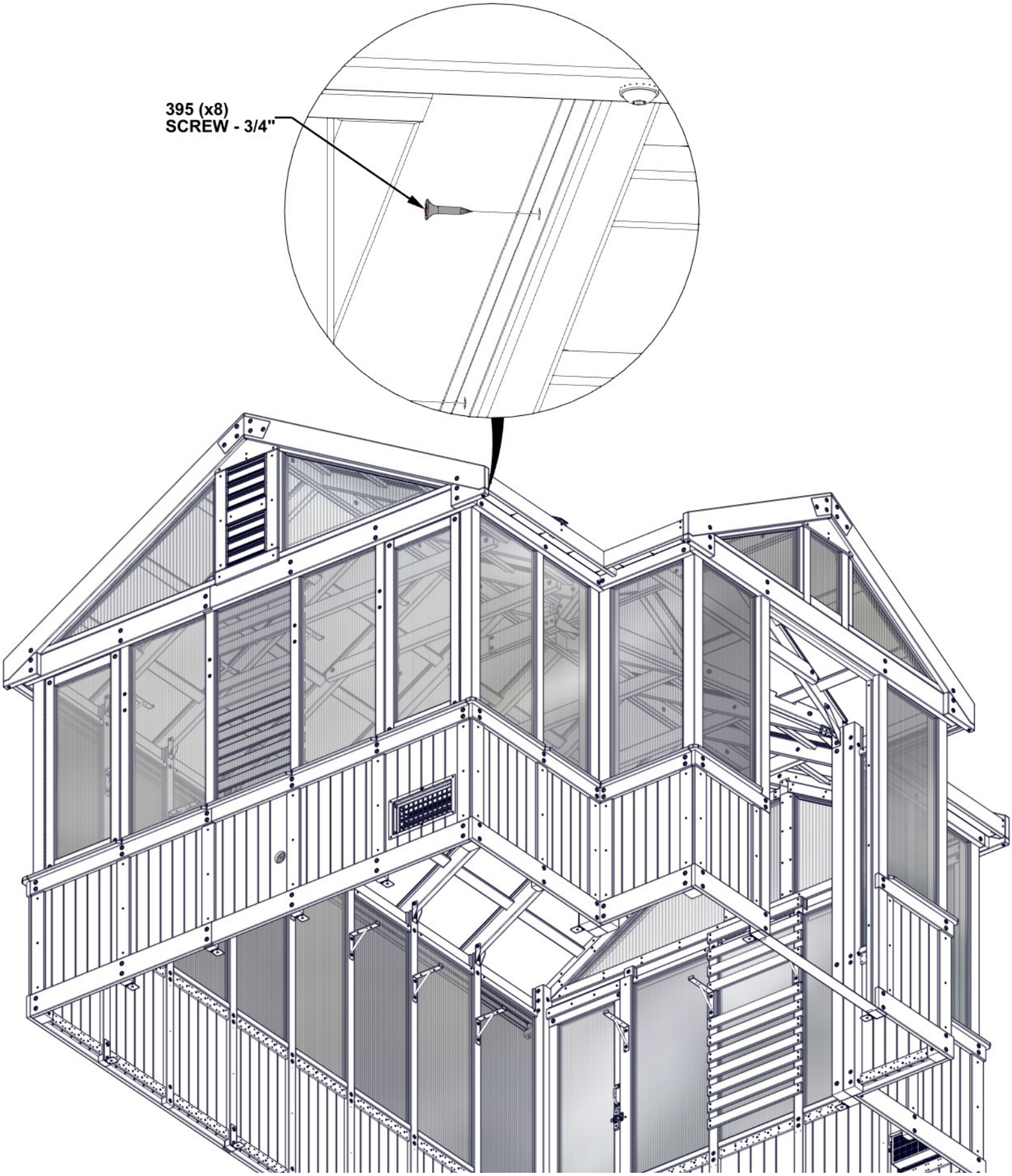

STEP 177 - FASCIA ASSEMBLY

QTY	PART NUMBER	DESCRIPTION
2	H101069	SCREW PWH 8x7/8 BLK

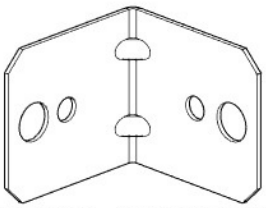

A4M00555 L BRACKET BLK
(x1)

- ATTACH BRACKET USING PILOT HOLE IN FASCIA, THEN INSERT OTHER SCREW INTO HEADER AS SHOWN.

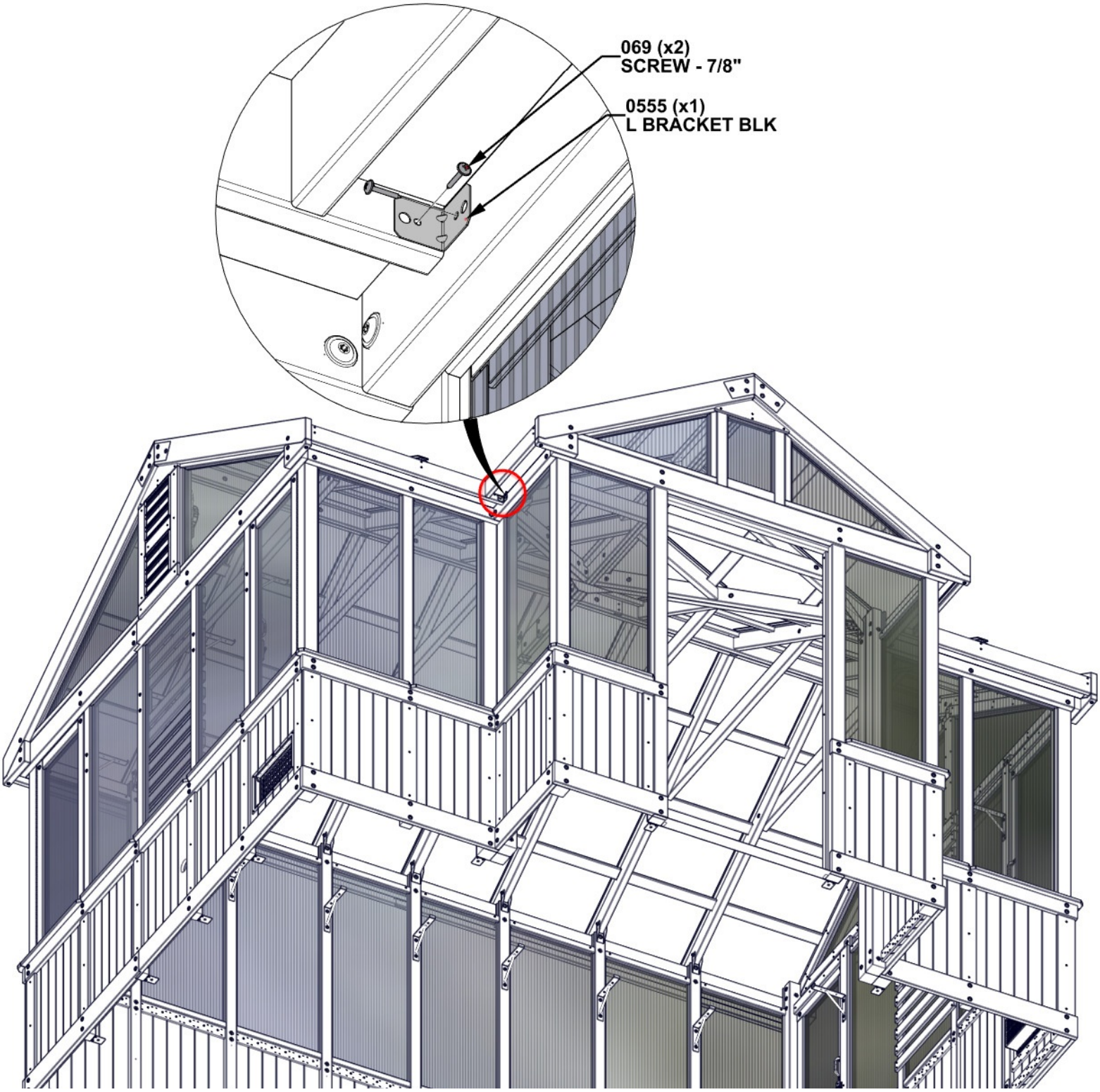

STEP 178 - ROOF ASSEMBLY

QTY	PART NUMBER	DESCRIPTION
8	H101205	SCREW PWH 8x15x3/4 BLK
8	H101469	SCREW PWH 8x15x1 1/2 BLK

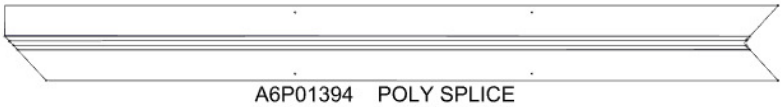

A6P01394 POLY SPLICE
(x1)

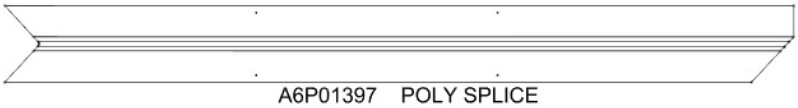

A6P01397 POLY SPLICE
(x1)

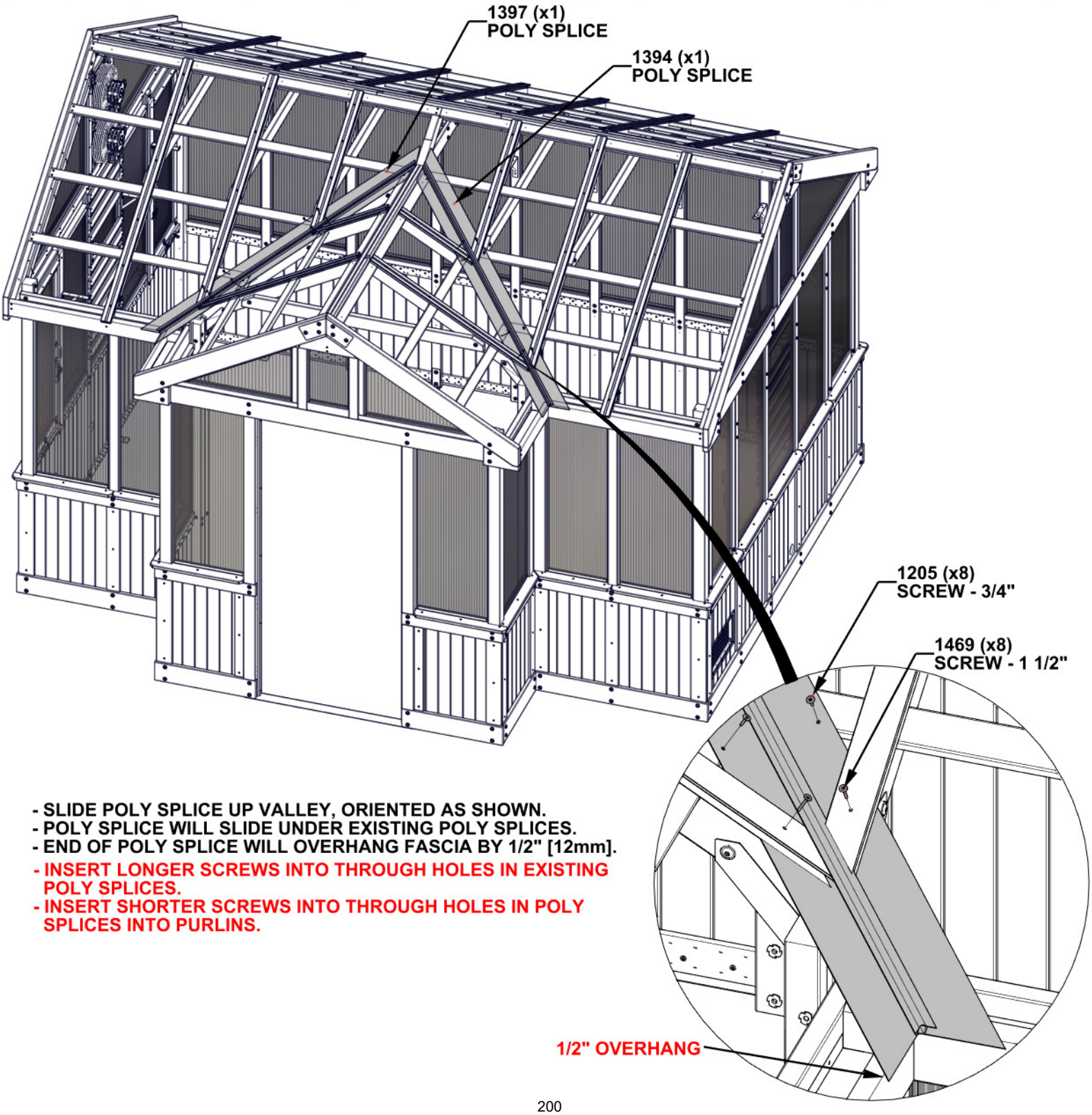

- SLIDE POLY SPLICE UP VALLEY, ORIENTED AS SHOWN.
- POLY SPLICE WILL SLIDE UNDER EXISTING POLY SPLICES.
- END OF POLY SPLICE WILL OVERHANG FASCIA BY 1/2" [12mm].
- INSERT LONGER SCREWS INTO THROUGH HOLES IN EXISTING POLY SPLICES.
- INSERT SHORTER SCREWS INTO THROUGH HOLES IN POLY SPLICES INTO PURLINS.

STEP 179 - ROOF ASSEMBLY

A6P01390 POLY CHANNEL
(x2)

REMOVE TAPE LINER ON POLY CHANNELS BEFORE INSTALLING.

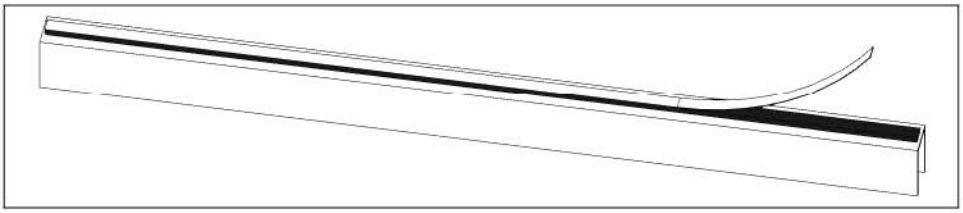

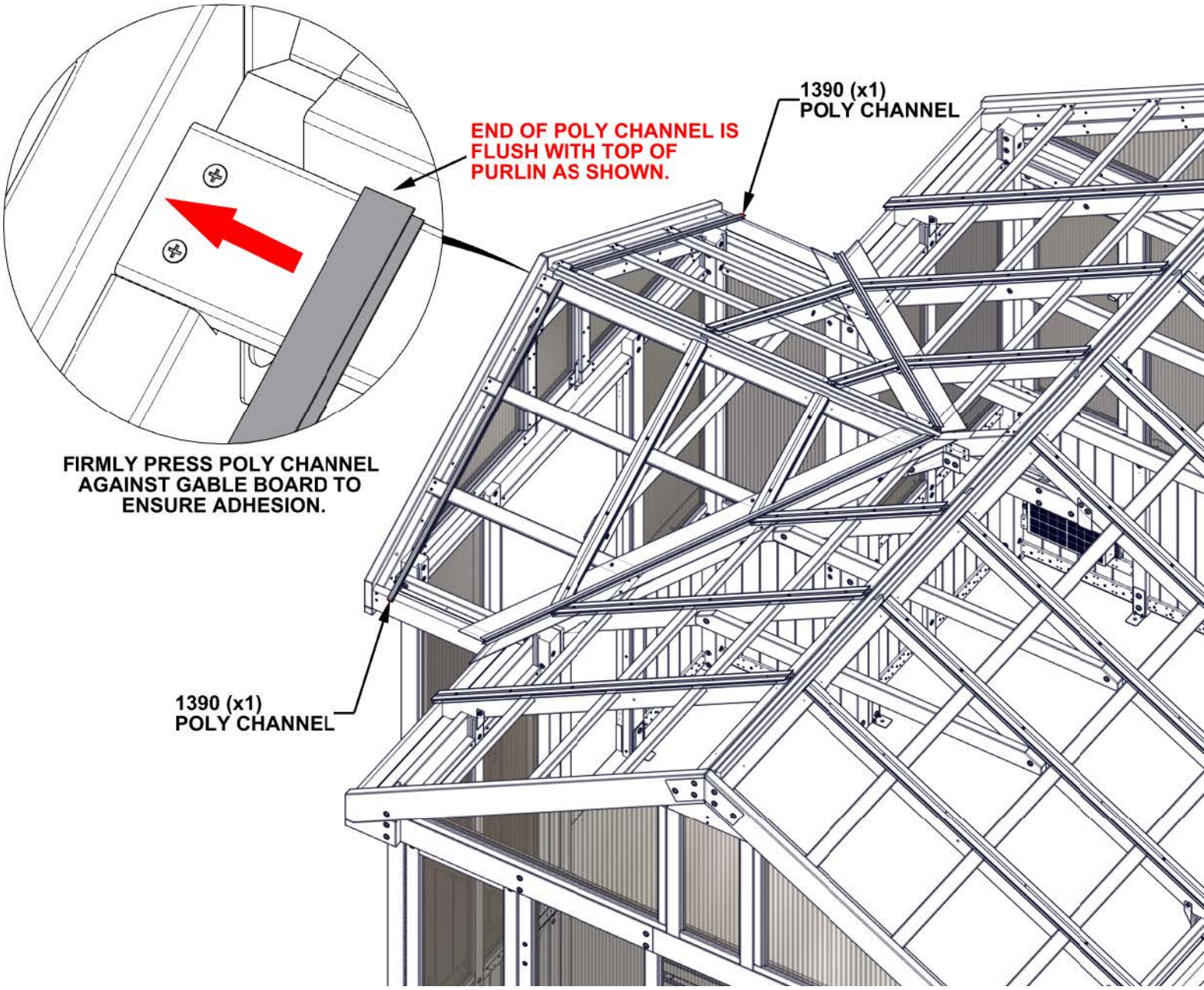

STEP 180 - ROOF ASSEMBLY

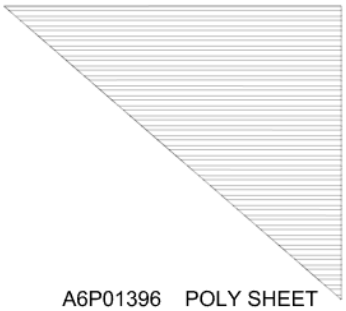

A6P01396 POLY SHEET
(x1)

A6P01412 POLY CHANNEL
(x1)

A6P00690 DUST SEAL TAPE

TO APPLY DUST SEAL TAPE AND POLY CHANNEL:
- **CUT A STRIP OF DUST SEAL TAPE THE SAME WIDTH AS THE POLY SHEET AND A SECOND THE SAME LENGTH AS THE ANGLED SIDE.**
- **WRAP DUST SEAL TAPE ALONG EDGE OF POLY SHEET WIDTH.**
- **AFTER TAPE IS SECURE, PUSH CHANNEL ON OVER THE TAPE, CENTERING ON THE POLY SHEET.**
- **REPEAT DUST SEAL TAPE ONLY ON THE ANGLED SIDE OF POLY SHEET.**

ENSURE POLY CHANNEL IS PLACED ON CORRECT SIDE WITH MEASUREMENT AS SHOWN.

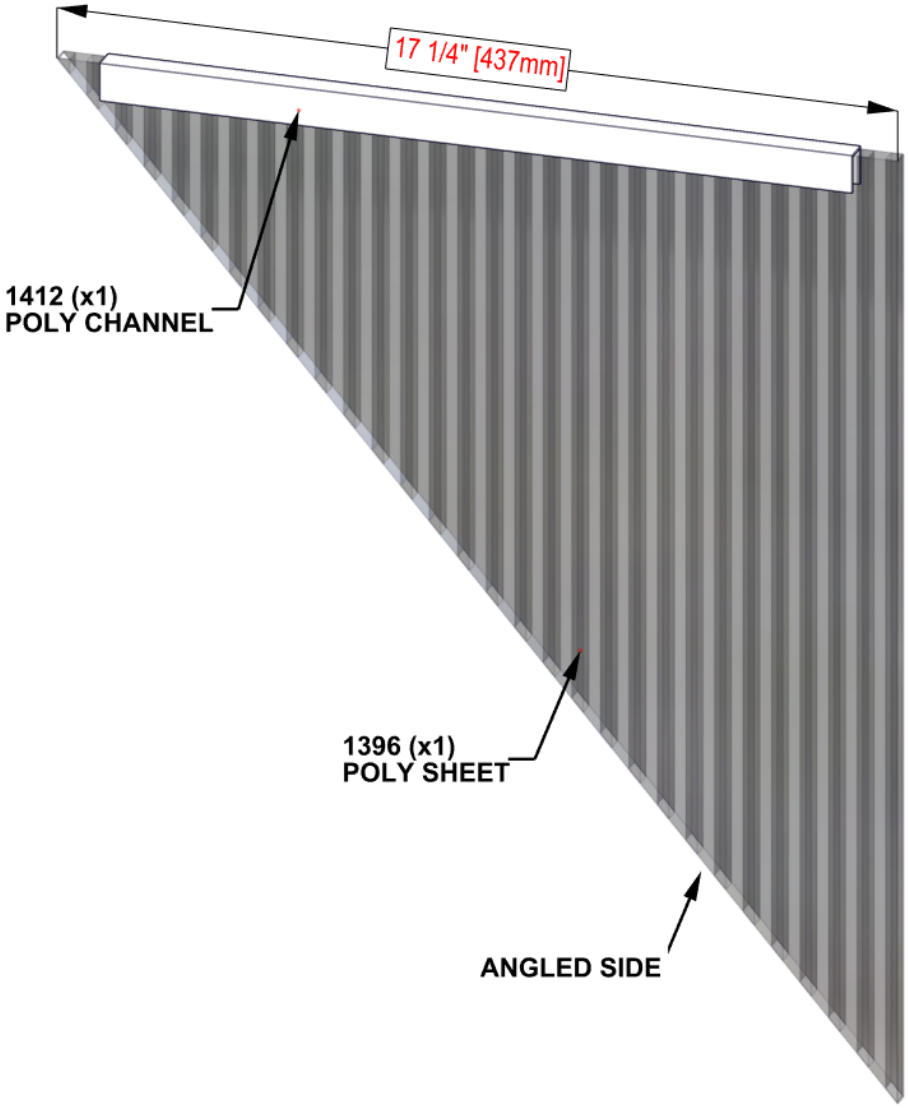

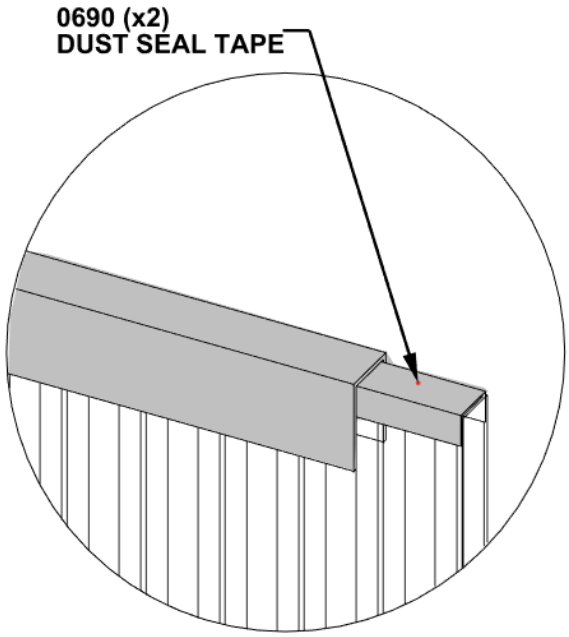

STEP 181 - ROOF ASSEMBLY

IMPORTANT!
- **ENSURE UV SIDE OF ROOF PANELS ARE FACING OUTSIDE.**
- **REMOVE THE PROTECTIVE FILM PRIOR TO INSTALLATION OF ROOF PANELS.**
- **SLIDE ROOF ASSEMBLY INTO PLACE AS SHOWN.**
- **ENSURE ROOF ASSEMBLY IS ORIENTED CORRECTLY WITH POLY CHANNEL AT THE TOP.**
- **POLY CHANNEL WILL BE FLUSH WITH END OF POLY SPLICE AT THE TOP.**
- **ANGLED SIDE OF ROOF ASSEMBLY WILL SLIDE INTO POLY SPLICE IN VALLEY.**

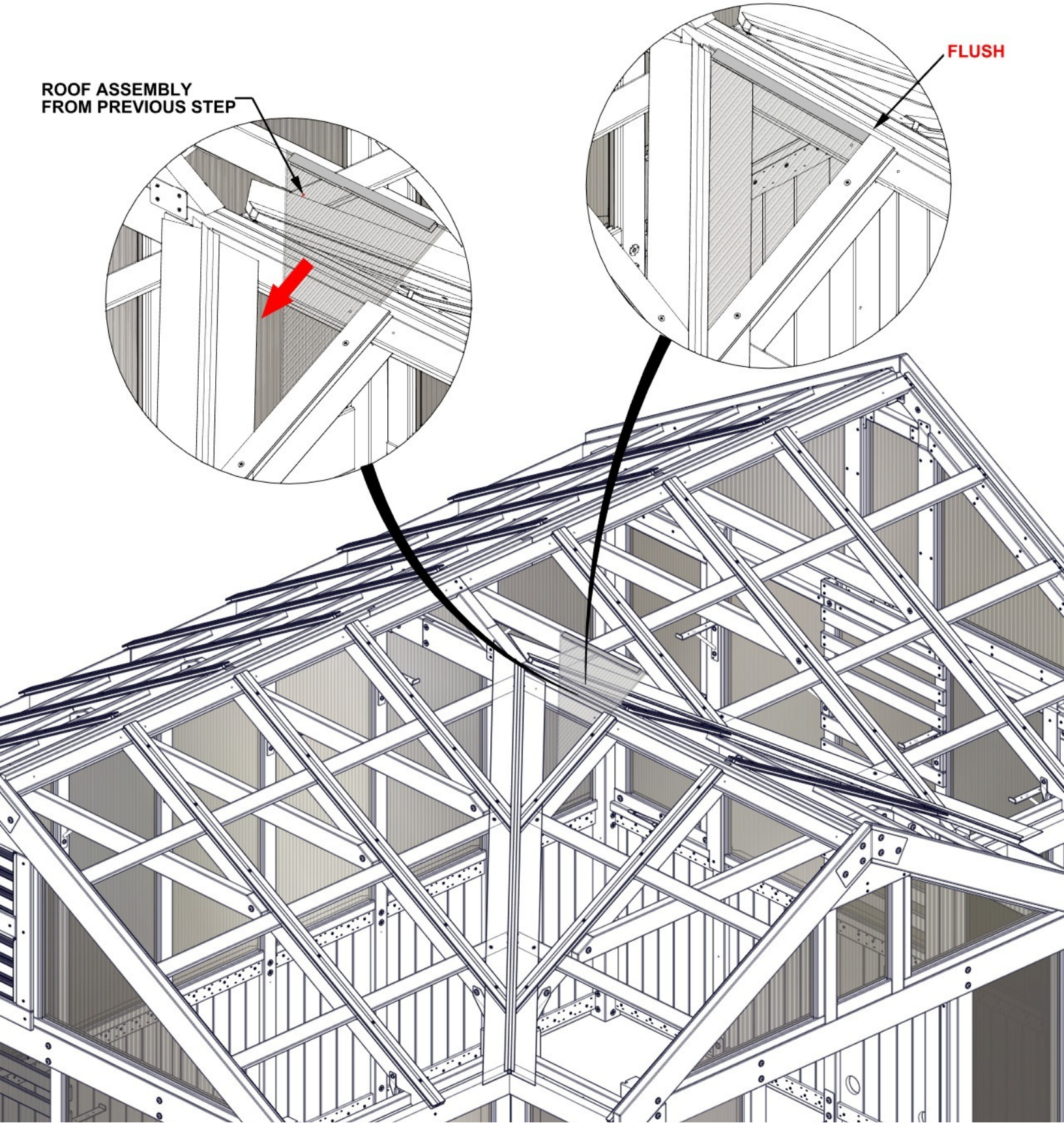

STEP 182 - ROOF ASSEMBLY

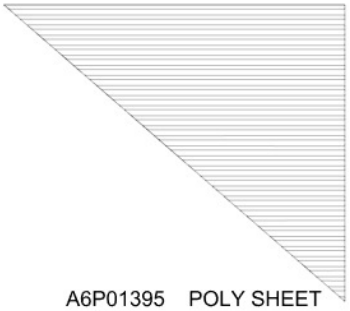

A6P01395 POLY SHEET
(x1)

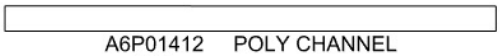

A6P01412 POLY CHANNEL
(x1)

A6P00690 DUST SEAL TAPE

TO APPLY DUST SEAL TAPE AND POLY CHANNEL:
- **CUT A STRIP OF DUST SEAL TAPE THE SAME WIDTH AS THE POLY SHEET AND A SECOND THE SAME LENGTH AS THE ANGLED SIDE.**
- **WRAP DUST SEAL TAPE ALONG EDGE OF POLY SHEET WIDTH.**
- **AFTER TAPE IS SECURE, PUSH CHANNEL ON OVER THE TAPE, CENTERING ON THE POLY SHEET.**
- **REPEAT DUST SEAL TAPE ONLY ON THE ANGLED SIDE OF POLY SHEET.**

ENSURE POLY CHANNEL IS PLACED ON CORRECT SIDE WITH MEASUREMENT AS SHOWN.

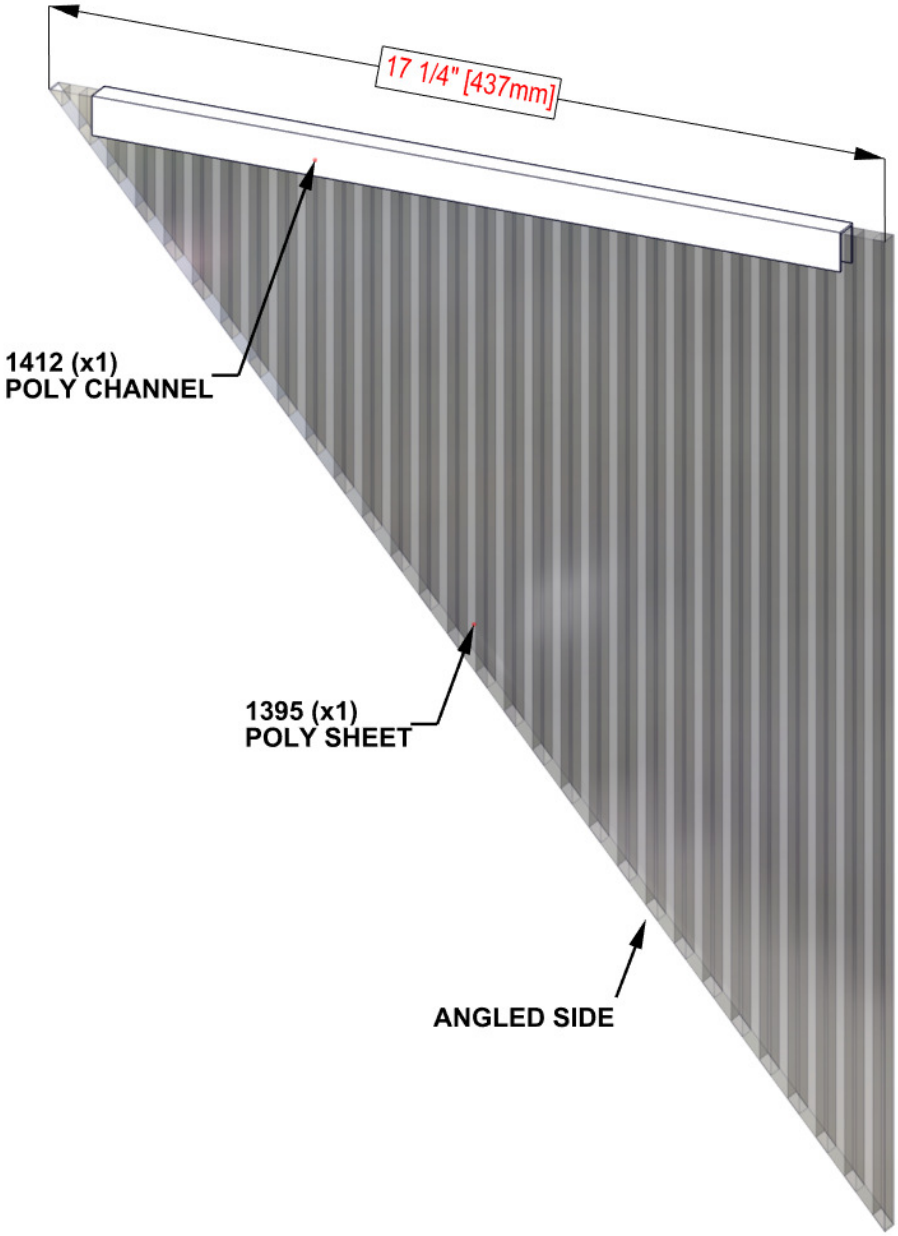

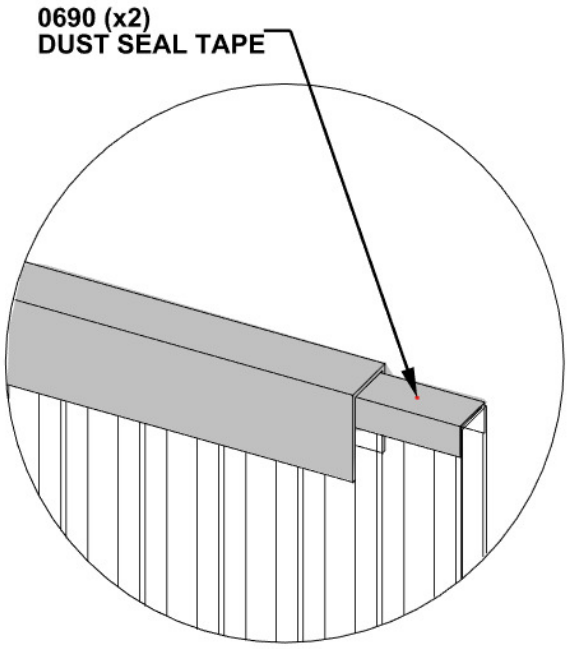

STEP 183 - ROOF ASSEMBLY

IMPORTANT!
- ENSURE UV SIDE OF ROOF PANELS ARE FACING OUTSIDE.
- REMOVE THE PROTECTIVE FILM PRIOR TO INSTALLATION OF ROOF PANELS.
- SLIDE ROOF ASSEMBLY INTO PLACE AS SHOWN.
- ENSURE ROOF ASSEMBLY IS ORIENTED CORRECTLY WITH POLY CHANNEL AT THE TOP.
- POLY CHANNEL WILL BE FLUSH WITH END OF POLY SPLICE AT THE TOP.
- ANGLED SIDE OF ROOF ASSEMBLY WILL SLIDE INTO POLY SPLICE IN VALLEY.

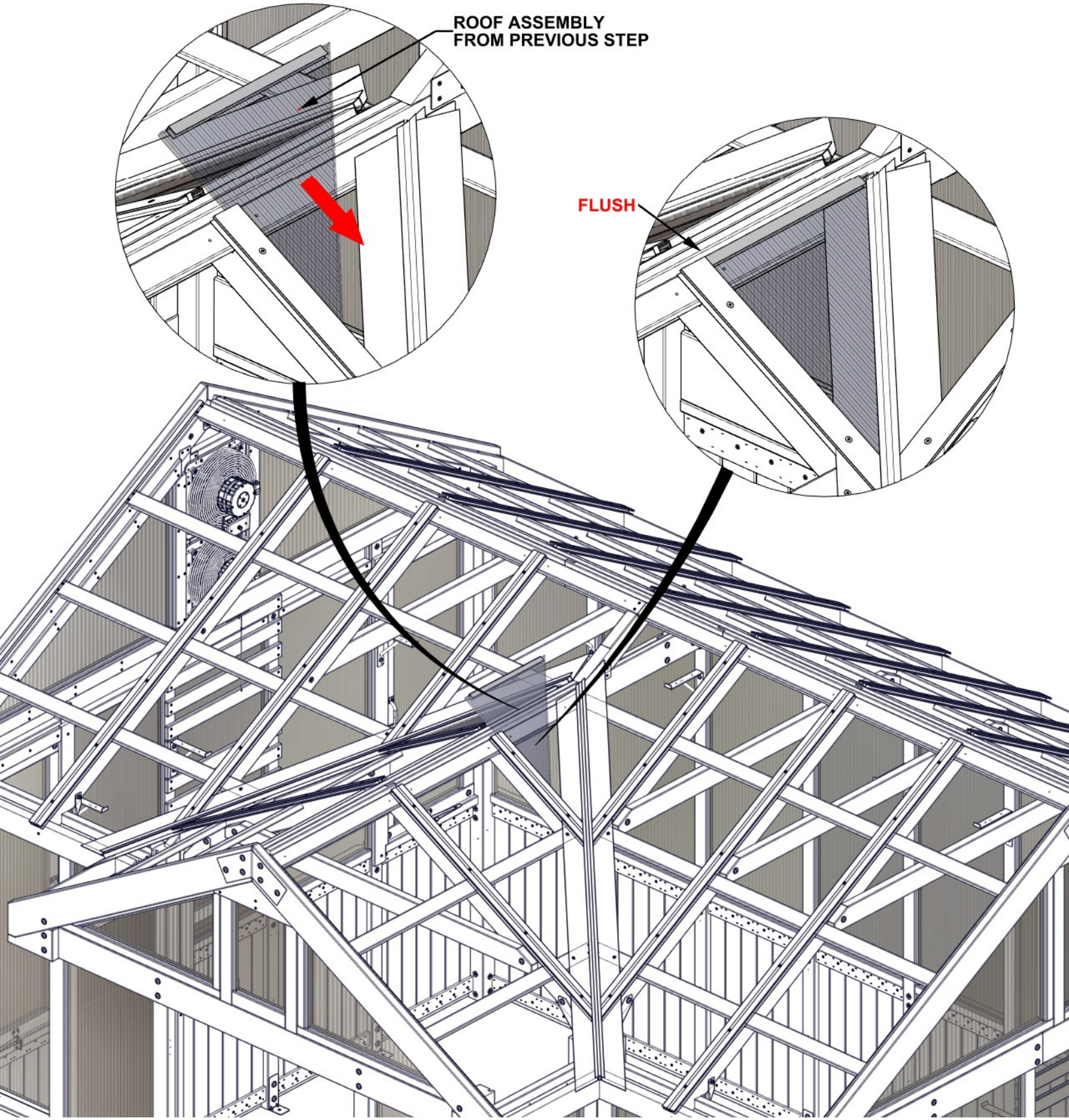

STEP 184 - ROOF ASSEMBLY

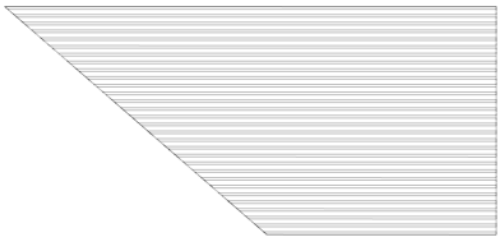

A6P01393 POLY SHEET
(x1)

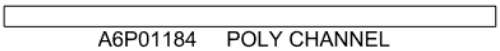

A6P01184 POLY CHANNEL
(x1)

A6P00690 DUST SEAL TAPE

TO APPLY DUST SEAL TAPE AND POLY CHANNEL:
- **CUT A STRIP OF DUST SEAL TAPE THE SAME WIDTH AS THE POLY SHEET AND A SECOND THE SAME LENGTH AS THE ANGLED SIDE.**
- **WRAP DUST SEAL TAPE ALONG EDGE OF POLY SHEET WIDTH.**
- **AFTER TAPE IS SECURE, PUSH CHANNEL ON OVER THE TAPE, CENTERING ON THE POLY SHEET.**
- **REPEAT DUST SEAL TAPE ONLY ON THE ANGLED SIDE OF POLY SHEET.**

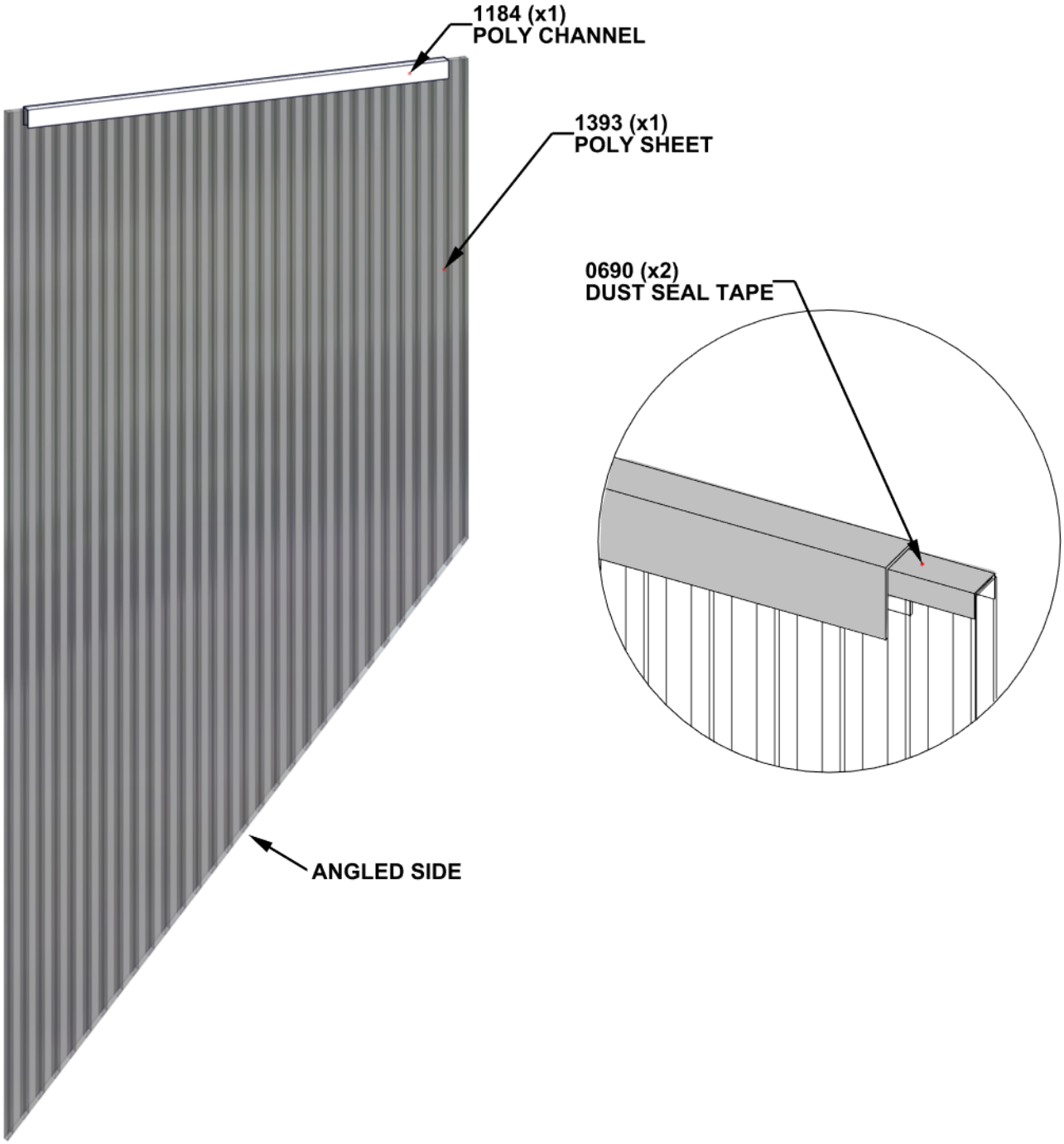

STEP 185 - ROOF ASSEMBLY

IMPORTANT!
- **ENSURE UV SIDE OF ROOF PANELS ARE FACING OUTSIDE.**
- **REMOVE THE PROTECTIVE FILM PRIOR TO INSTALLATION OF ROOF PANELS.**
- **SLIDE ROOF ASSEMBLY INTO PLACE AS SHOWN.**
- **ENSURE ROOF ASSEMBLY IS ORIENTED CORRECTLY.**
- **POLY CHANNEL WILL BE FLUSH WITH END OF POLY SPLICE AT THE TOP.**
- **ANGLED SIDE OF ROOF ASSEMBLY WILL SLIDE INTO POLY SPLICE IN VALLEY.**

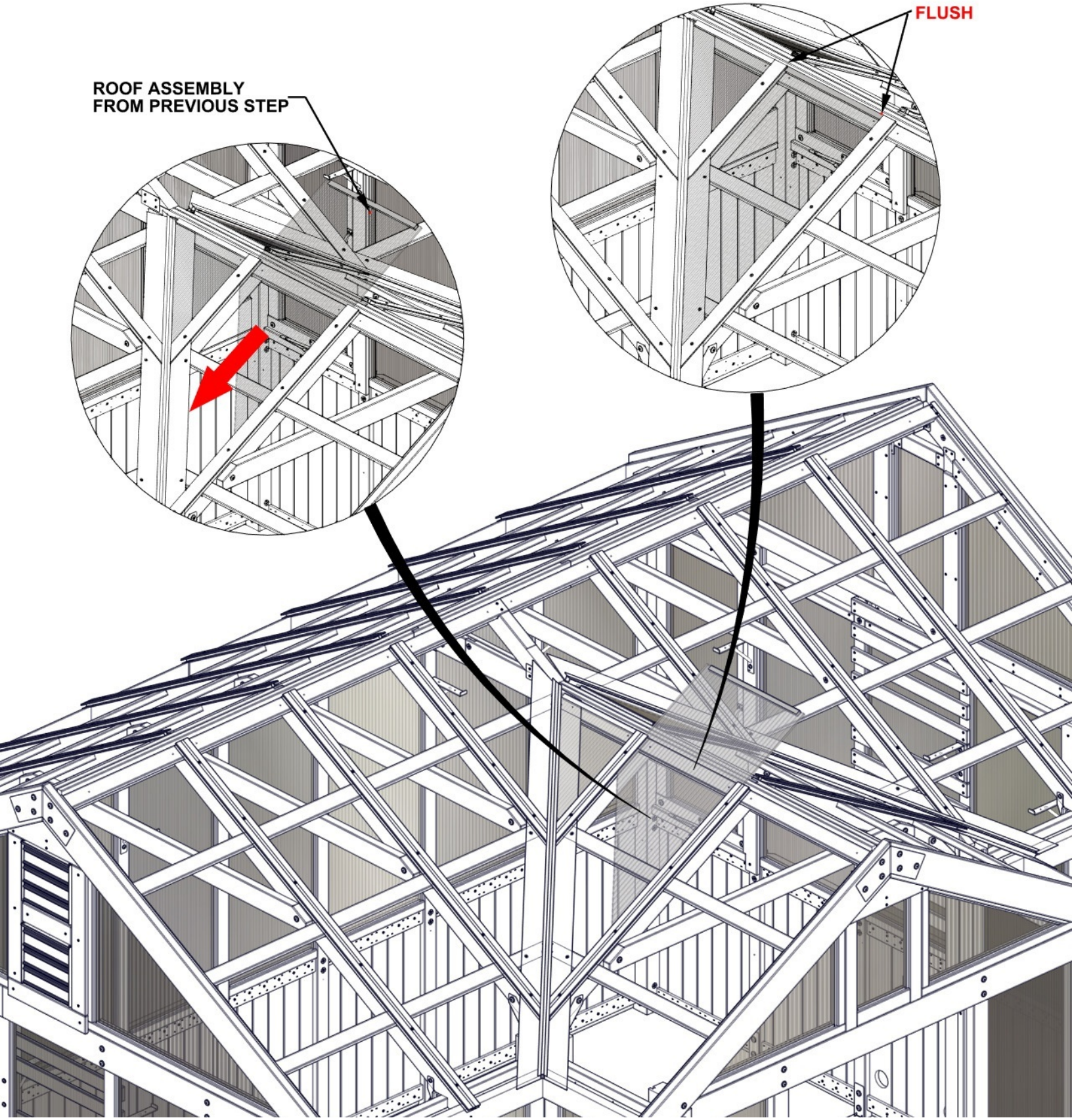

STEP 186 - ROOF ASSEMBLY

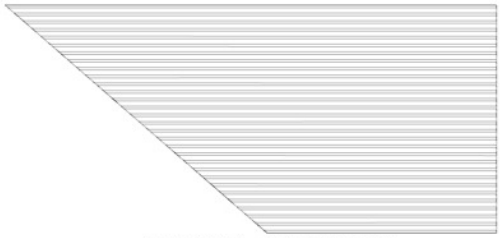

A6P01391 POLY SHEET
(x1)

A6P01184 POLY CHANNEL
(x1)

A6P00690 DUST SEAL TAPE

TO APPLY DUST SEAL TAPE AND POLY CHANNEL:
- **CUT A STRIP OF DUST SEAL TAPE THE SAME WIDTH AS THE POLY SHEET AND A SECOND THE SAME LENGTH AS THE ANGLED SIDE.**
- **WRAP DUST SEAL TAPE ALONG EDGE OF POLY SHEET WIDTH.**
- **AFTER TAPE IS SECURE, PUSH CHANNEL ON OVER THE TAPE, CENTERING ON THE POLY SHEET.**
- **REPEAT DUST SEAL TAPE ONLY ON THE ANGLED SIDE OF POLY SHEET.**

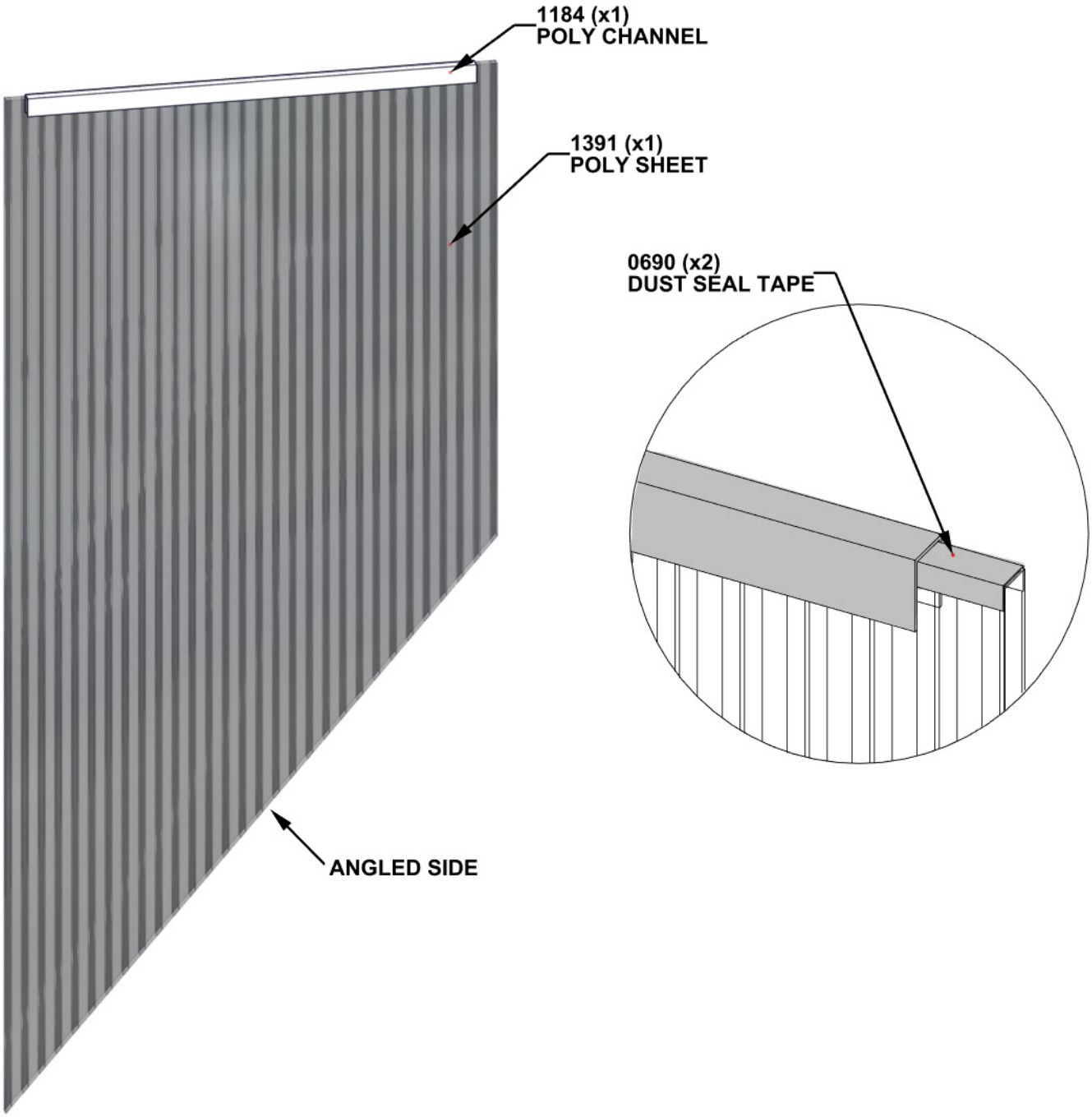

STEP 187 - ROOF ASSEMBLY

IMPORTANT!
- **ENSURE UV SIDE OF ROOF PANELS ARE FACING OUTSIDE.**
- **REMOVE THE PROTECTIVE FILM PRIOR TO INSTALLATION OF ROOF PANELS.**
- **SLIDE ROOF ASSEMBLY INTO PLACE AS SHOWN.**
- **ENSURE ROOF ASSEMBLY IS ORIENTED CORRECTLY.**
- **POLY CHANNEL WILL BE FLUSH WITH END OF POLY SPLICE AT THE TOP.**
- **ANGLED SIDE OF ROOF ASSEMBLY WILL SLIDE INTO POLY SPLICE IN VALLEY.**

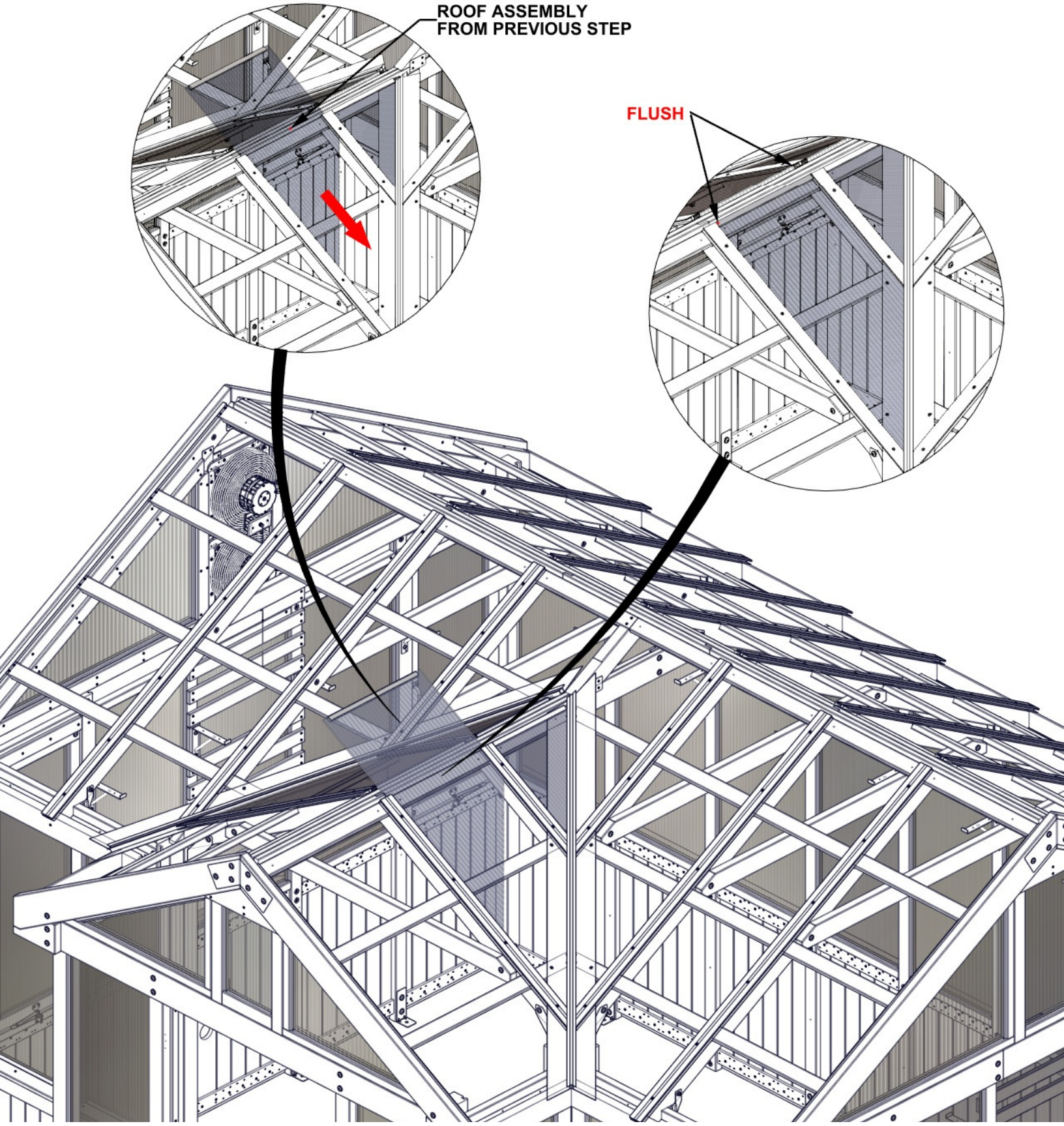

STEP 188 - ROOF ASSEMBLY

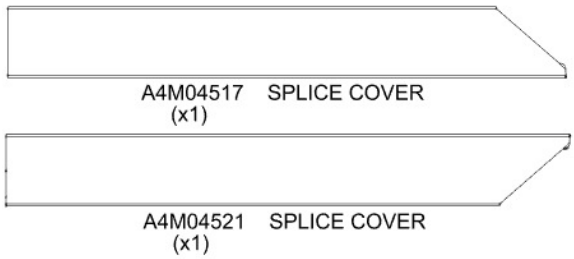

WARNING: GLOVES ARE RECOMMENDED WHEN HANDLING STEEL.

REMOVE BLUE FILM FROM TRIM.

TABS OF SPLICE COVER SLIDE INTO POLY SPLICE AS SHOWN.

POLY SPLICE

SLIDE SPLICE COVER DOWN UNTIL THE END IS FLUSH WITH THE TOP OF POLY SPLICE.

4521 (x1) SPLICE COVER

4517 (x1) SPLICE COVER

STEP 189 - ROOF ASSEMBLY

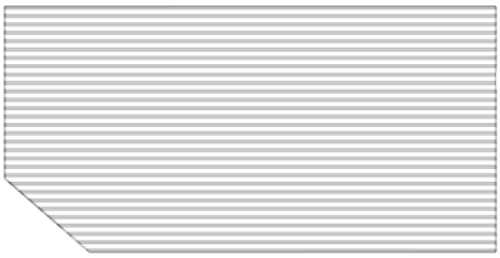

A6P01392 POLY SHEET
(x1)

A6P01411 POLY CHANNEL
(x1)

A6P01409 POLY CHANNEL
(x1)

A6P00690 DUST SEAL TAPE

TO APPLY DUST SEAL TAPE AND POLY CHANNEL:
- CUT ONE STRIP OF DUST SEAL TAPE THE SAME WIDTH AS THE POLY SHEET.
- CUT TWO MORE STRIPS OF DUST SEAL TAPE FOR BOTH SIDES OF BOTTOM OF POLY SHEET.
- WRAP DUST SEAL TAPE ALONG EDGE OF POLY SHEET WIDTH.
- AFTER TAPE IS SECURE, PUSH CHANNEL ON OVER THE TAPE, CENTERING ON THE POLY SHEET.
- REPEAT ON BOTH BOTTOM SIDES OF POLY SHEET.

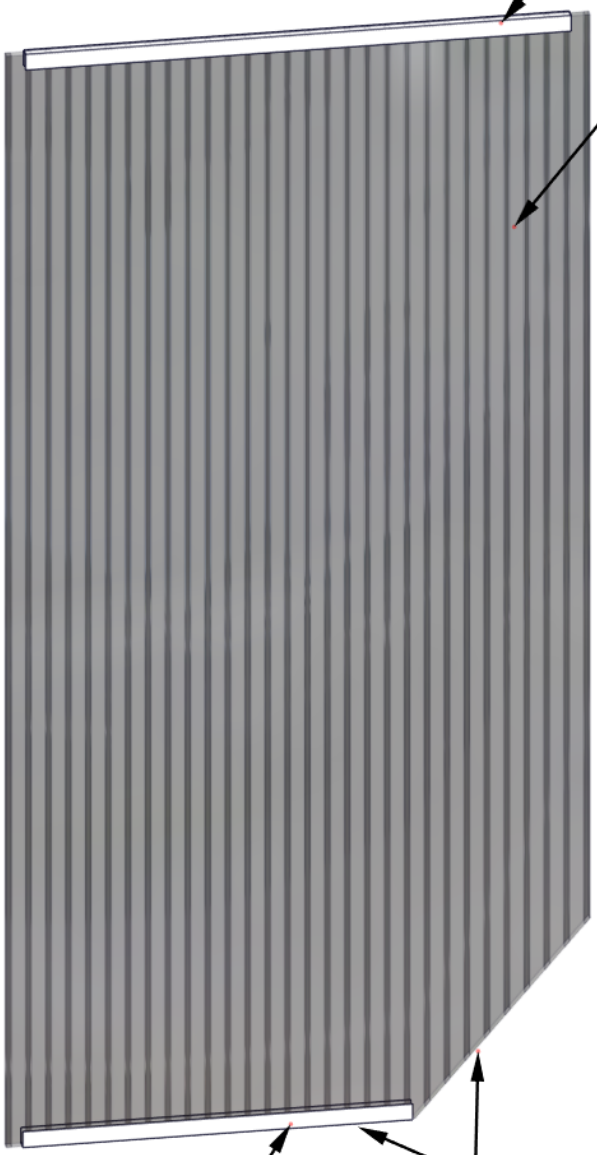

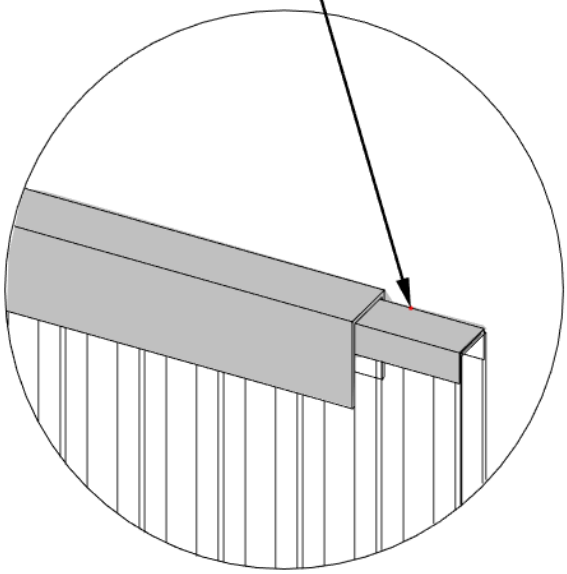

DUST SEAL TAPE ON BOTH BOTTOM SIDES.

STEP 190 - ROOF ASSEMBLY

IMPORTANT!
- ENSURE UV SIDE OF ROOF PANELS ARE FACING OUTSIDE.
- REMOVE THE PROTECTIVE FILM PRIOR TO INSTALLATION OF ROOF PANELS.
- SLIDE ROOF ASSEMBLY INTO PLACE AS SHOWN.
- ENSURE ROOF ASSEMBLY IS ORIENTED CORRECTLY.
- POLY CHANNEL WILL BE FLUSH WITH END OF POLY SPLICE AT THE TOP.
- ANGLED SIDE OF ROOF ASSEMBLY WILL SLIDE INTO POLY SPLICE IN VALLEY.

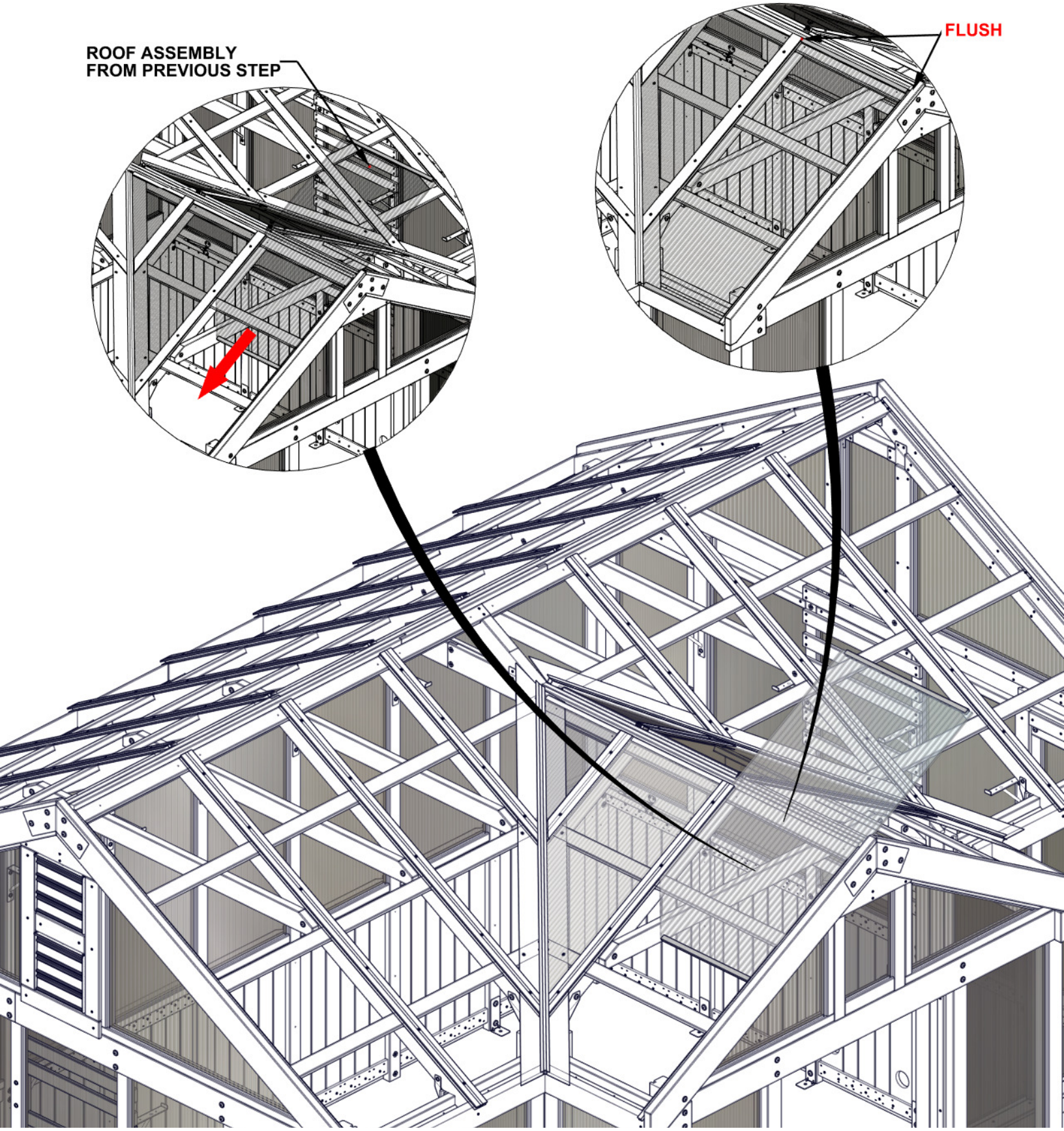

STEP 191 - ROOF ASSEMBLY

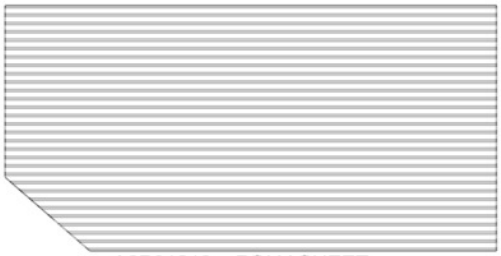

A6P01218 POLY SHEET
(x1)

A6P01411 POLY CHANNEL
(x1)

A6P01409 POLY CHANNEL
(x1)

A6P00690 DUST SEAL TAPE

TO APPLY DUST SEAL TAPE AND POLY CHANNEL:
- CUT ONE STRIP OF DUST SEAL TAPE THE SAME WIDTH AS THE POLY SHEET.
- CUT TWO MORE STRIPS OF DUST SEAL TAPE FOR BOTH SIDES OF BOTTOM OF POLY SHEET.
- WRAP DUST SEAL TAPE ALONG EDGE OF POLY SHEET WIDTH.
- AFTER TAPE IS SECURE, PUSH CHANNEL ON OVER THE TAPE, CENTERING ON THE POLY SHEET.
- REPEAT ON BOTH BOTTOM SIDES OF POLY SHEET.

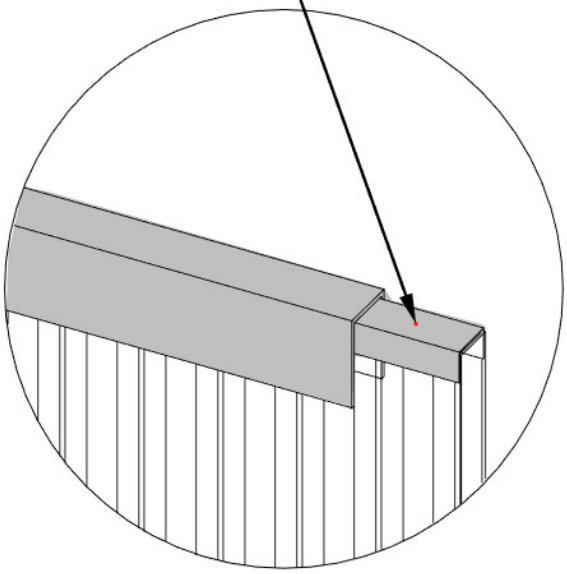

DUST SEAL TAPE ON BOTH BOTTOM SIDES.

STEP 192 - ROOF ASSEMBLY

IMPORTANT!
- **ENSURE UV SIDE OF ROOF PANELS ARE FACING OUTSIDE.**
- **REMOVE THE PROTECTIVE FILM PRIOR TO INSTALLATION OF ROOF PANELS.**
- **SLIDE ROOF ASSEMBLY INTO PLACE AS SHOWN.**
- **ENSURE ROOF ASSEMBLY IS ORIENTED CORRECTLY.**
- **POLY CHANNEL WILL BE FLUSH WITH END OF POLY SPLICE AT THE TOP.**
- **ANGLED SIDE OF ROOF ASSEMBLY WILL SLIDE INTO POLY SPLICE IN VALLEY.**

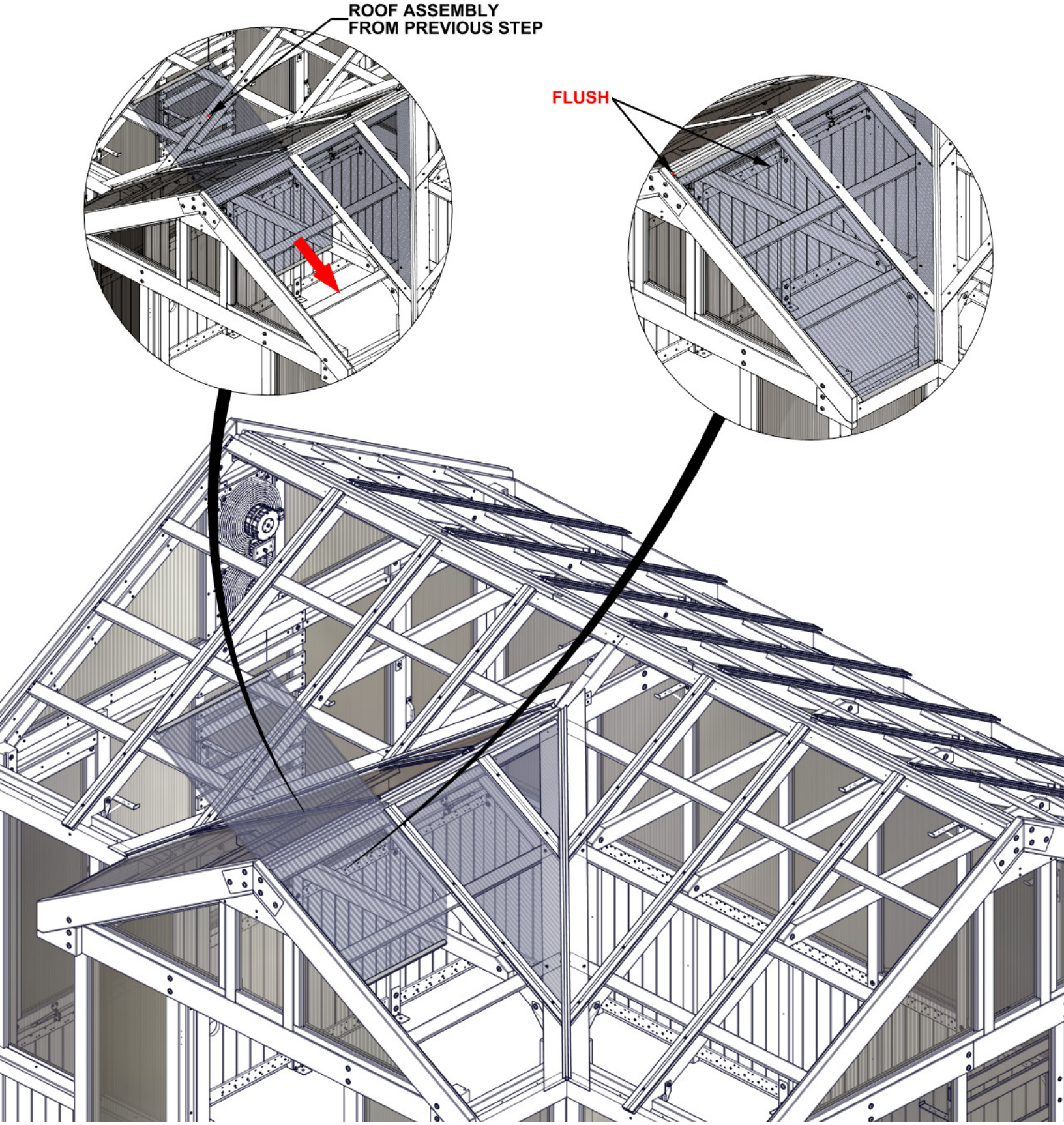

STEP 193 - ROOF ASSEMBLY

A4M04515 SPLICE COVER
(x1)

A4M04520 SPLICE COVER
(x1)

WARNING: GLOVES ARE RECOMMENDED WHEN HANDLING STEEL.

REMOVE BLUE FILM FROM TRIM.

TABS OF SPLICE COVER SLIDE INTO POLY SPLICE AS SHOWN.

SLIDE SPLICE COVER DOWN UNTIL THE END IS FLUSH WITH THE TOP OF POLY SPLICE.

4520 (x1) SPLICE COVER

4515 (x1) SPLICE COVER

POLY SPLICE

STEP 194 - ROOF ASSEMBLY

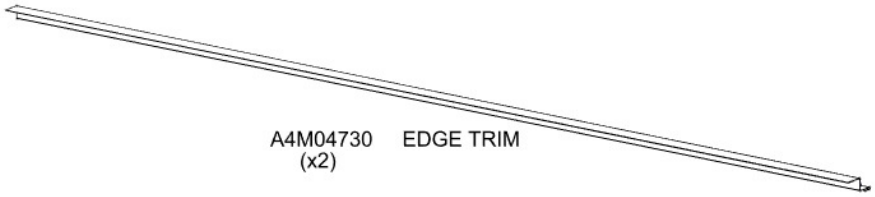

WARNING: GLOVES ARE RECOMMENDED WHEN HANDLING STEEL.

REMOVE BLUE FILM FROM TRIM.

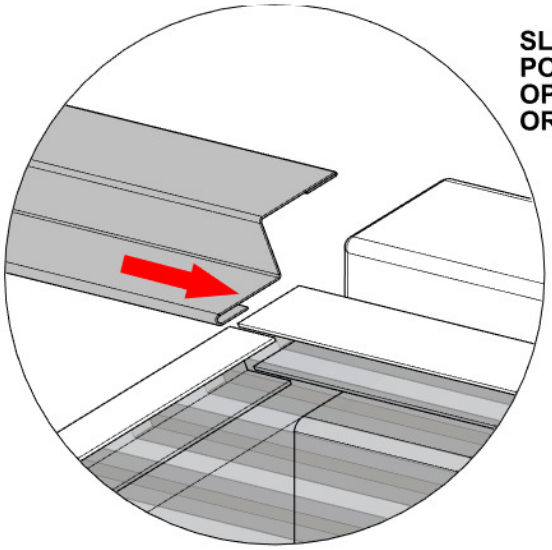

SLIDE TRIM INTO PLACE WITH POLY CHANNEL FITTING INTO OPEN HEM. ENSURE CORRECT ORIENTATION AS SHOWN.

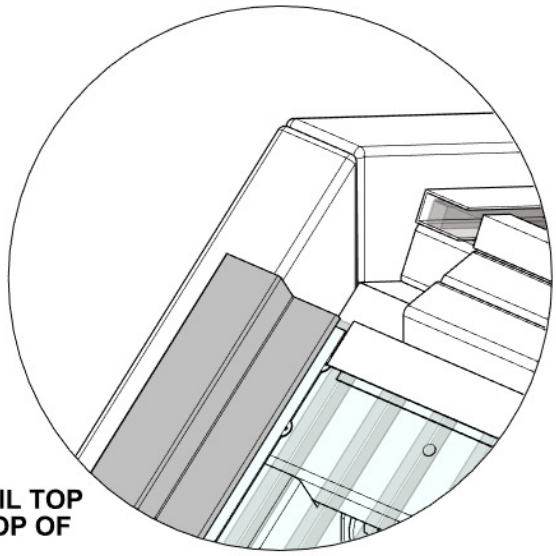

SLIDE INTO POSITION UNTIL TOP OF TRIM IS FLUSH WITH TOP OF ROOF PANEL AS SHOWN.

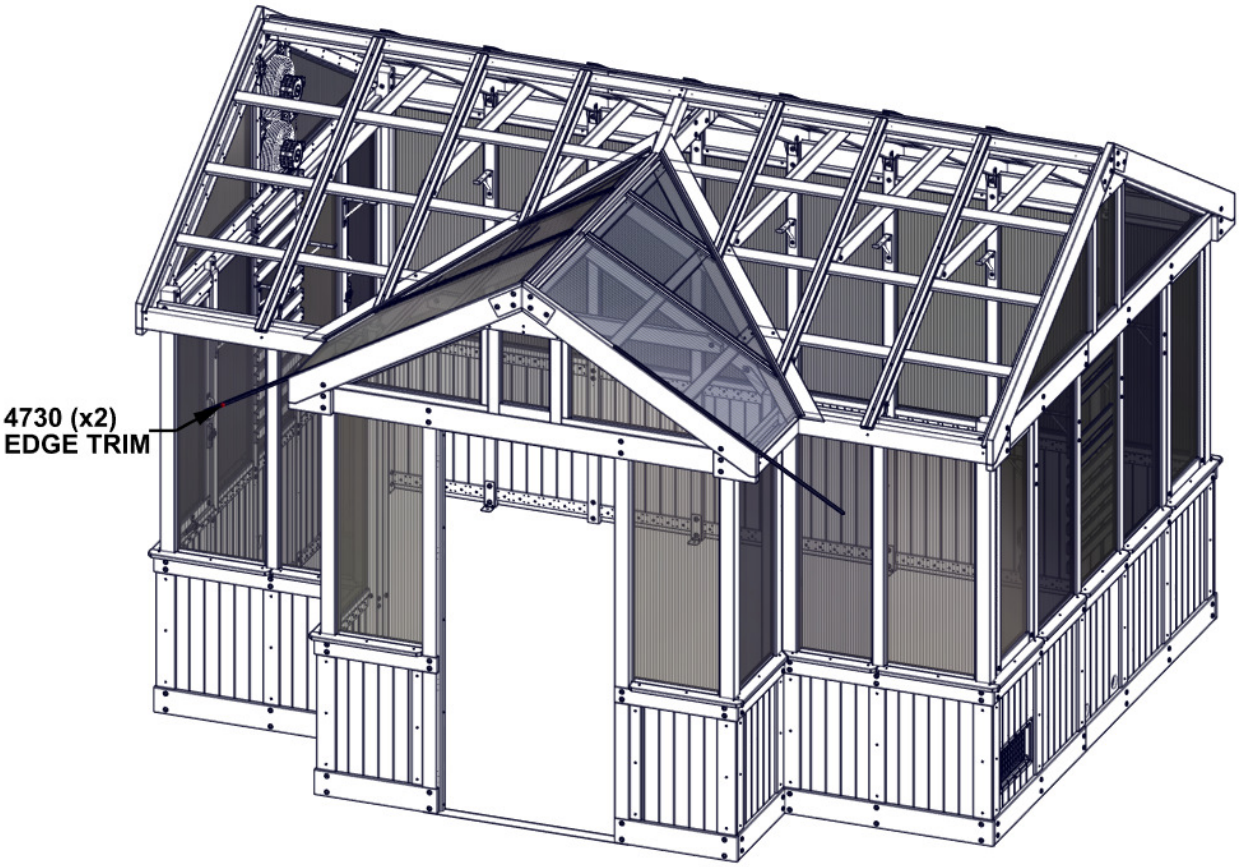

STEP 195 - ROOF ASSEMBLY

QTY	PART NUMBER	DESCRIPTION
6	H101117	SCREW WOODGRIP 10-16x3/4" BLK

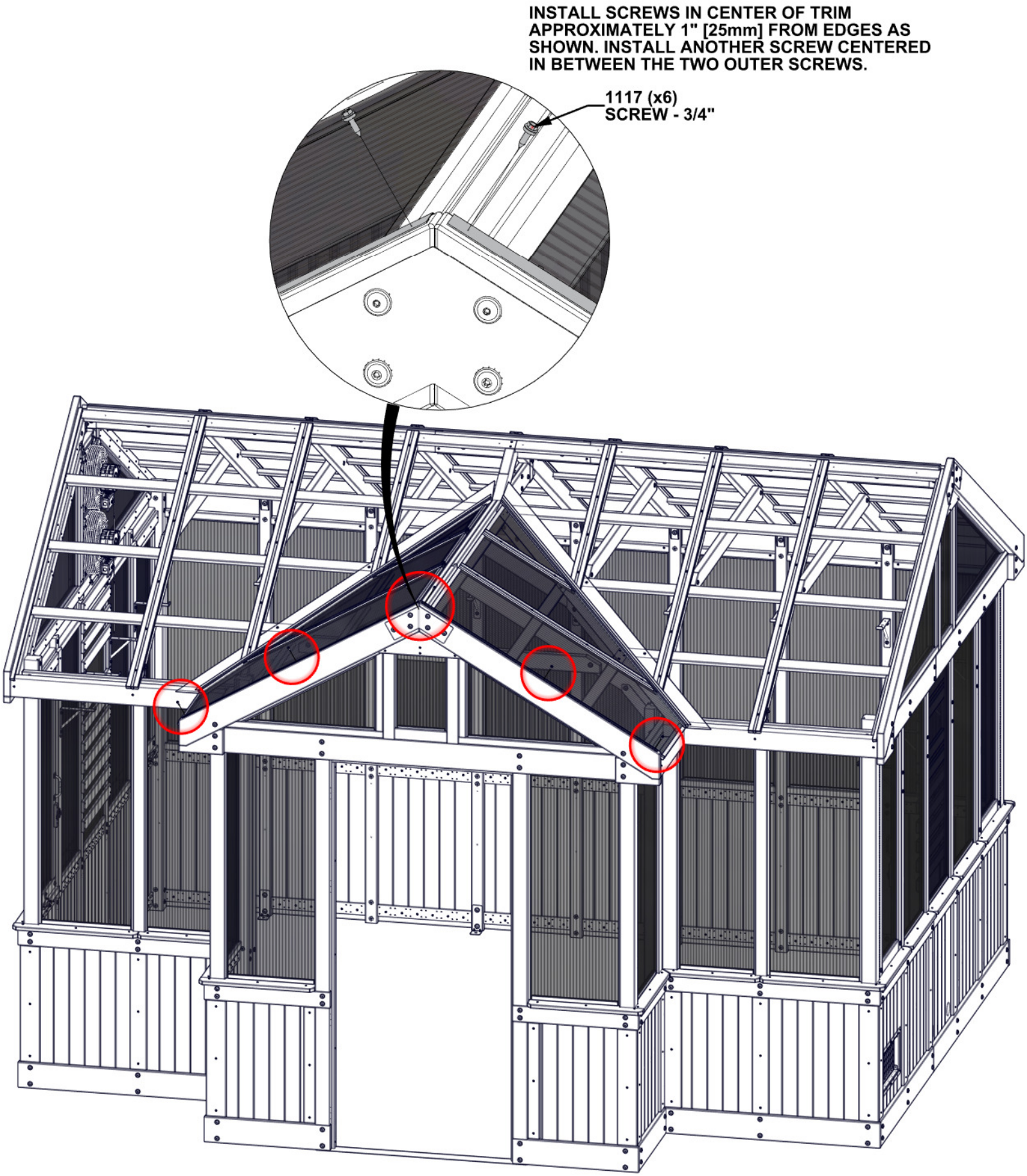

STEP 196 - RIDGE CAP ASSEMBLY

QTY	PART NUMBER	DESCRIPTION
6	H101117	SCREW WOODGRIP 10-16x3/4" BLK

J21 RIDGE CAP STIFFENER - W4L21279
(x2) 15/16"x2 3/8"x64 5/16" (24x60x1634)

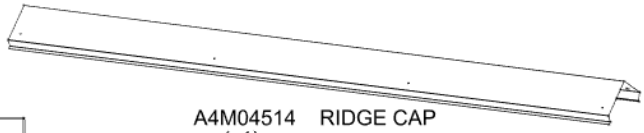

A4M04514 RIDGE CAP
(x1)

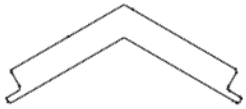

A6P00693 RIDGE CAP PROTECTOR
(x1)

WARNING: GLOVES ARE RECOMMENDED WHEN HANDLING STEEL.

REMOVE BLUE FILM FROM TRIM.

J21 (x2)
RIDGE CAP STIFFENER

RIDGE CAP STIFFENER BOARDS WILL BE FLUSH TO END OF RIDGE CAP ON THIS END.

DO NOT INSERT SCREWS IN THESE HOLES.

1117 (x6)
SCREW - 3/4"

4514 (x1)
RIDGE CAP

REMOVE SPACERS FROM RIDGE CAP PROTECTOR BEFORE INSTALLING.

693 (x1)
RIDGE CAP PROTECTOR

STEP 197 - RIDGE CAP ASSEMBLY

QTY	PART NUMBER	DESCRIPTION
4	H101117	SCREW WOODGRIP 10-16x3/4" BLK

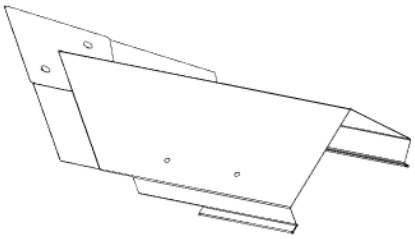

A4M04516 (x1) RIDGE CAP FLANGE

- SLIDE RIDGE CAP FLANGE ONTO RIDGE CAP.
- ALIGN HIGHLIGHTED HOLES WITH HOLES IN RIDGE CAP AND INSERT SCREWS.
- INSERT REMAINING SCREWS.

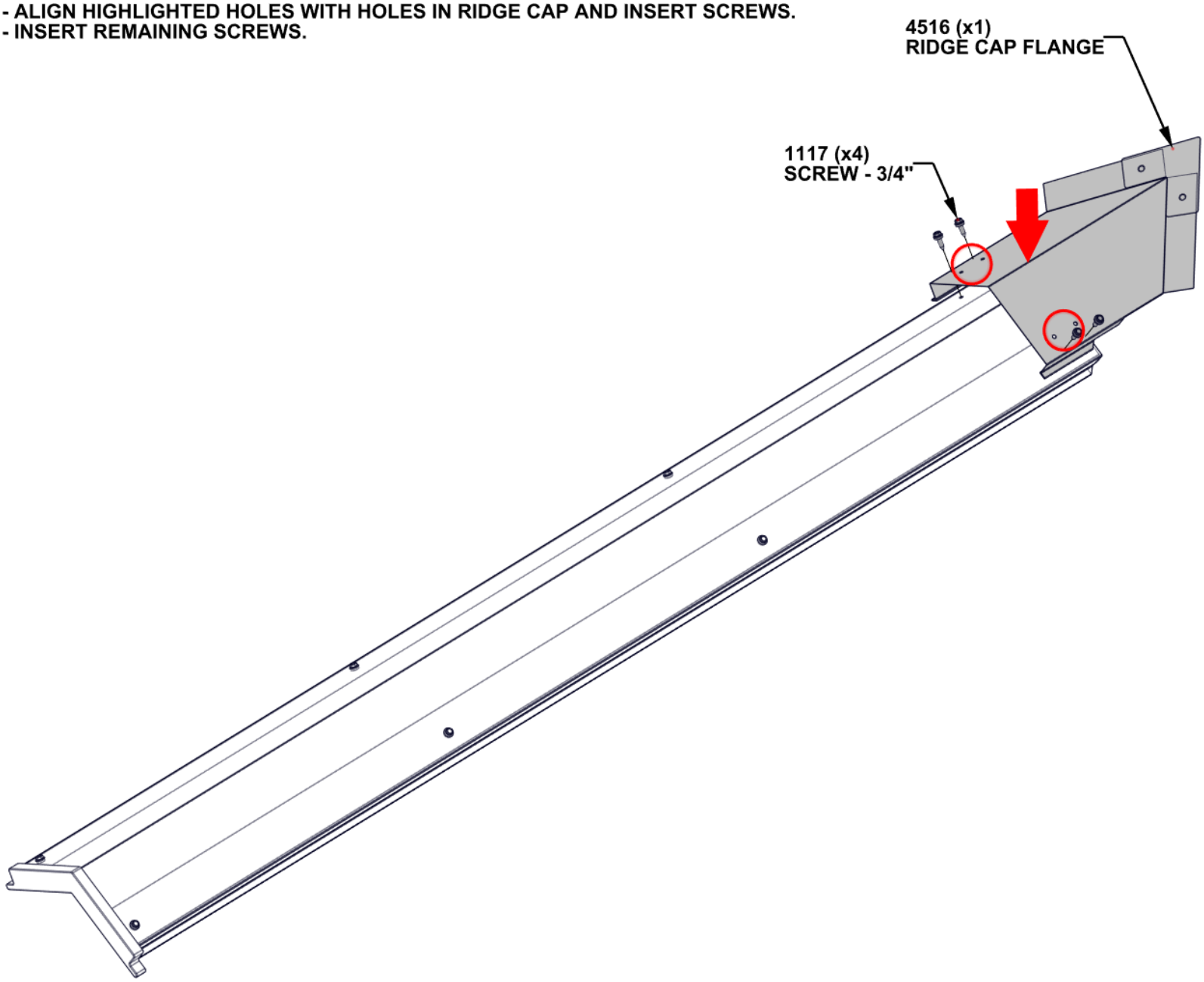

STEP 198 - RIDGE CAP ASSEMBLY

QTY	PART NUMBER	DESCRIPTION
12	H100483	SCREW PFH 8x2 1/4 BLK

WARNING: GLOVES ARE RECOMMENDED WHEN HANDLING STEEL.
- TWO ADULTS WILL BE NEEDED FOR THIS STEP.
- DO NOT CLIMB ON ROOF TO INSTALL RIDGE CAP.
- RIDGE CAP HAS BEEN DESIGNED TO INSTALL WITH THE USE OF A LADDER.

- PLACE RIDGE CAP ASSEMBLY ON TOP OF ROOF RIDGE UNTIL BOTH ENDS ARE SEATED AS SHOWN.
- ONE ADULT MUST KEEP DOWNWARD PRESSURE ON THE RIDGE CAP ASSEMBLY WHILE THE SECOND ADULT IS INSIDE ATTACHING THE SCREWS.
- INSTALL SCREWS THROUGH PILOT HOLES IN PURLINS CLOSEST TO RIDGE.

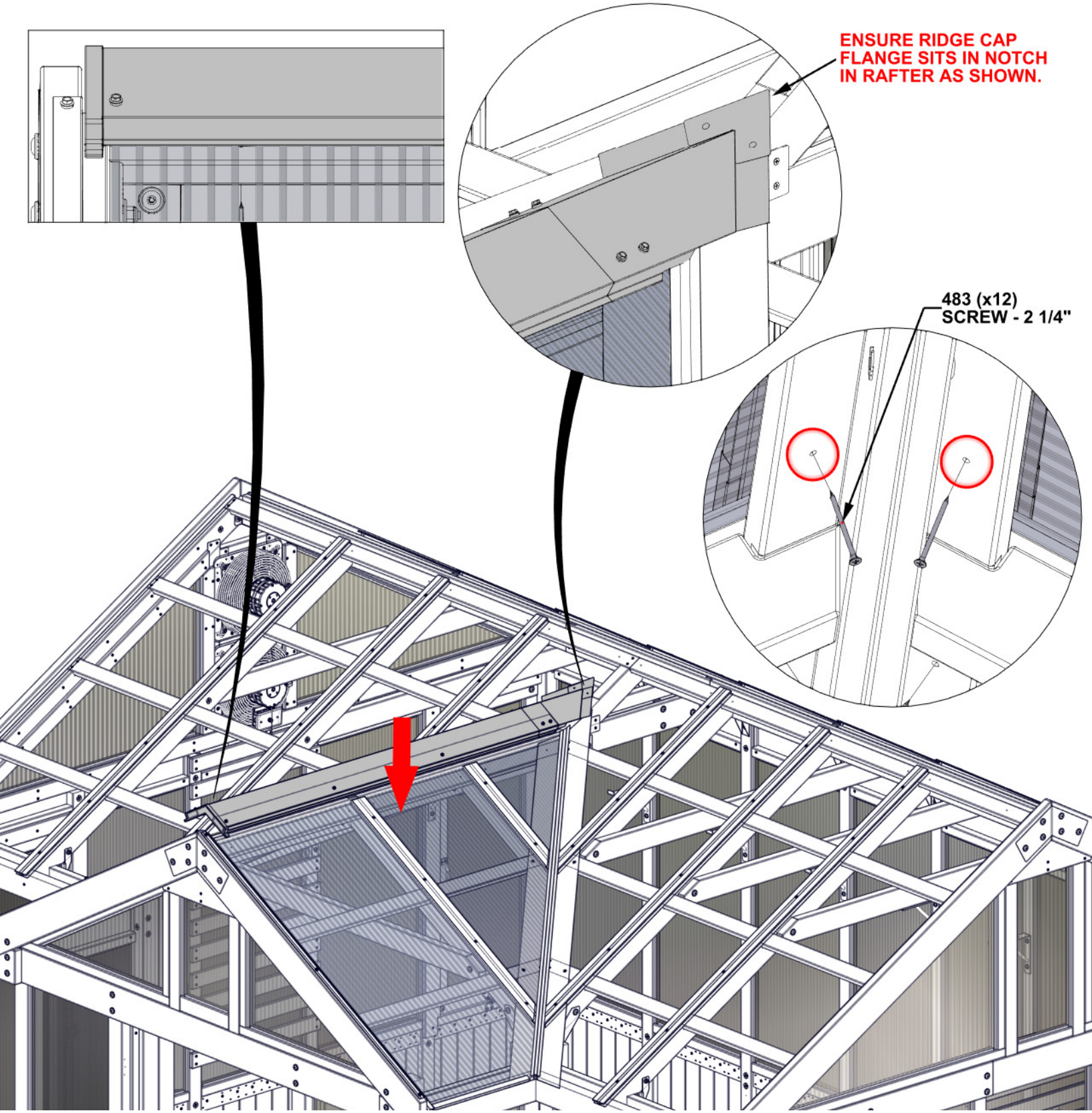

STEP 199 - ROOF ASSEMBLY

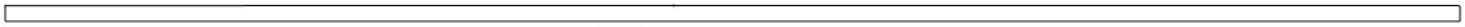

A6P01216 POLY CHANNEL
(x2)

REMOVE TAPE LINER ON POLY CHANNELS BEFORE INSTALLING.

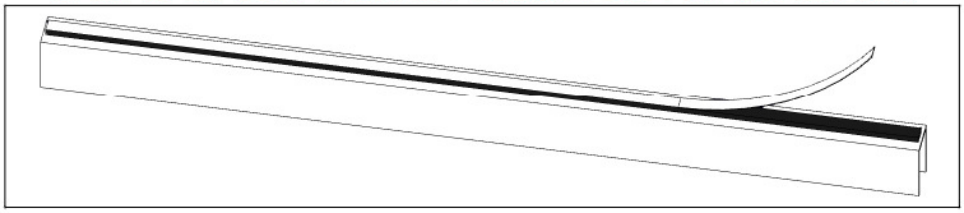

END OF POLY CHANNEL IS FLUSH WITH TOP OF PURLIN AS SHOWN.

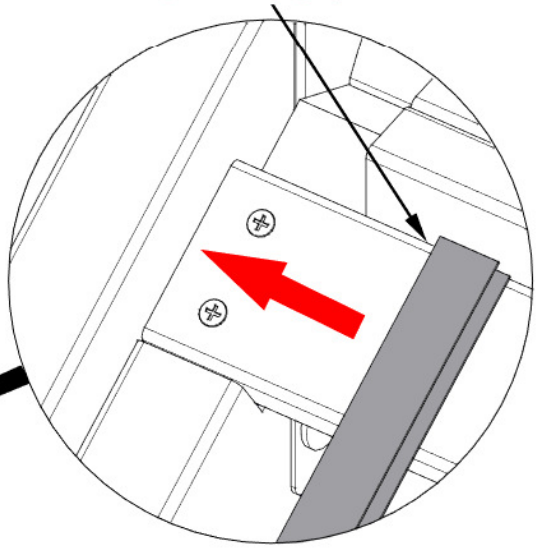

FIRMLY PRESS POLY CHANNEL AGAINST GABLE BOARD TO ENSURE ADHESION.

1216 (x1)
POLY CHANNEL

1216 (x1)
POLY CHANNEL

STEP 200 - ROOF ASSEMBLY

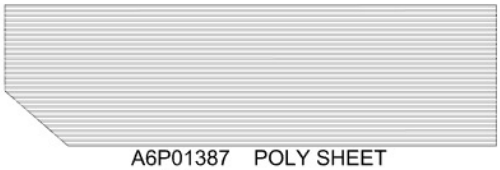

A6P01387 POLY SHEET
(x1)

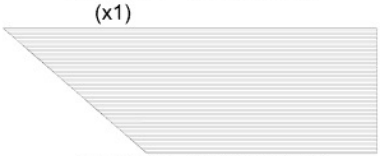

A6P01388 POLY SHEET
(x1)

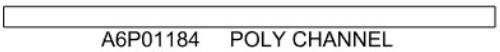

A6P01184 POLY CHANNEL
(x2)

A6P01410 POLY CHANNEL
(x1)

A6P00690 DUST SEAL TAPE

TO APPLY DUST SEAL TAPE AND POLY CHANNEL:
- **CUT ONE STRIP OF DUST SEAL TAPE THE SAME WIDTH AS THE POLY SHEET.**
- **CUT TWO MORE STRIPS OF DUST SEAL TAPE FOR BOTH SIDES OF BOTTOM OF POLY SHEET.**
- **WRAP DUST SEAL TAPE ALONG EDGE OF POLY SHEET WIDTH.**
- **AFTER TAPE IS SECURE, PUSH CHANNEL ON OVER THE TAPE, CENTERING ON THE POLY SHEET.**
- **REPEAT ON BOTH BOTTOM SIDES OF POLY SHEET.**

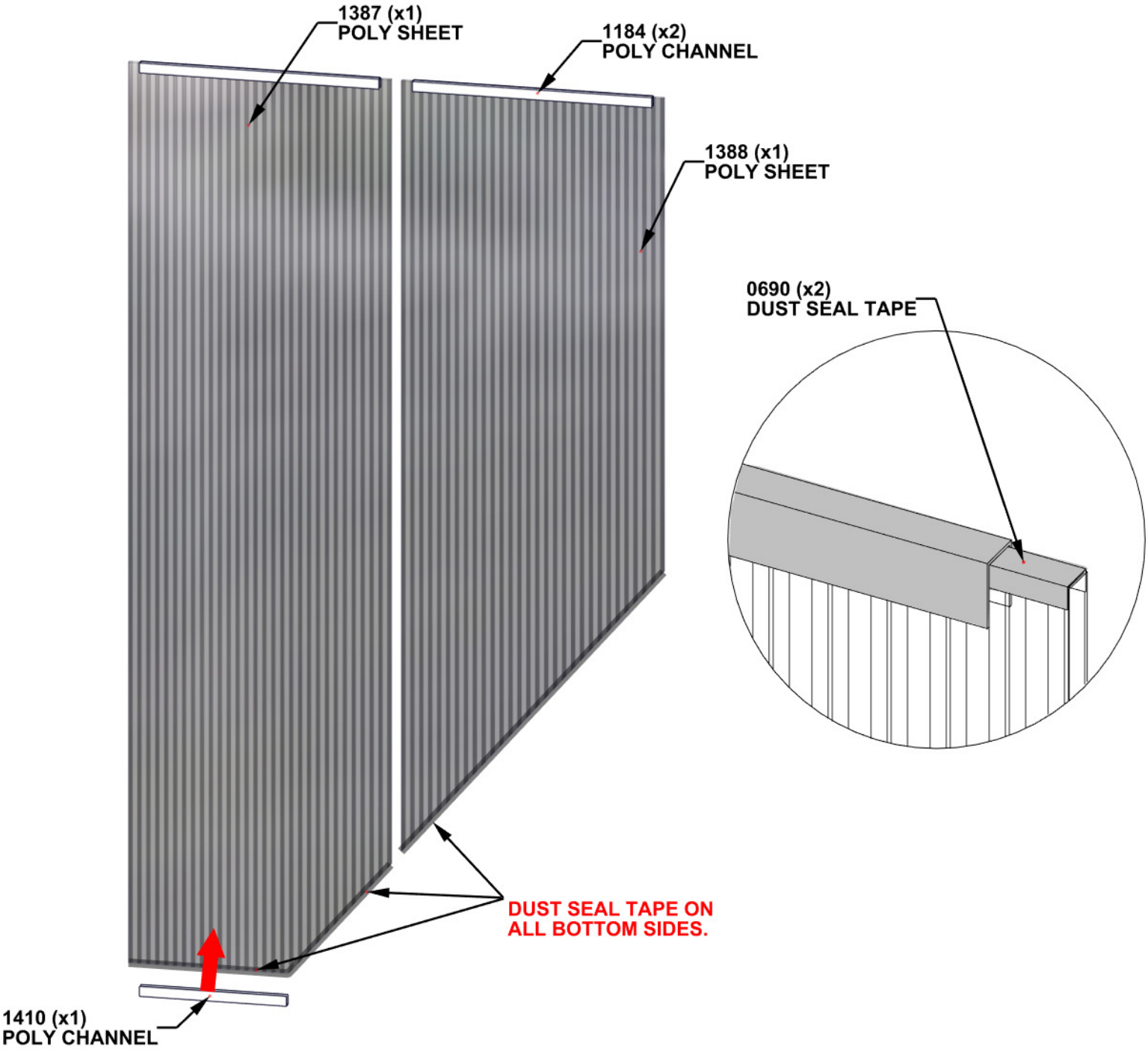

STEP 201 - ROOF ASSEMBLY

IMPORTANT!
- **ENSURE UV SIDE OF ROOF PANELS ARE FACING OUTSIDE.**
- **REMOVE THE PROTECTIVE FILM PRIOR TO INSTALLATION OF ROOF PANELS.**
- **SLIDE ROOF ASSEMBLIES INTO PLACE AS SHOWN.**
- **ENSURE ROOF ASSEMBLIES ARE ORIENTED CORRECTLY.**
- **POLY CHANNEL WILL BE FLUSH WITH END OF POLY SPLICE AT THE TOP.**
- **ANGLED SIDE OF ROOF ASSEMBLIES WILL SLIDE INTO POLY SPLICE IN VALLEY.**

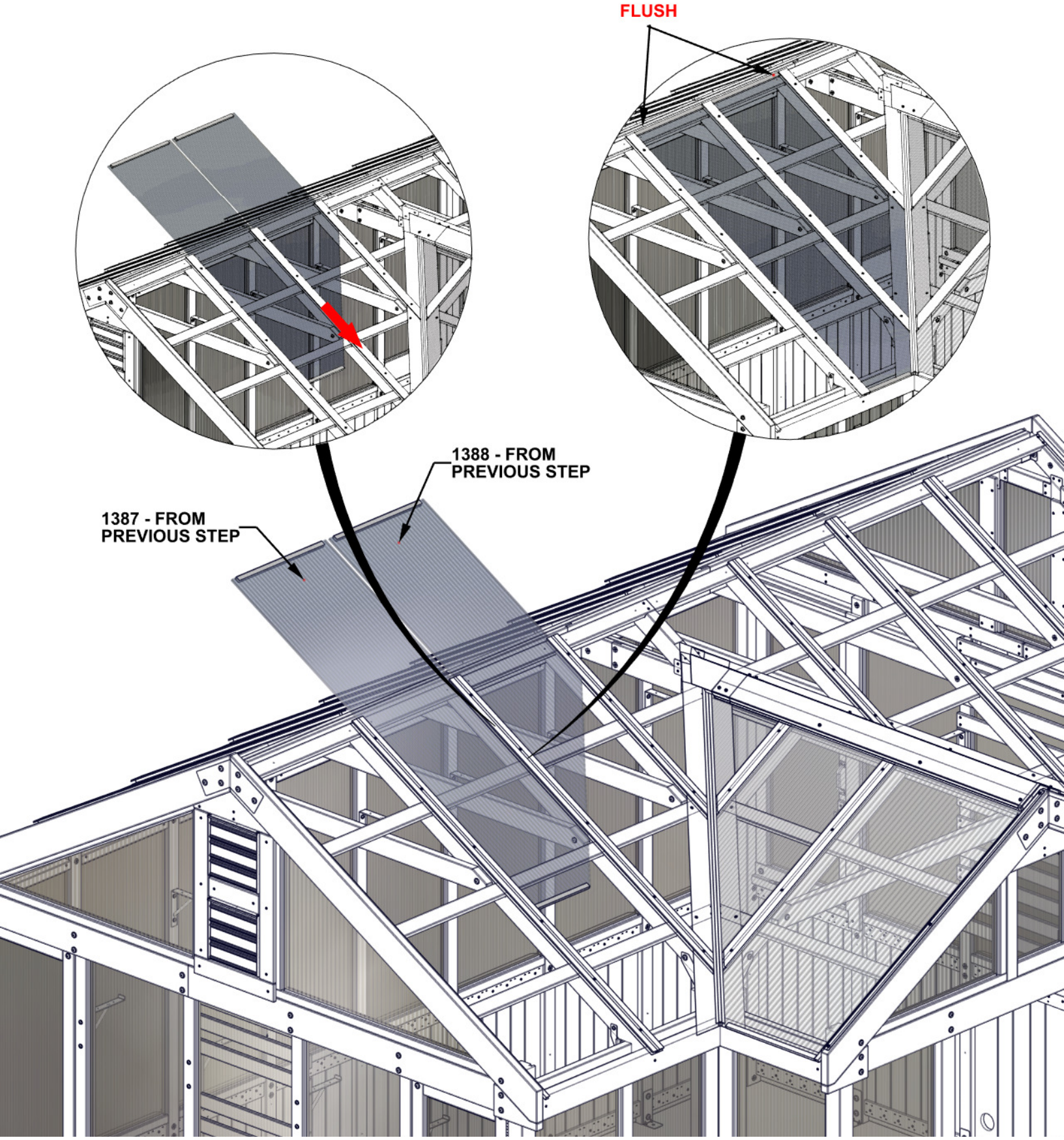

STEP 202 - ROOF ASSEMBLY

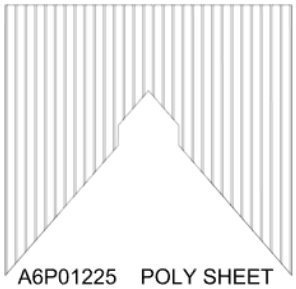

A6P01225 POLY SHEET
(x1)

A6P01408 POLY CHANNEL
(x1)

A6P00690 DUST SEAL TAPE

TO APPLY DUST SEAL TAPE AND POLY CHANNEL:
- **CUT ONE STRIP OF DUST SEAL TAPE THE SAME WIDTH AS THE POLY SHEET.**
- **CUT STRIPS TO COVER ALL SIDES OF INSIDE OF POLY SHEET .**
- **WRAP DUST SEAL TAPE ALONG EDGE OF POLY SHEET WIDTH.**
- **AFTER TAPE IS SECURE, PUSH CHANNEL ON OVER THE TAPE, CENTERING ON THE POLY SHEET.**
- **REPEAT ON ALL BOTTOM SIDES OF POLY SHEET.**

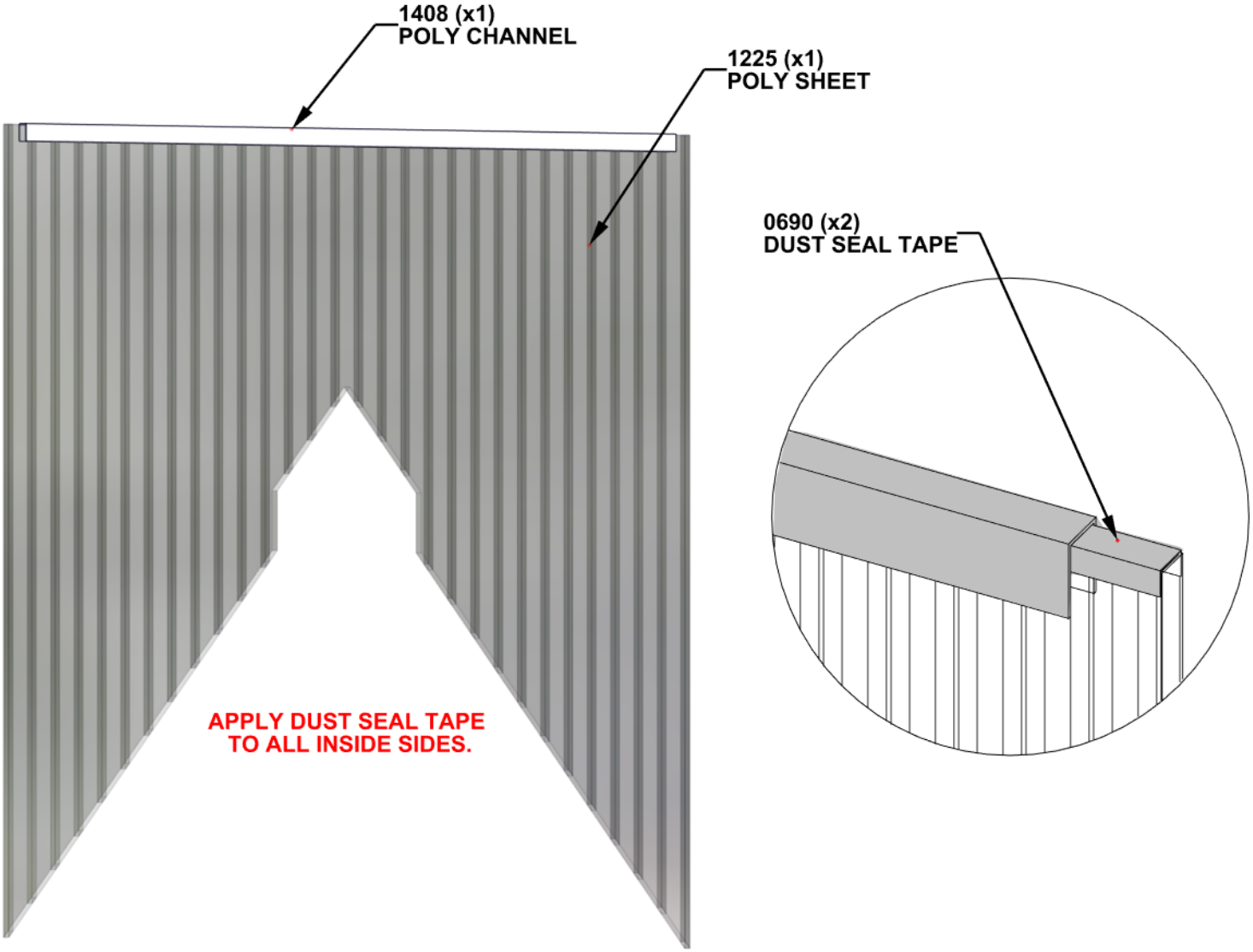

STEP 203 - ROOF ASSEMBLY

IMPORTANT!
- ENSURE UV SIDE OF ROOF PANELS ARE FACING OUTSIDE.
- REMOVE THE PROTECTIVE FILM PRIOR TO INSTALLATION OF ROOF PANELS.
- SLIDE ROOF ASSEMBLY INTO PLACE AS SHOWN.
- ENSURE ROOF ASSEMBLY IS ORIENTED CORRECTLY.
- POLY CHANNEL WILL BE FLUSH WITH END OF POLY SPLICE AT THE TOP.
- ANGLED SIDES OF ROOF ASSEMBLY WILL SLIDE INTO POLY SPLICES IN VALLEY.

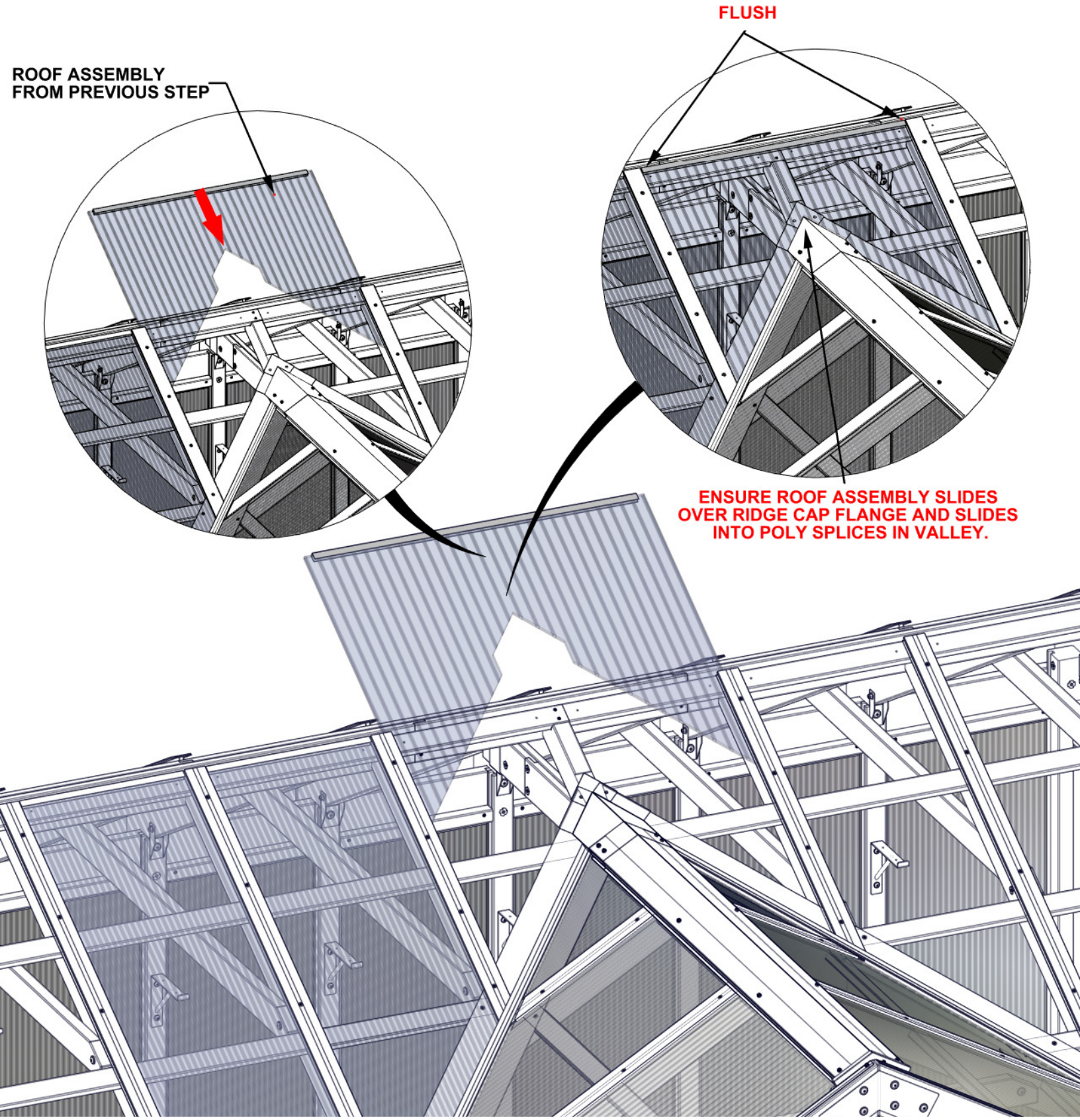

STEP 204 - ROOF ASSEMBLY

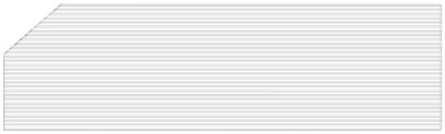

A6P01217 POLY SHEET
(x1)

A6P01184 POLY CHANNEL
(x2)

A6P01410 POLY CHANNEL
(x1)

A6P00690 DUST SEAL TAPE

A6P01224 POLY SHEET
(x1)

TO APPLY DUST SEAL TAPE AND POLY CHANNEL:
- **CUT ONE STRIP OF DUST SEAL TAPE THE SAME WIDTH AS THE POLY SHEET.**
- **CUT TWO MORE STRIPS OF DUST SEAL TAPE FOR BOTH SIDES OF BOTTOM OF POLY SHEET.**
- **WRAP DUST SEAL TAPE ALONG EDGE OF POLY SHEET WIDTH.**
- **AFTER TAPE IS SECURE, PUSH CHANNEL ON OVER THE TAPE, CENTERING ON THE POLY SHEET.**
- **REPEAT ON BOTH BOTTOM SIDES OF POLY SHEET.**

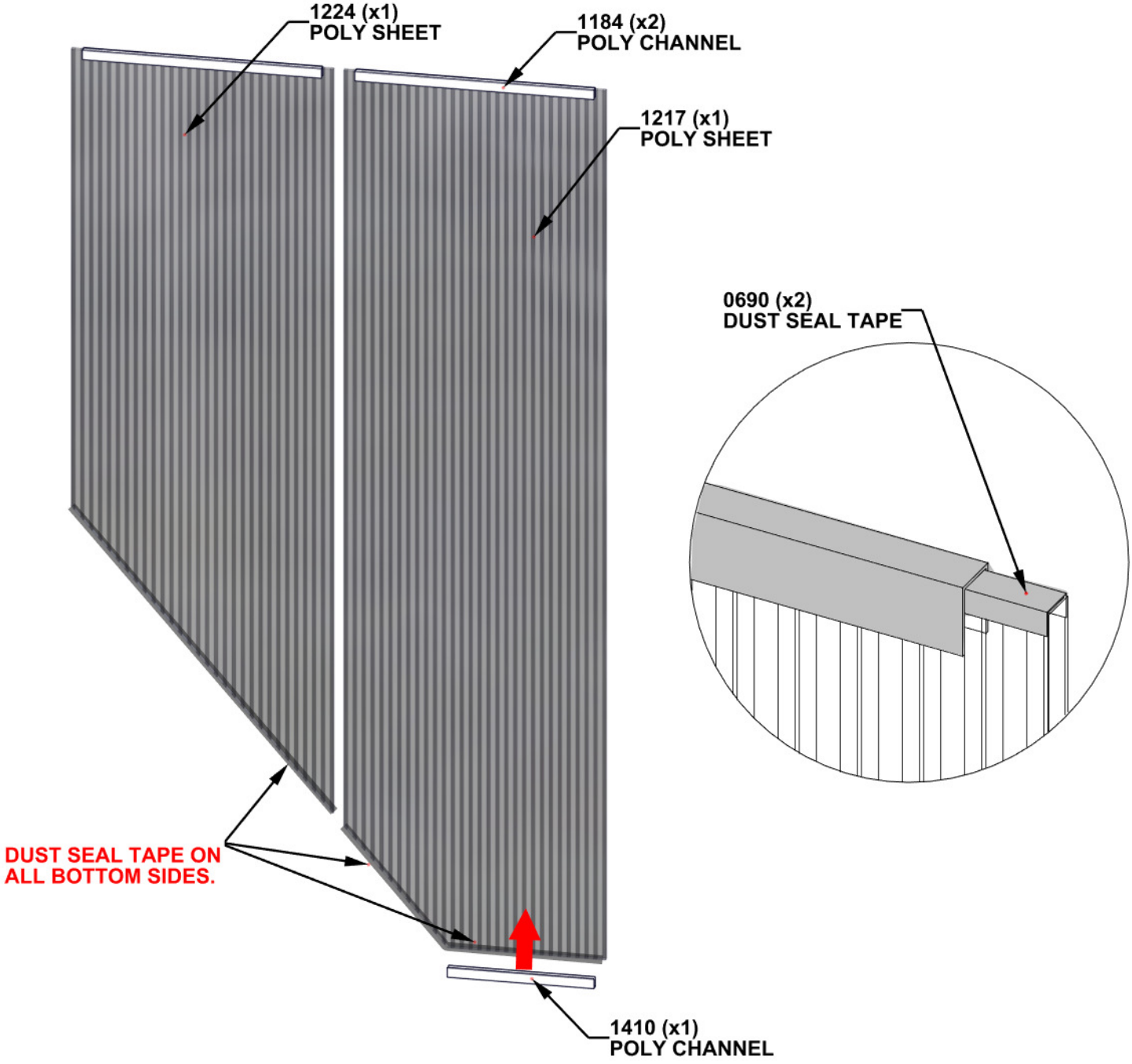

STEP 205 - ROOF ASSEMBLY

IMPORTANT!
- **ENSURE UV SIDE OF ROOF PANELS ARE FACING OUTSIDE.**
- **REMOVE THE PROTECTIVE FILM PRIOR TO INSTALLATION OF ROOF PANELS.**
- **SLIDE ROOF ASSEMBLIES INTO PLACE AS SHOWN.**
- **ENSURE ROOF ASSEMBLIES ARE ORIENTED CORRECTLY.**
- **POLY CHANNEL WILL BE FLUSH WITH END OF POLY SPLICE AT THE TOP.**
- **ANGLED SIDE OF ROOF ASSEMBLIES WILL SLIDE INTO POLY SPLICE IN VALLEY.**

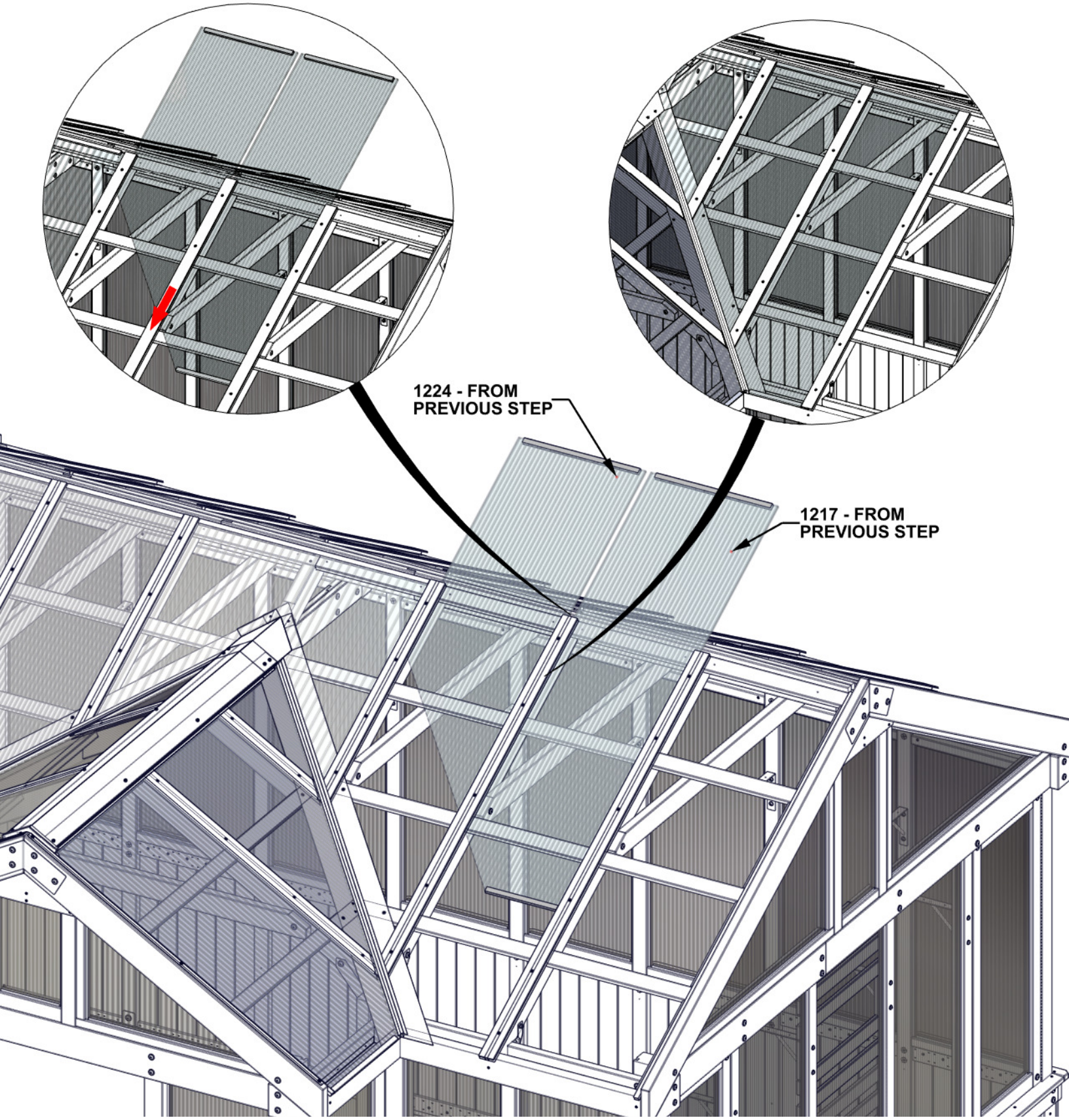

STEP 206 - ROOF ASSEMBLY

A6P01214 POLY SHEET
(x2)

A6P01215 POLY CHANNEL
(x4)

A6P00690 DUST SEAL TAPE

TO APPLY DUST SEAL TAPE AND POLY CHANNEL:
- CUT 2 STRIPS OF DUST SEAL TAPE THE SAME WIDTH AS THE POLY SHEET.
- WRAP DUST SEAL TAPE ALONG EDGE OF POLY SHEET WIDTH.
- AFTER TAPE IS SECURE, PUSH CHANNEL ON OVER THE TAPE, CENTERING ON THE POLY SHEET.
- REPEAT ON THE BOTTOM SIDE OF POLY SHEET.
- REPEAT FOR BOTH ROOF ASSEMBLIES.

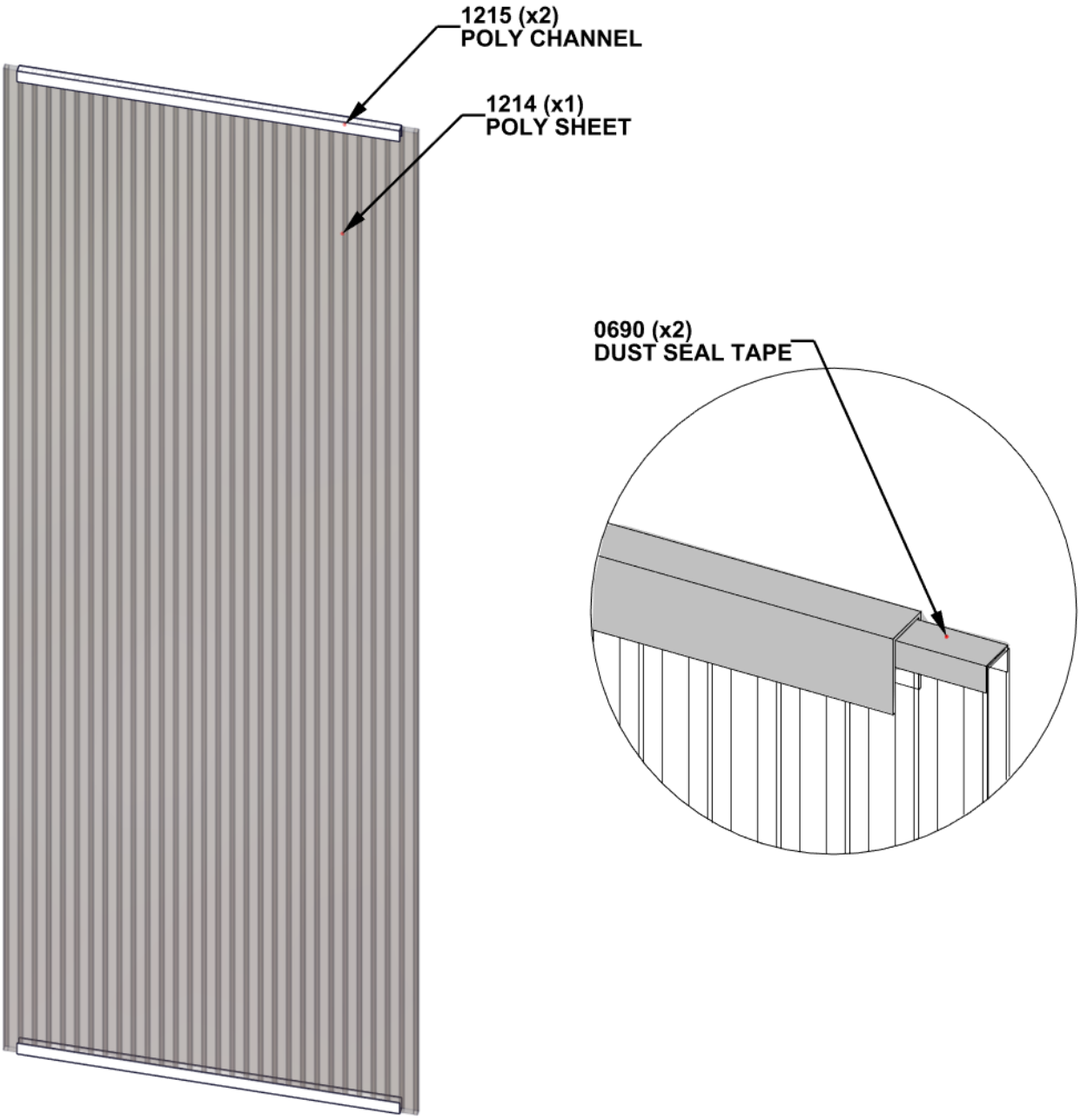

STEP 207 - ROOF ASSEMBLY

IMPORTANT!

- ENSURE UV SIDE OF ROOF PANELS ARE FACING OUTSIDE.
- REMOVE THE PROTECTIVE FILM PRIOR TO INSTALLATION OF ROOF PANELS.

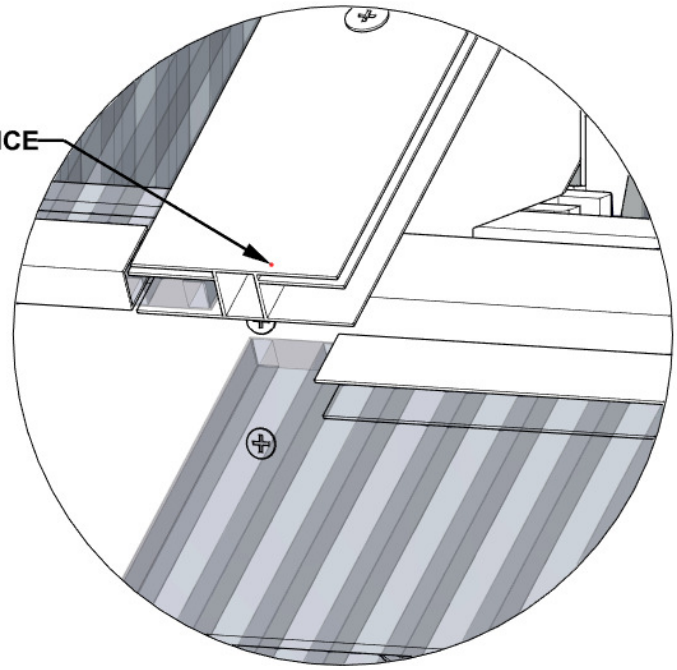

- SLIDE POLY SHEETS INTO POLY SHEET SPLICES.
- PUSH THE SHEETS UNTIL BOTTOM OF SHEET IS FLUSH WITH END OF POLY SHEET SPLICE.

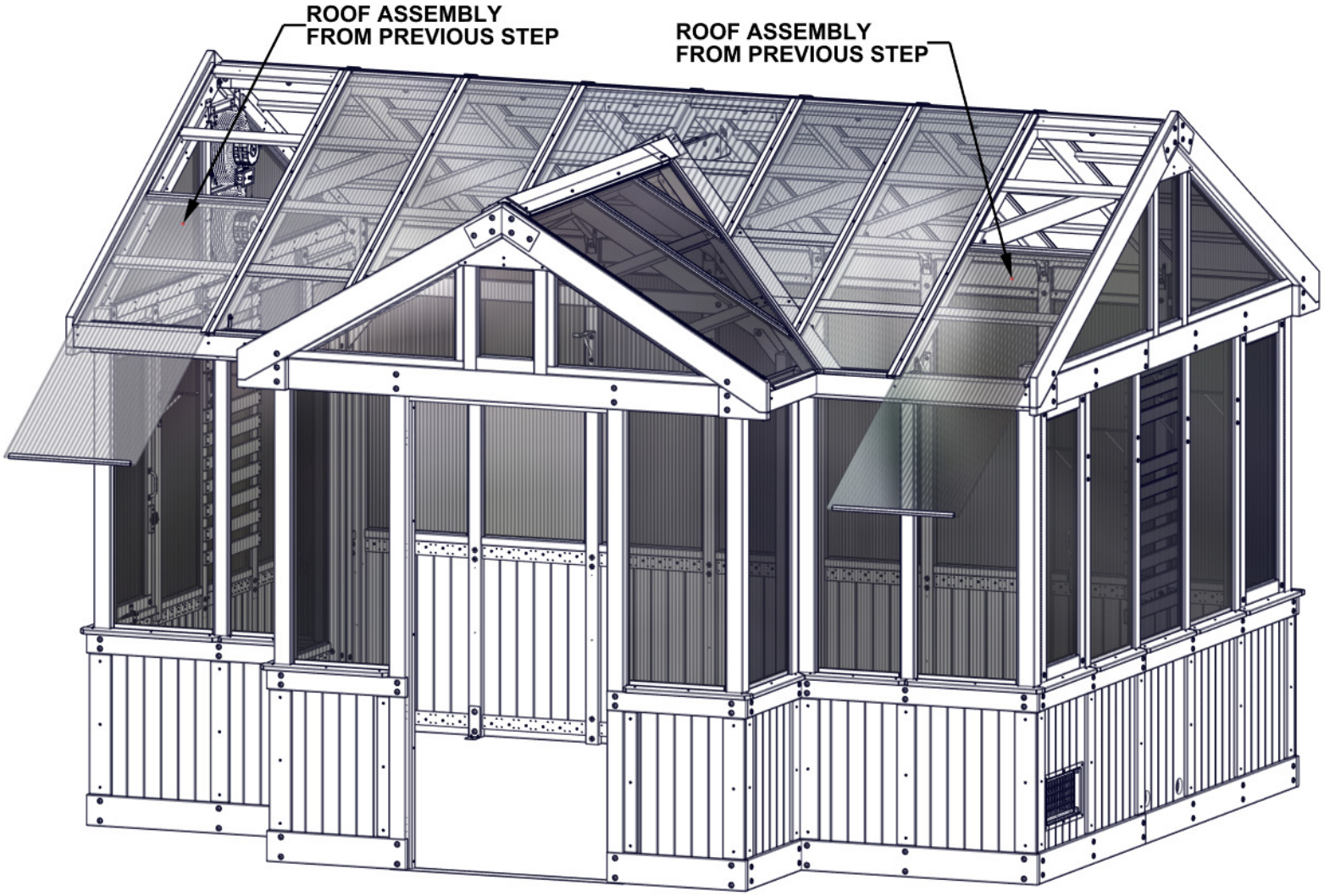

STEP 208 - ROOF ASSEMBLY

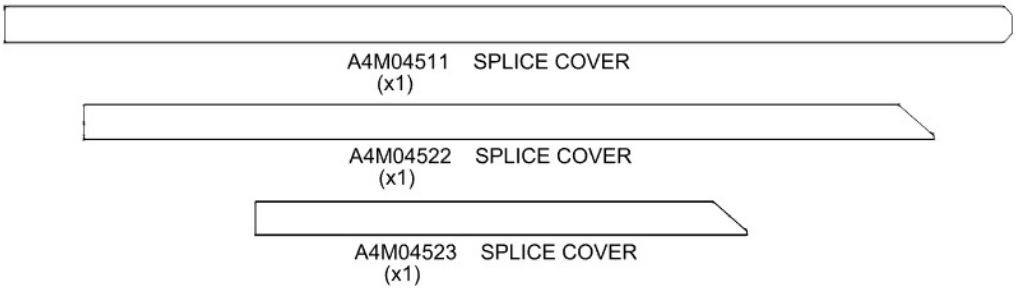

WARNING: GLOVES ARE RECOMMENDED WHEN HANDLING STEEL.

REMOVE BLUE FILM FROM SPLICE COVERS.

TABS OF SPLICE COVER SLIDE INTO POLY SPLICE AS SHOWN.

SLIDE SPLICE COVER DOWN UNTIL THE END IS FLUSH WITH THE TOP OF POLY SPLICE.

4522 (x1) SPLICE COVER

4523 (x1) SPLICE COVER

4511 (x1) SPLICE COVER

STEP 209 - ROOF ASSEMBLY

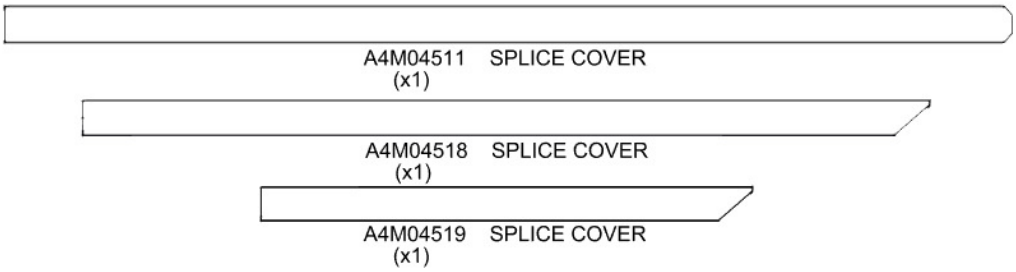

WARNING: GLOVES ARE RECOMMENDED WHEN HANDLING STEEL.

REMOVE BLUE FILM FROM SPLICE COVERS.

TABS OF SPLICE COVER SLIDE INTO POLY SPLICE AS SHOWN.

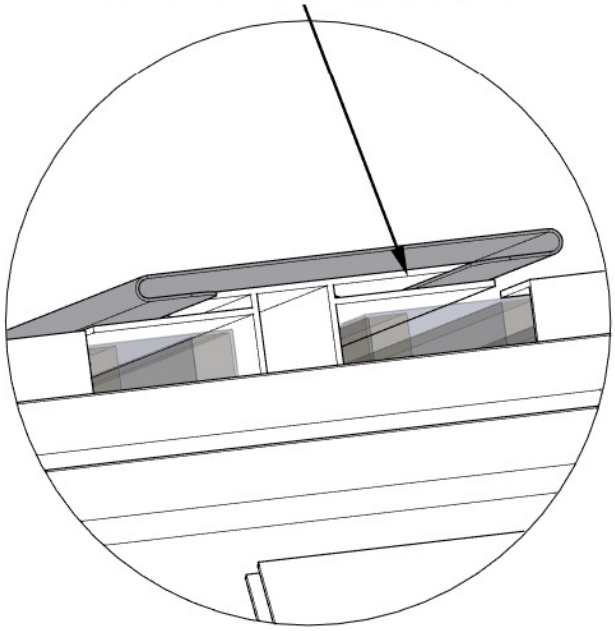

SLIDE SPLICE COVER DOWN UNTIL THE END IS FLUSH WITH THE TOP OF POLY SPLICE.

4518 (x1) SPLICE COVER

4519 (x1) SPLICE COVER

4511 (x1) SPLICE COVER

STEP 210A - ROOF ASSEMBLY

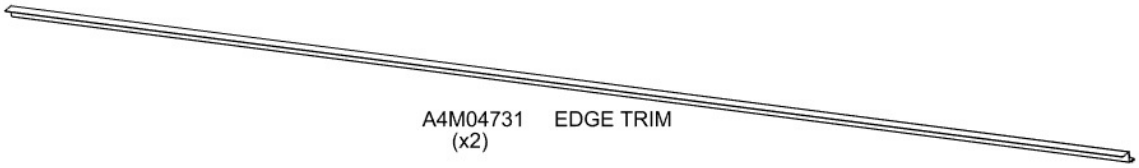

WARNING: GLOVES ARE RECOMMENDED WHEN HANDLING STEEL.

REMOVE BLUE FILM FROM TRIM.

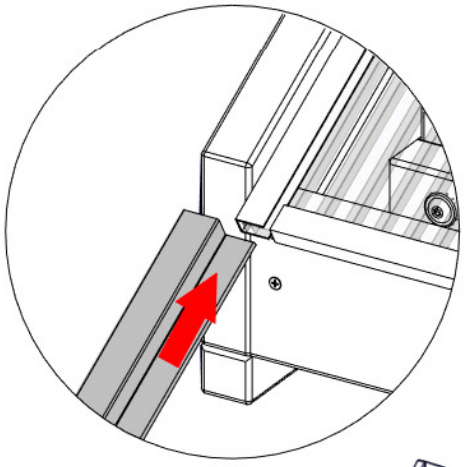

SLIDE TRIM INTO PLACE WITH POLY CHANNEL FITTING INTO OPEN HEM. ENSURE CORRECT ORIENTATION AS SHOWN.

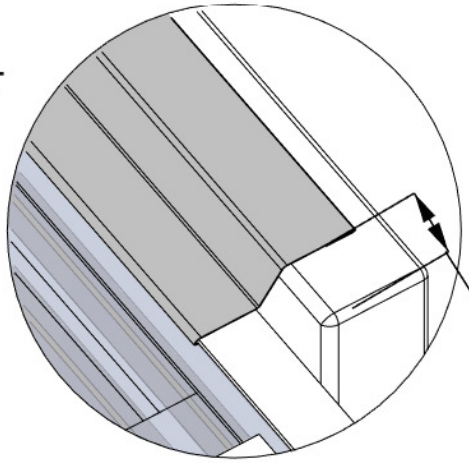

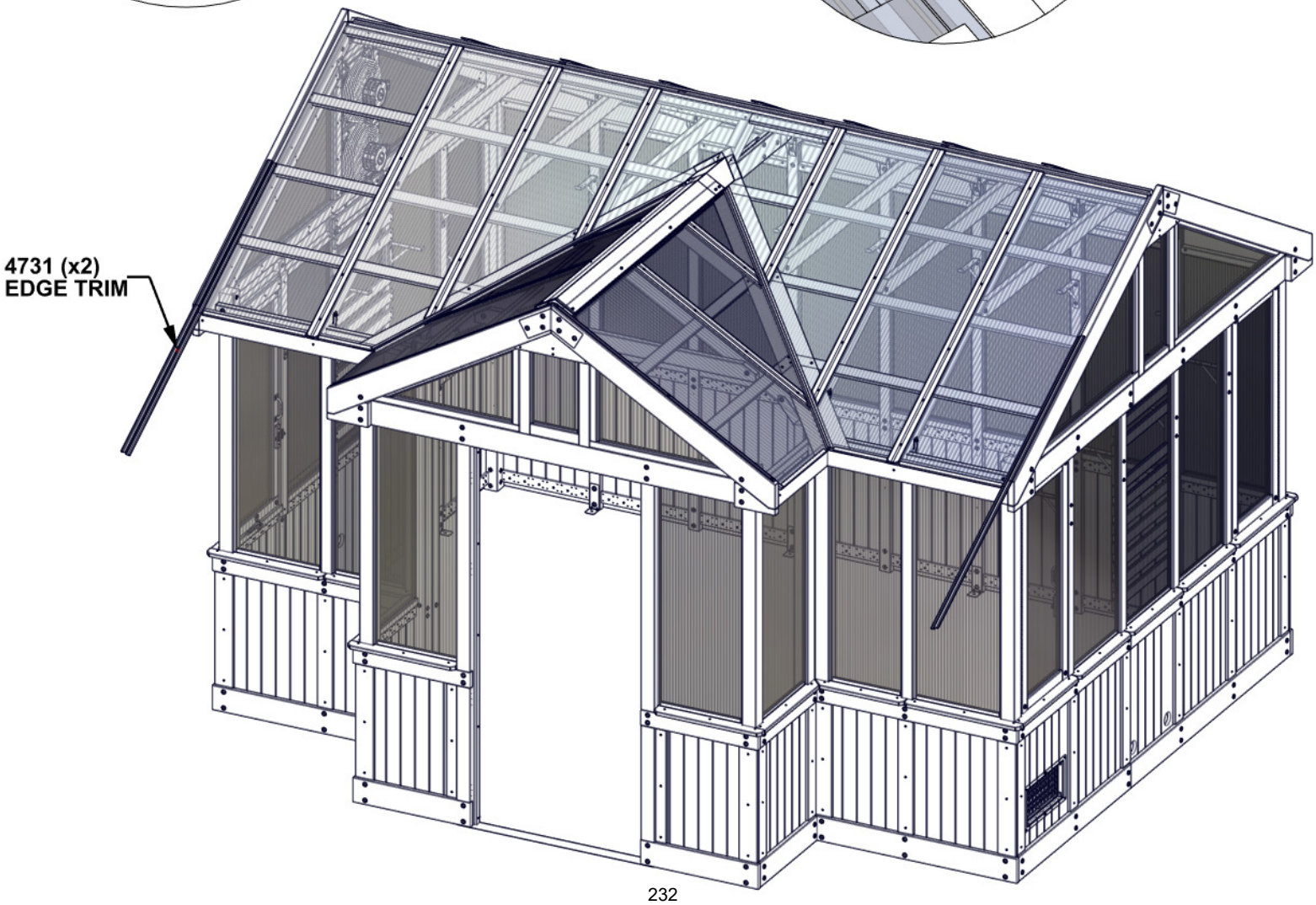

STEP 210B - ROOF ASSEMBLY

QTY	PART NUMBER	DESCRIPTION
8	H101117	SCREW WOODGRIP 10-16x3/4" BLK

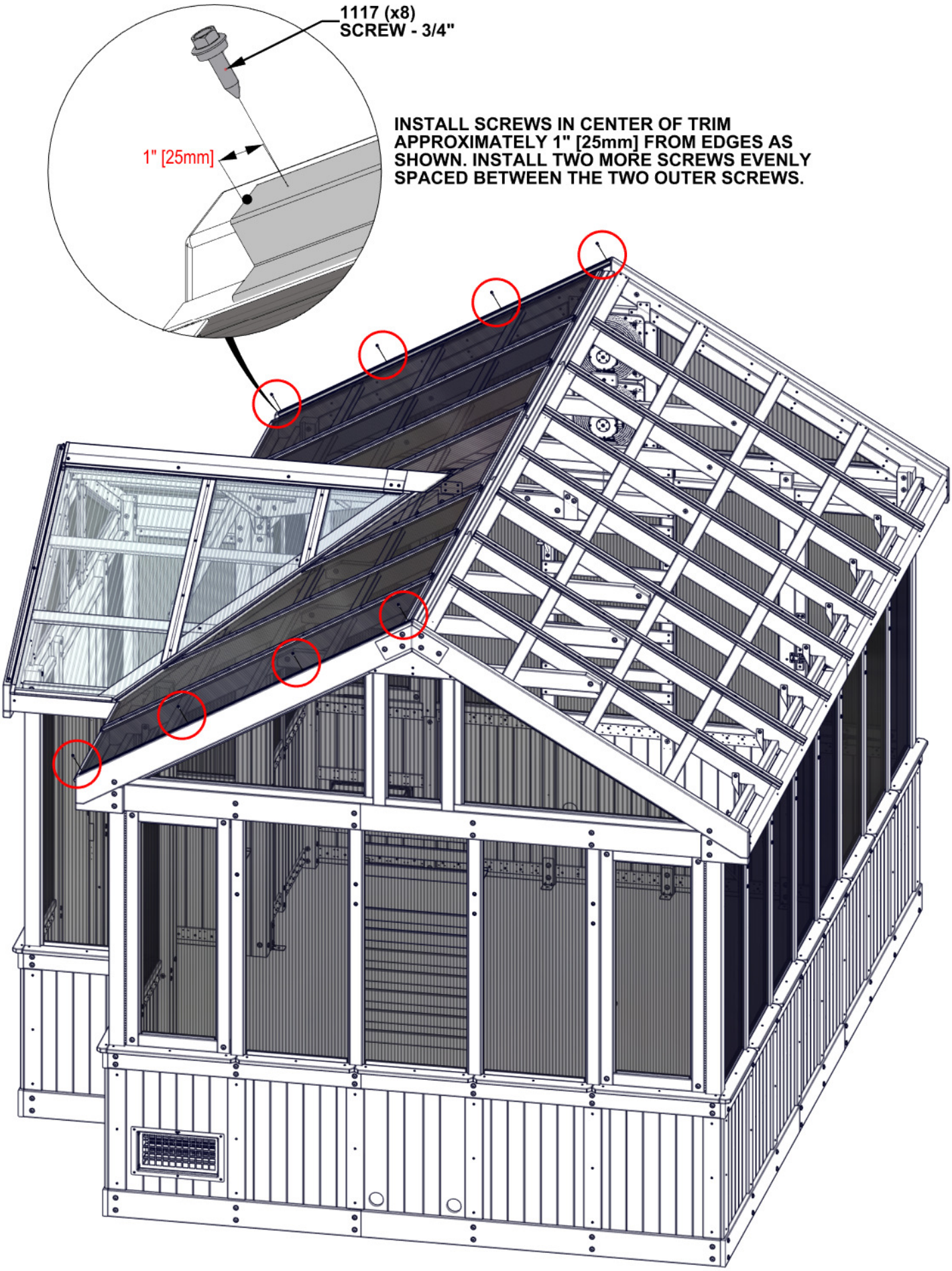

STEP 211A - ROOF ASSEMBLY

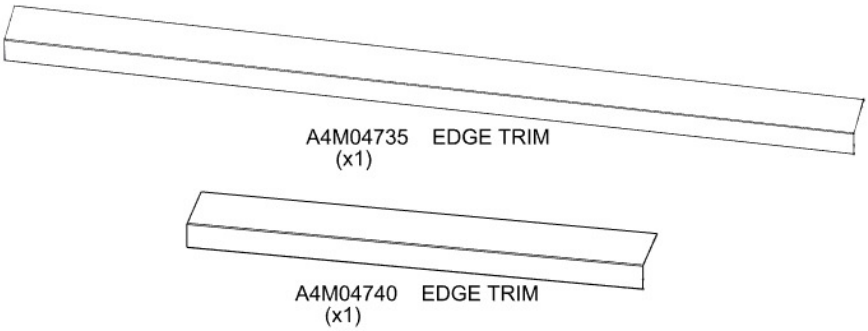

A6P01531 10 OZ SILICONE TUBE
(x1)

H101464 CAULK GUN
(x1)

WARNING: GLOVES ARE RECOMMENDED WHEN HANDLING STEEL.

REMOVE BLUE FILM FROM EDGE TRIM AND EDGE TRIM SPLICE FIRST.

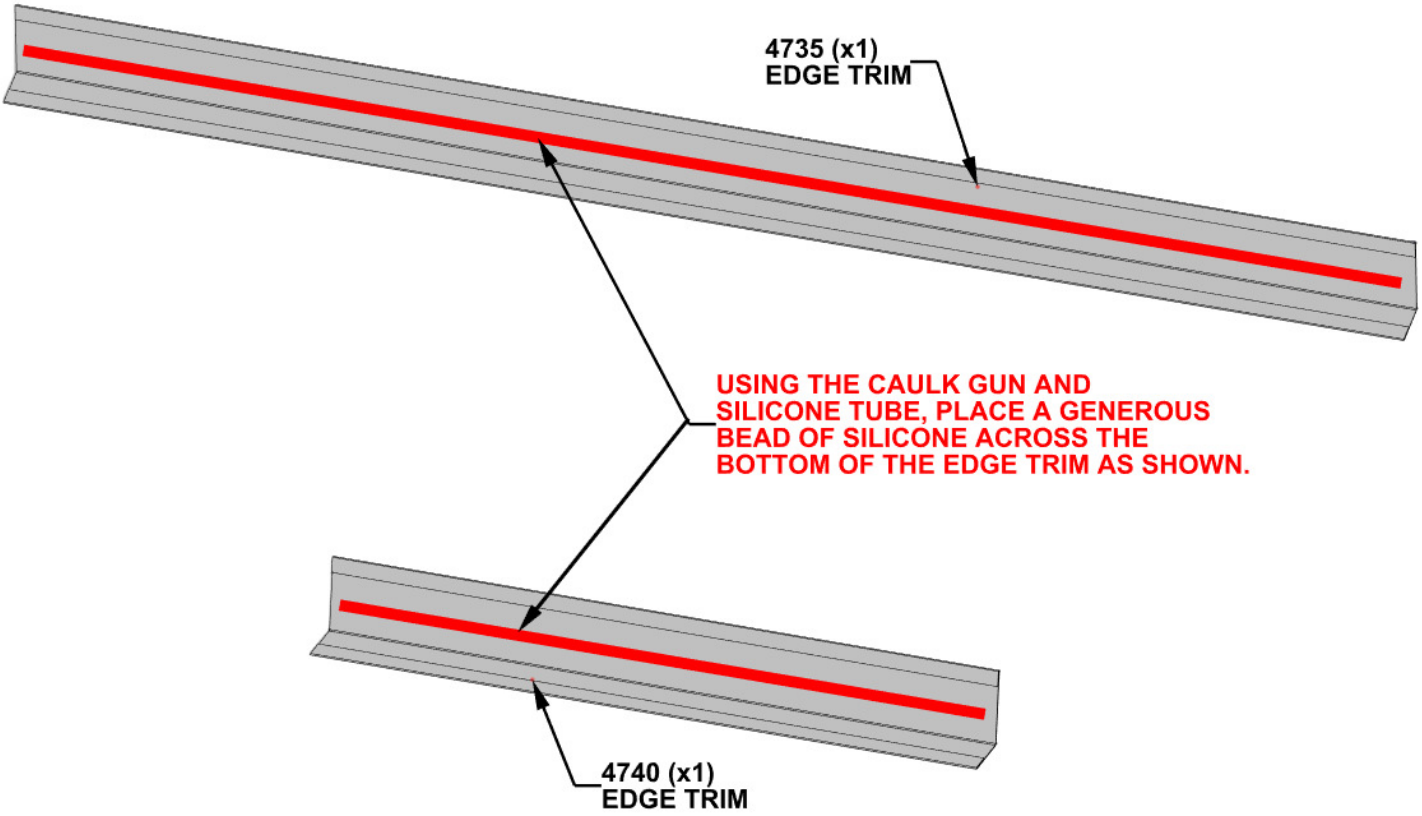

STEP 211B - ROOF ASSEMBLY

QTY	PART NUMBER	DESCRIPTION
5	H101206	SCREW WOODGRIP 10-16x1-1/4"

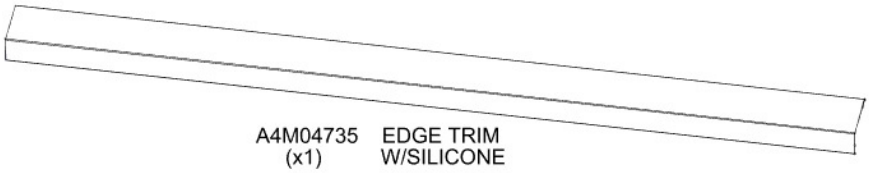

A4M04735 (x1) EDGE TRIM W/SILICONE

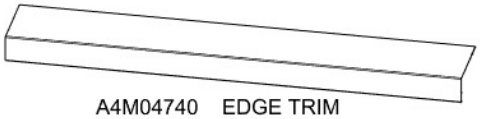

A4M04740 (x1) EDGE TRIM W/SILICONE

WARNING: GLOVES ARE RECOMMENDED WHEN HANDLING STEEL.

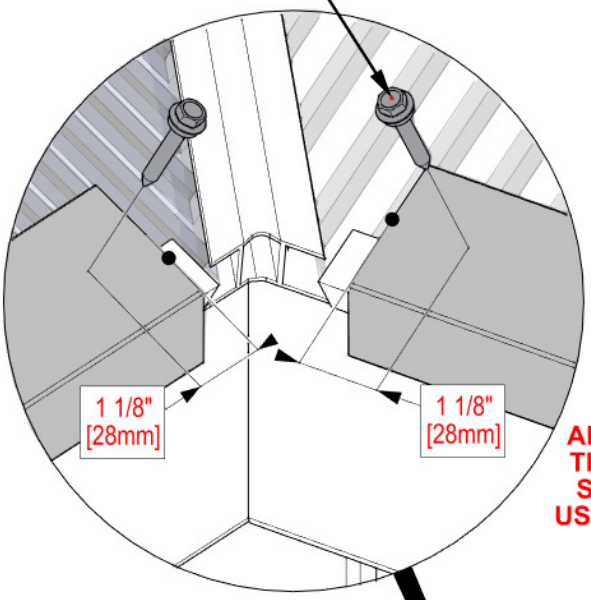

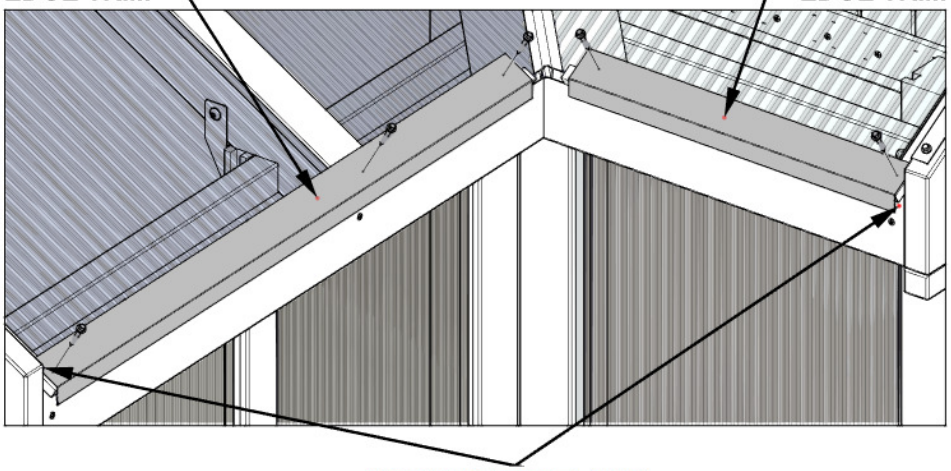

ALIGN EDGE TRIM AS NOTED, THEN DRILL PILOT HOLES AT SHOWN SCREW LOCATIONS USING AN 1/8" [3mm] DRILL BIT.

EDGE TRIM IS FLUSH WITH GABLE ENDS.

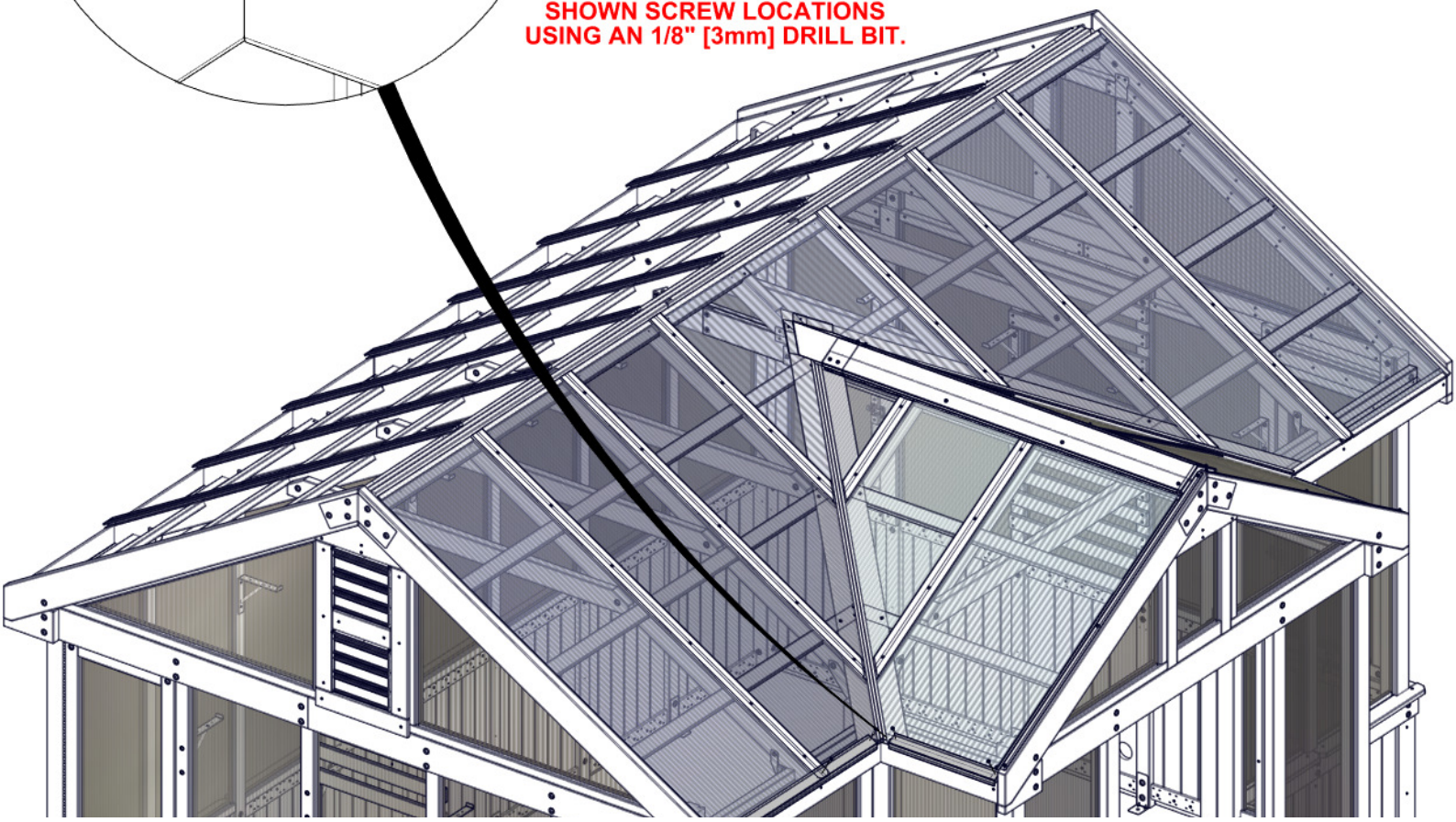

STEP 211C - ROOF ASSEMBLY

A6P01531 10 OZ SILICONE TUBE
(x1)

H101464 CAULK GUN
(x1)

USING THE CAULK GUN AND SILICONE TUBE, PLACE A GENEROUS BEAD OF SILICONE ACROSS THE TOP OF THE EDGE TRIM AS SHOWN.

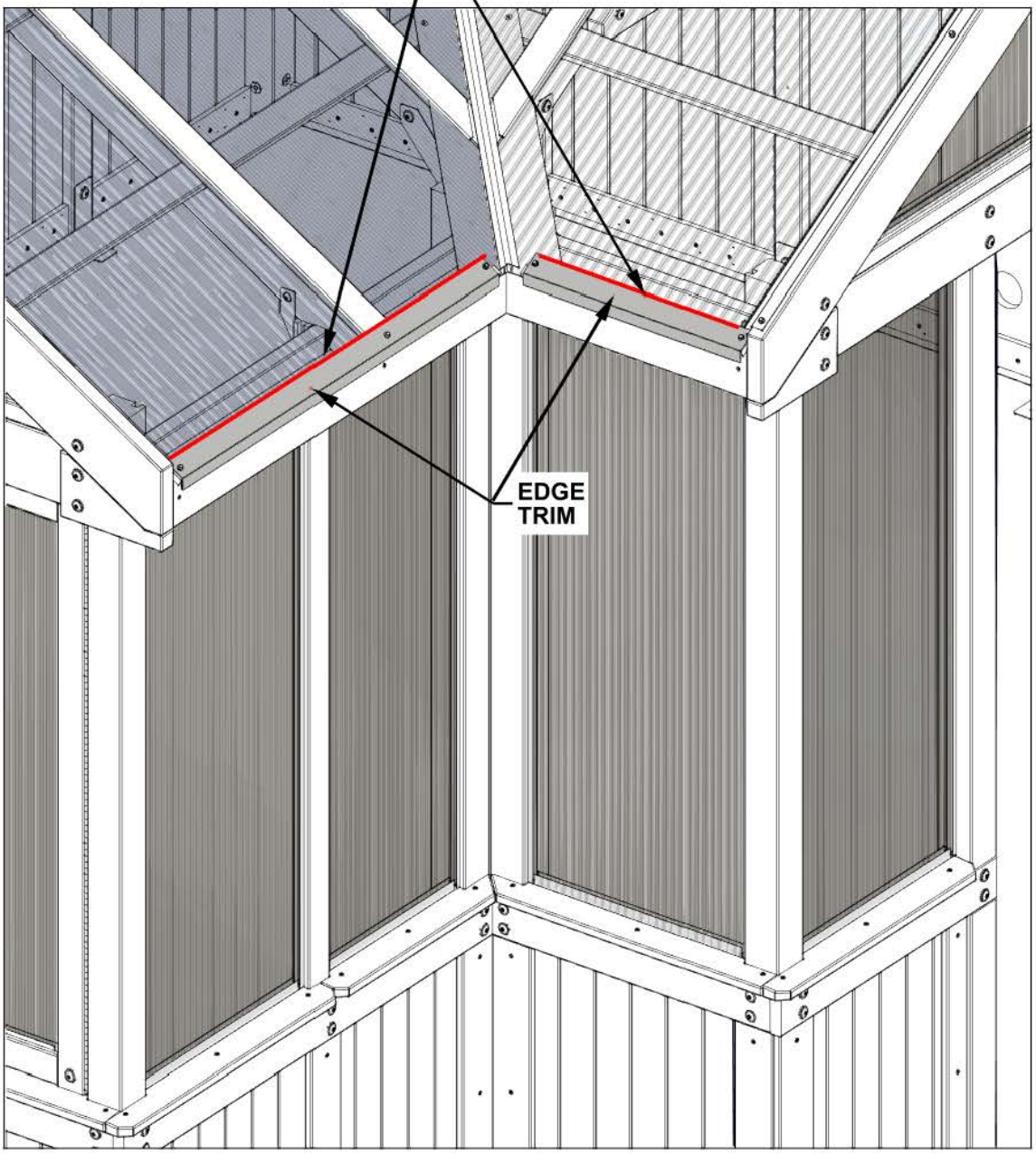

STEP 212A - ROOF ASSEMBLY

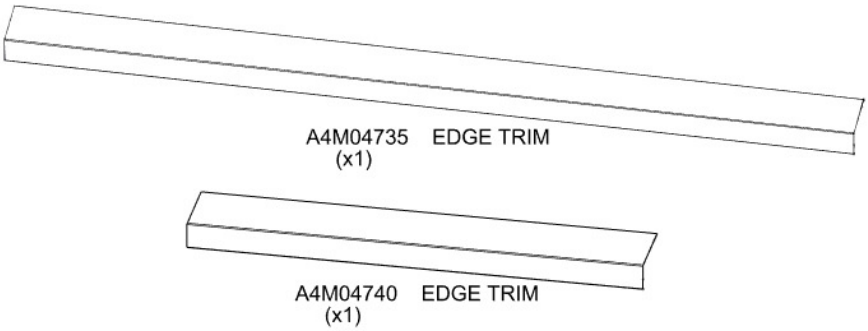

A6P01531 10 OZ SILICONE TUBE
(x1)

H101464 CAULK GUN
(x1)

WARNING: GLOVES ARE RECOMMENDED WHEN HANDLING STEEL.

REMOVE BLUE FILM FROM EDGE TRIM AND EDGE TRIM SPLICE FIRST.

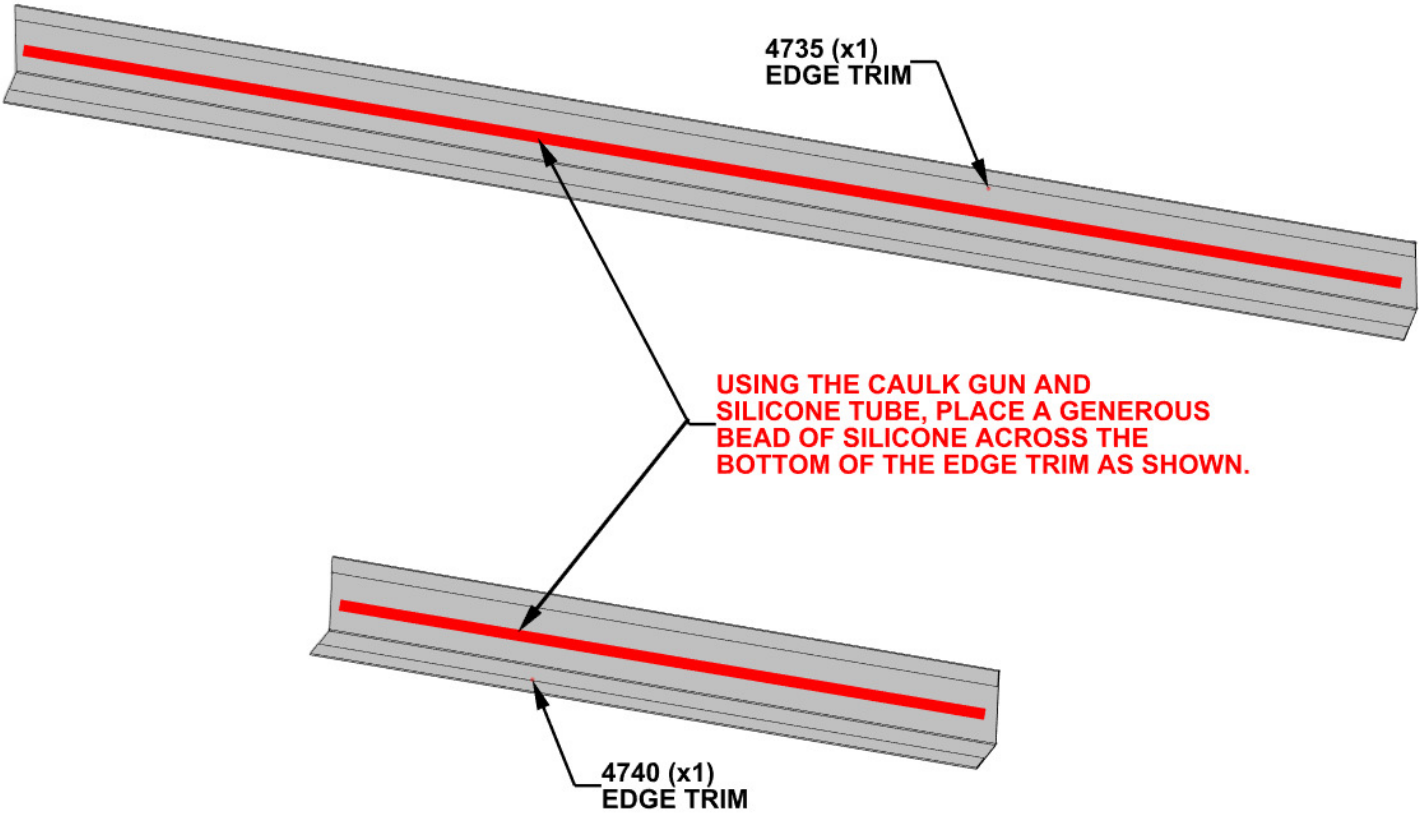

STEP 212B - ROOF ASSEMBLY

QTY	PART NUMBER	DESCRIPTION
5	H101206	SCREW WOODGRIP 10-16x1-1/4"

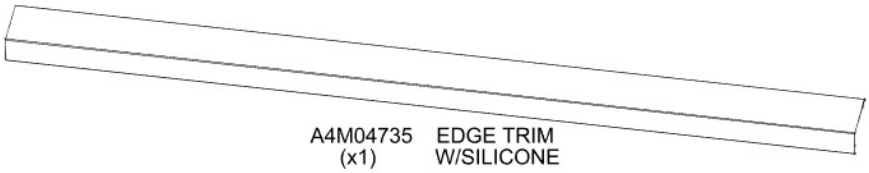

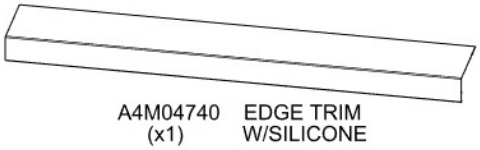

WARNING: GLOVES ARE RECOMMENDED WHEN HANDLING STEEL.

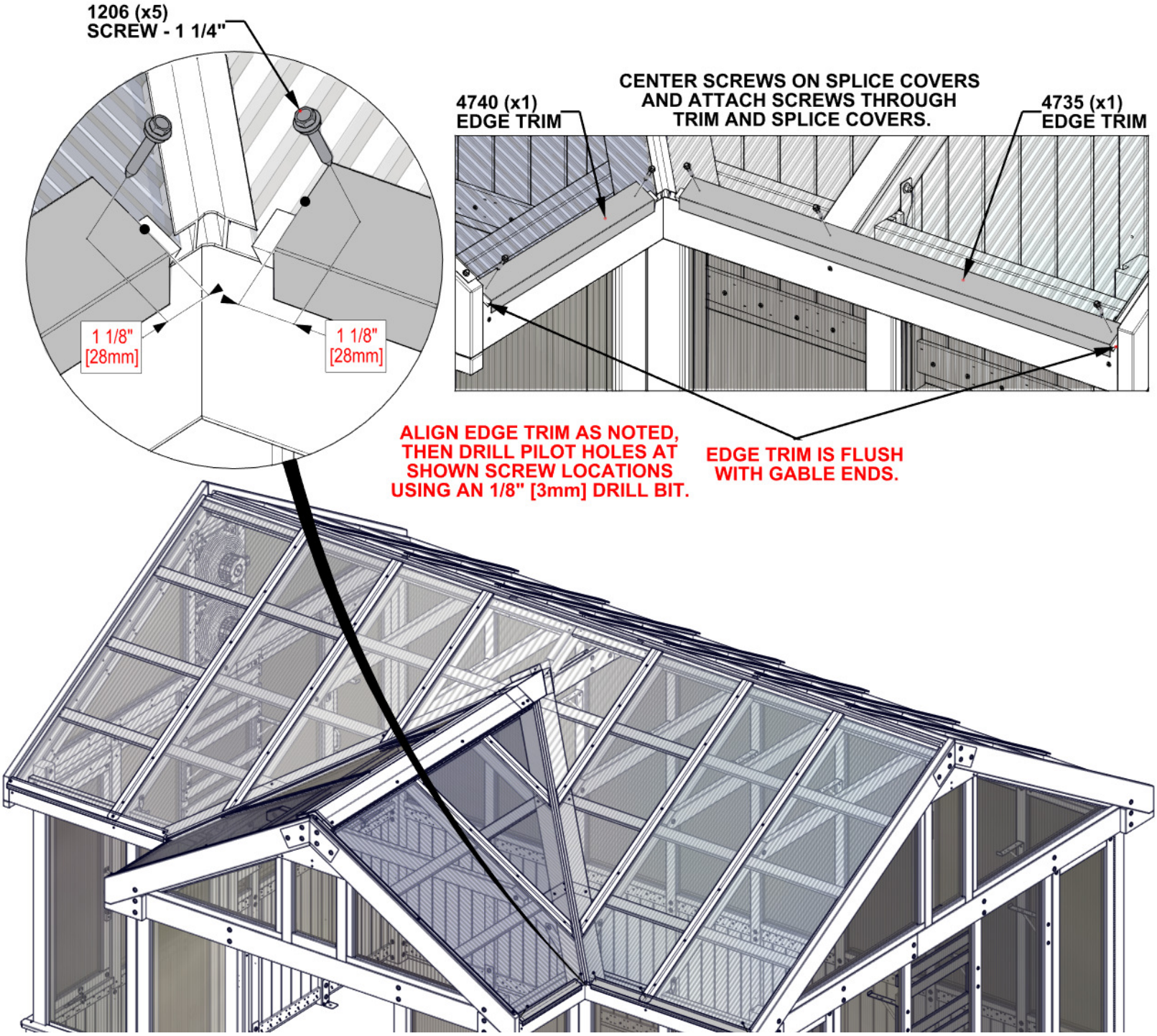

STEP 212C - ROOF ASSEMBLY

A6P01531 (x1) 10 OZ SILICONE TUBE

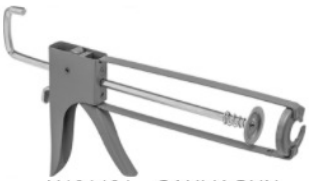

H101464 (x1) CAULK GUN

USING THE CAULK GUN AND SILICONE TUBE, PLACE A GENEROUS BEAD OF SILICONE ACROSS THE TOP OF THE EDGE TRIM AS SHOWN.

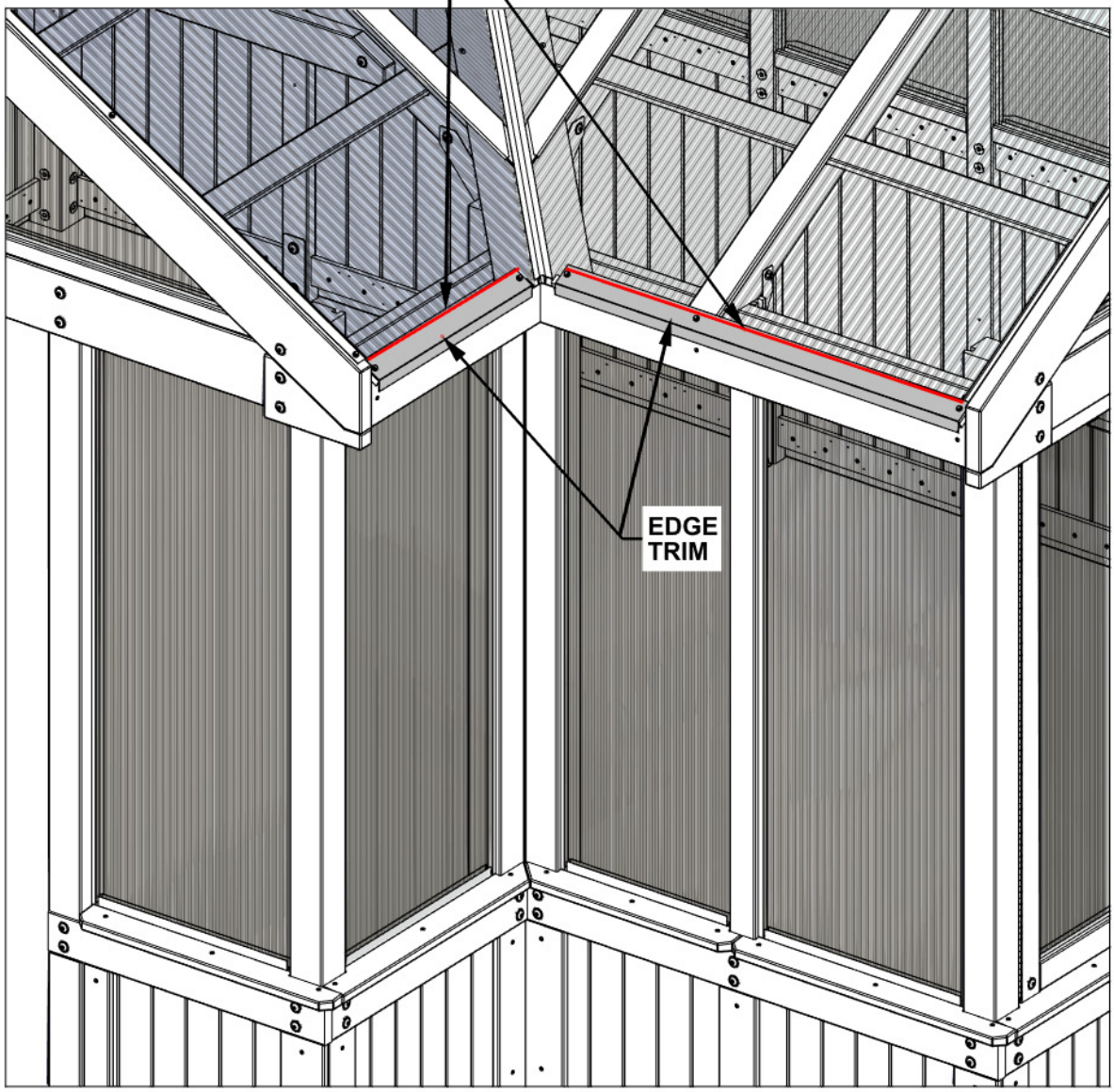

STEP 213 - ROOF ASSEMBLY

A6P01002 FLASHING TAPE

A6P01531 (x1) 10 OZ SILICONE TUBE

H101464 (x1) CAULK GUN

- BEFORE REMOVING TAPE BACKING, CUT TWO STRIPS APPROXIMATELY 69 1/4" [1760mm] LONG.
- TRIM TOP END AT AN ANGLE TO FIT FLUSH AGAINST RIDGE CAP FLANGE.
- TRIM BOTTOM END AS SHOWN TO BE FLUSH WITH END OF ROOF PANELS.
- DO NOT REMOVE TAPE BACKING ALL AT ONCE, REMOVE AS TAPE IS APPLIED DOWN THE VALLEY OF THE GREENHOUSE.
- AS TAPE IS INSTALLED. CENTER TAPE IN THE VALLEY AS SHOWN.
- TAPE IS VERY STICKY AND CAN ONLY BE APPLIED ONCE.

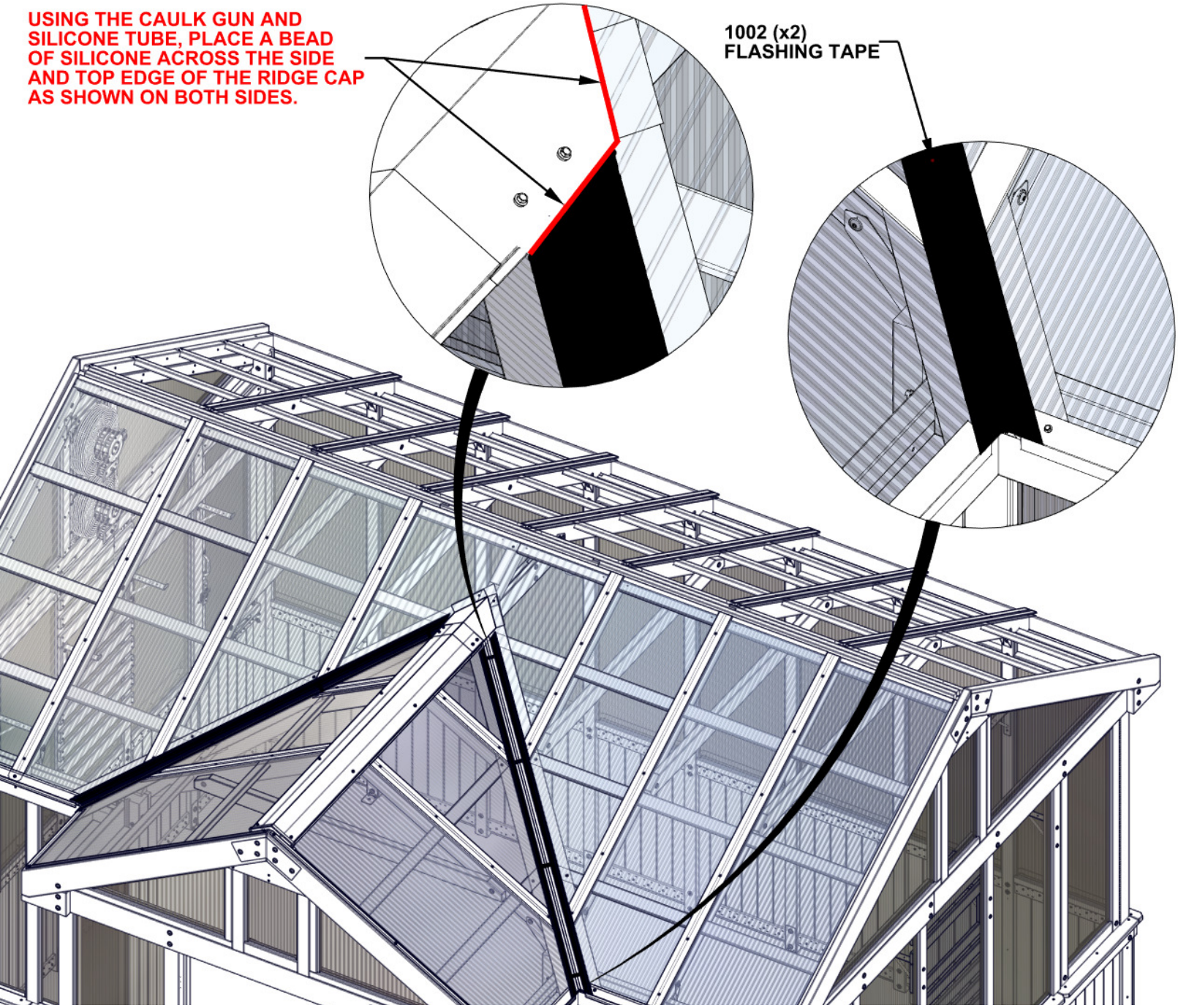

STEP 214 - ROOF ASSEMBLY

QTY	PART NUMBER	DESCRIPTION
8	H101206	SCREW WOODGRIP 10-16x1-1/4"

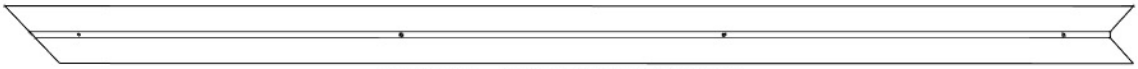

A4M04741 VALLEY SPLICE COVER
(x1)

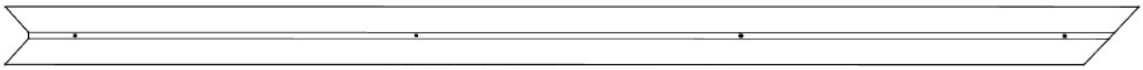

A4M04742 VALLEY SPLICE COVER
(x1)

- CENTER VALLEY SPLICE COVERS IN VALLEYS AS SHOWN.
- INSERT SCREWS INTO THROUGH HOLES TO ATTACH.

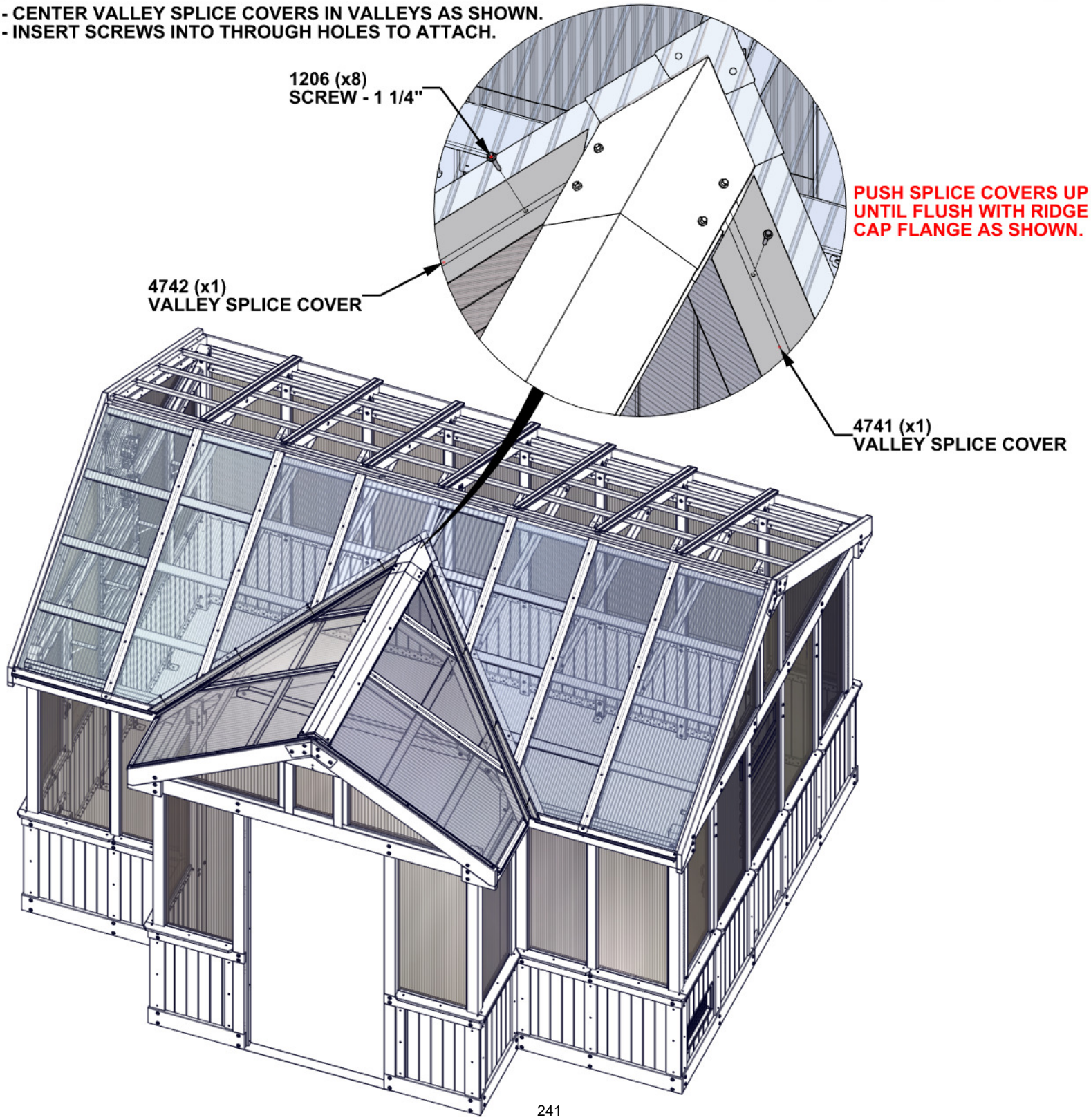

STEP 215 - ROOF ASSEMBLY

A6P01216 POLY CHANNEL
(x2)

REMOVE TAPE LINER ON POLY CHANNELS BEFORE INSTALLING.

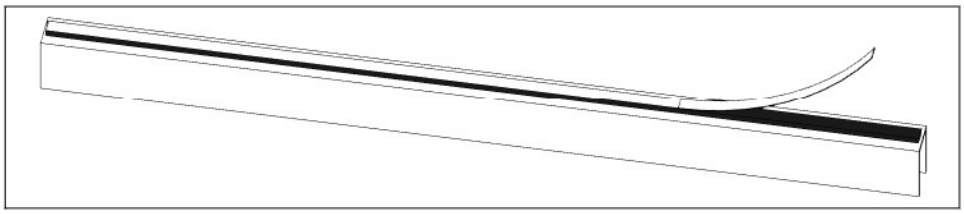

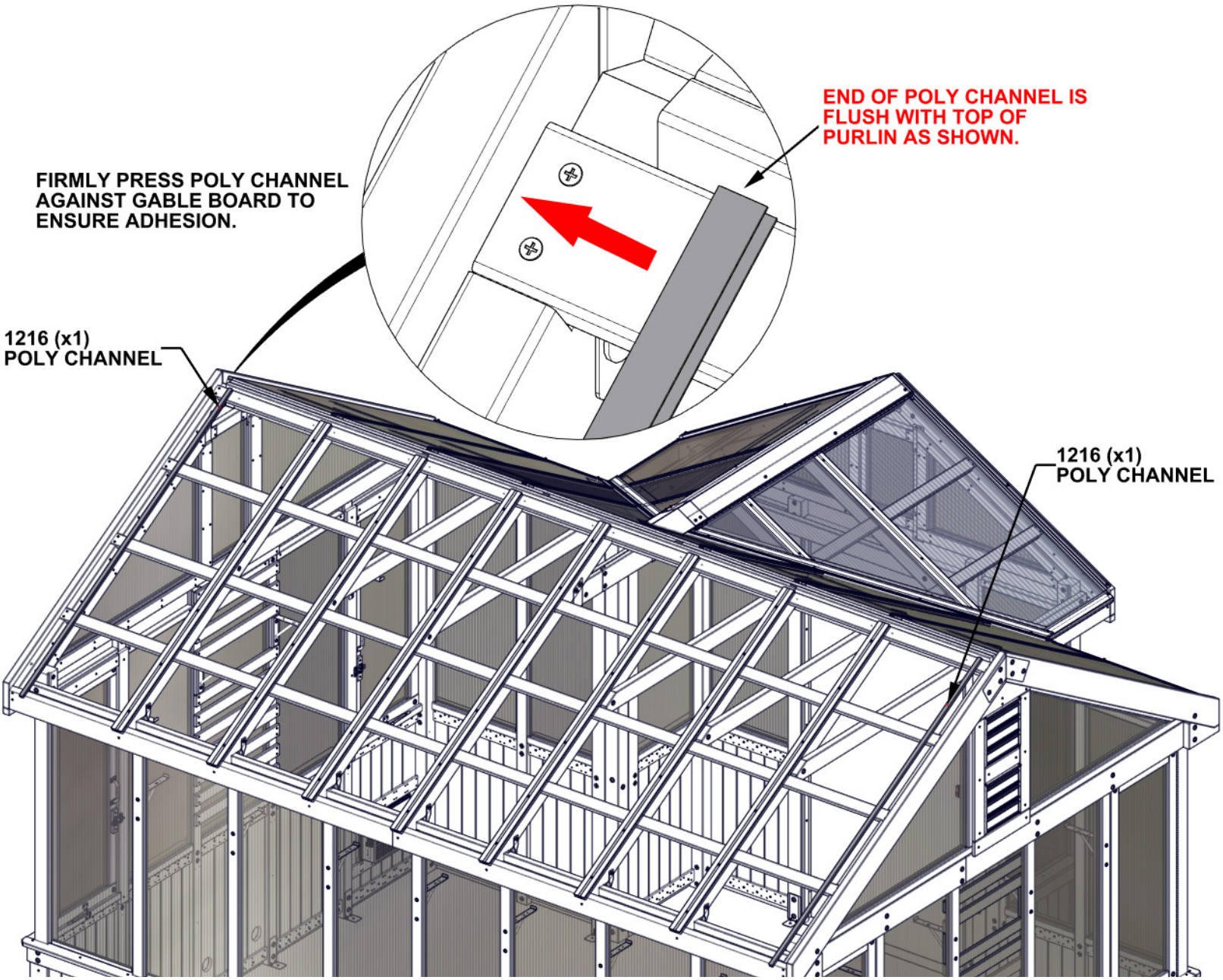

STEP 216 - ROOF ASSEMBLY

A6P01213 POLY SHEET
(x2)

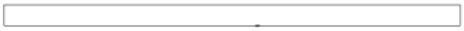

A6P01205 POLY CHANNEL
(x4)

A6P00690 DUST SEAL TAPE

TO APPLY DUST SEAL TAPE AND POLY CHANNEL:
- CUT 2 STRIPS OF DUST SEAL TAPE THE SAME WIDTH AS THE POLY SHEET.
- WRAP DUST SEAL TAPE ALONG EDGE OF POLY SHEET WIDTH.
- AFTER TAPE IS SECURE, PUSH CHANNEL ON OVER THE TAPE, CENTERING ON THE POLY SHEET.
- REPEAT ON THE BOTTOM SIDE OF POLY SHEET.
- REPEAT FOR BOTH ROOF ASSEMBLIES.

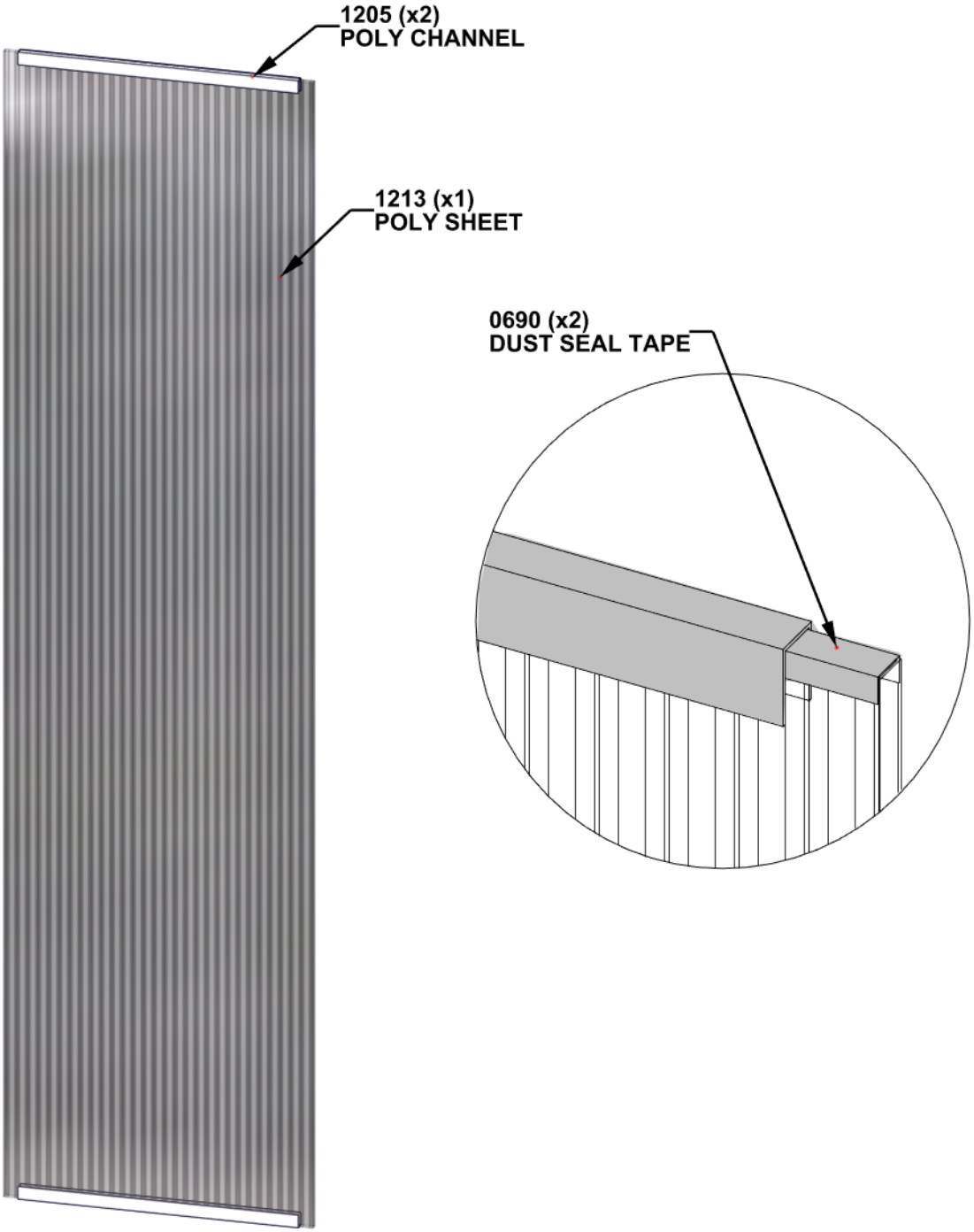

STEP 217 - ROOF ASSEMBLY

IMPORTANT!

- ENSURE UV SIDE OF ROOF PANELS ARE FACING OUTSIDE.
- REMOVE THE PROTECTIVE FILM PRIOR TO INSTALLATION OF ROOF PANELS.

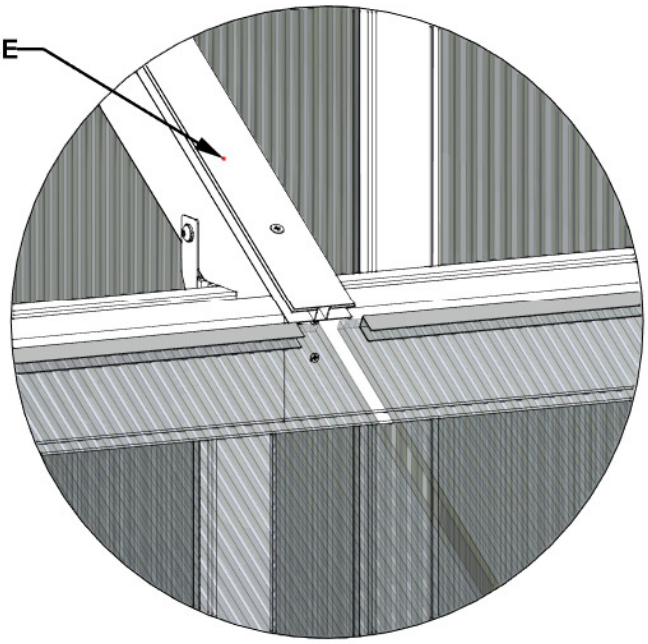

- SLIDE POLY SHEETS INTO POLY SHEET SPLICES.
- PUSH THE SHEETS UNTIL BOTTOM OF SHEET IS FLUSH WITH POLY SHEET SPLICE AS SHOWN.

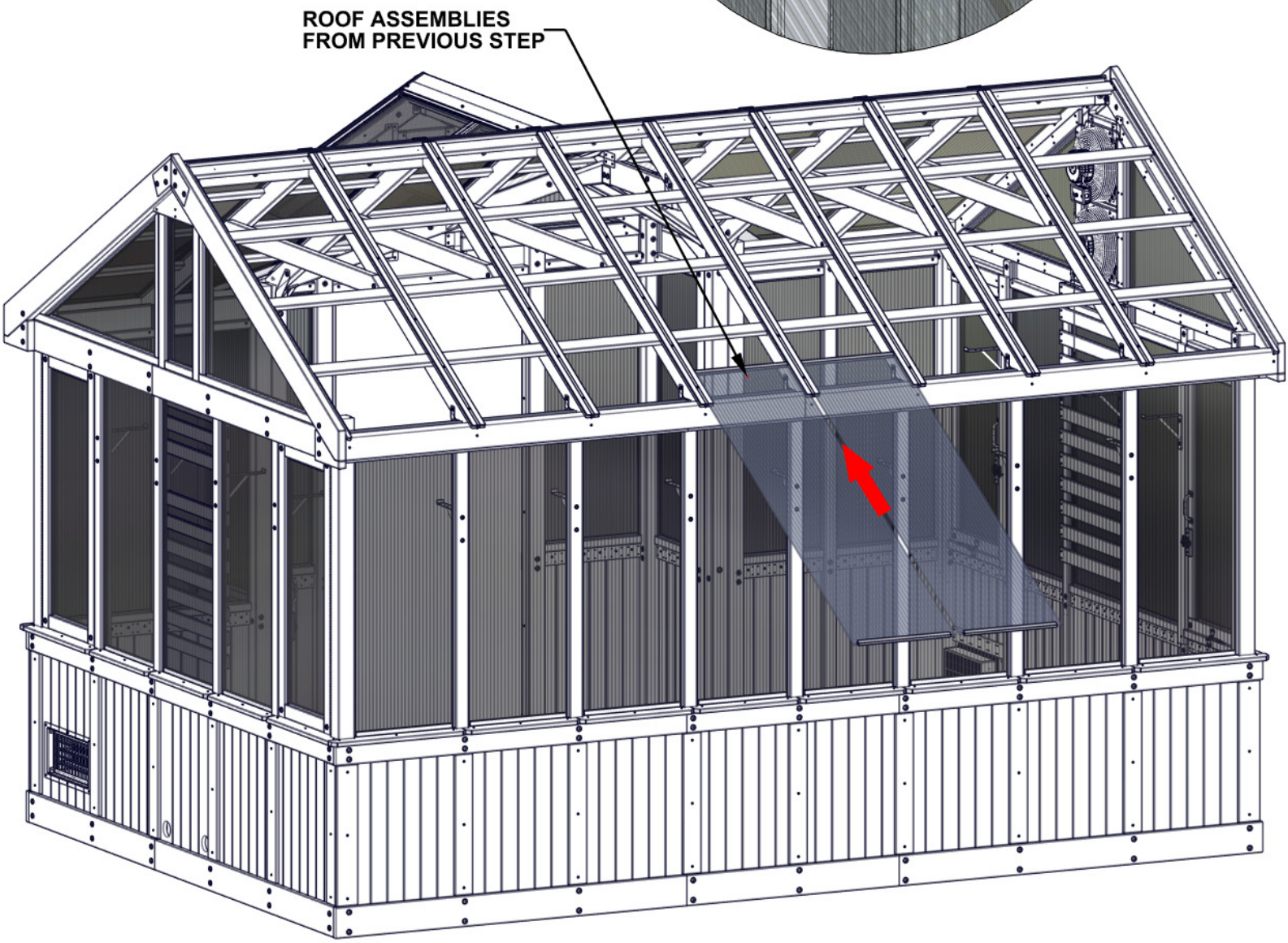

STEP 218 - ROOF ASSEMBLY

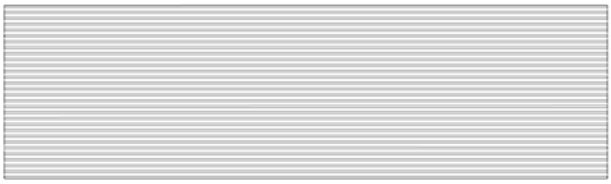

A6P01212 POLY SHEET
(x4)

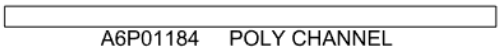

A6P01184 POLY CHANNEL
(x8)

A6P00690 DUST SEAL TAPE

TO APPLY DUST SEAL TAPE AND POLY CHANNEL:
- CUT 2 STRIPS OF DUST SEAL TAPE THE SAME WIDTH AS THE POLY SHEET.
- WRAP DUST SEAL TAPE ALONG EDGE OF POLY SHEET WIDTH.
- AFTER TAPE IS SECURE, PUSH CHANNEL ON OVER THE TAPE, CENTERING ON THE POLY SHEET.
- REPEAT ON THE BOTTOM SIDE OF POLY SHEET.
- REPEAT FOR ALL FOUR ROOF ASSEMBLIES.

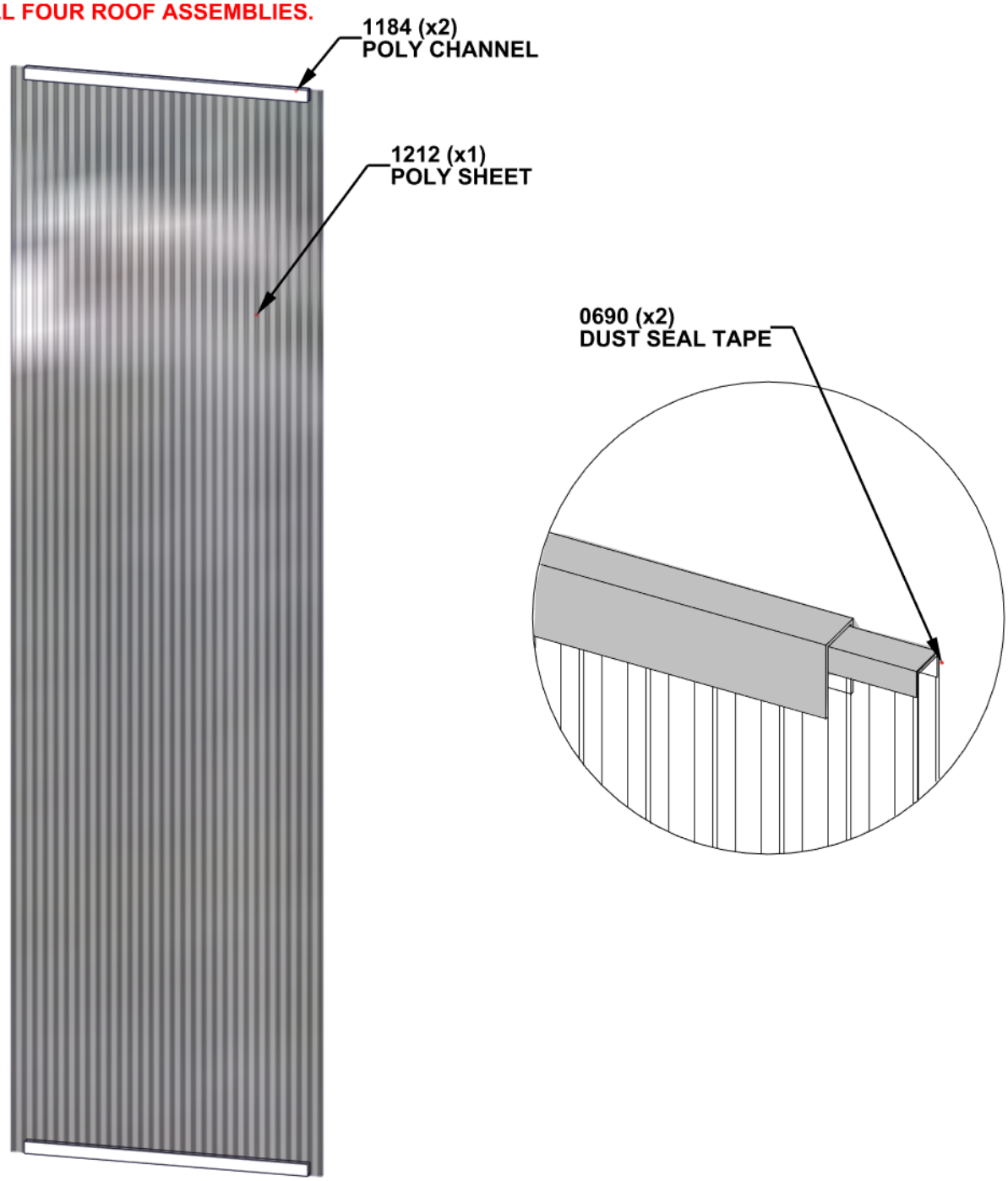

STEP 219 - ROOF ASSEMBLY

IMPORTANT!

- ENSURE UV SIDE OF ROOF PANELS ARE FACING OUTSIDE.
- REMOVE THE PROTECTIVE FILM PRIOR TO INSTALLATION OF ROOF PANELS.

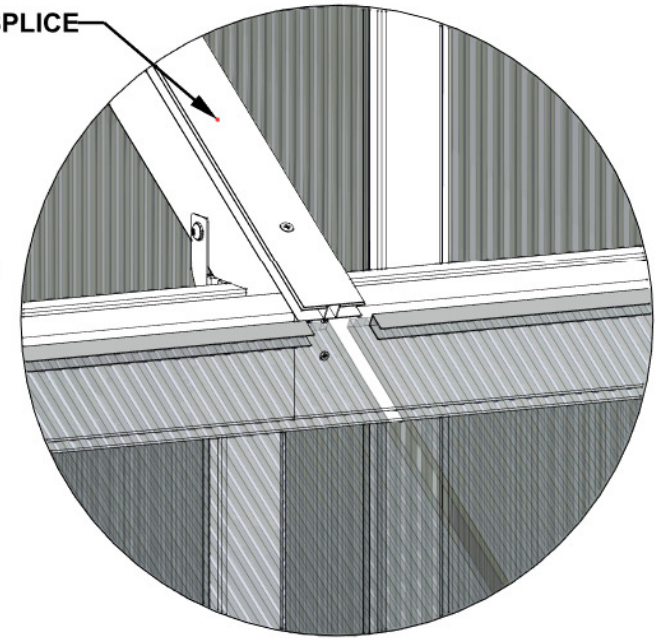

- SLIDE POLY SHEETS INTO POLY SHEET SPLICES.
- PUSH THE SHEETS UNTIL BOTTOM OF SHEET IS FLUSH WITH POLY SHEET SPLICE AS SHOWN.

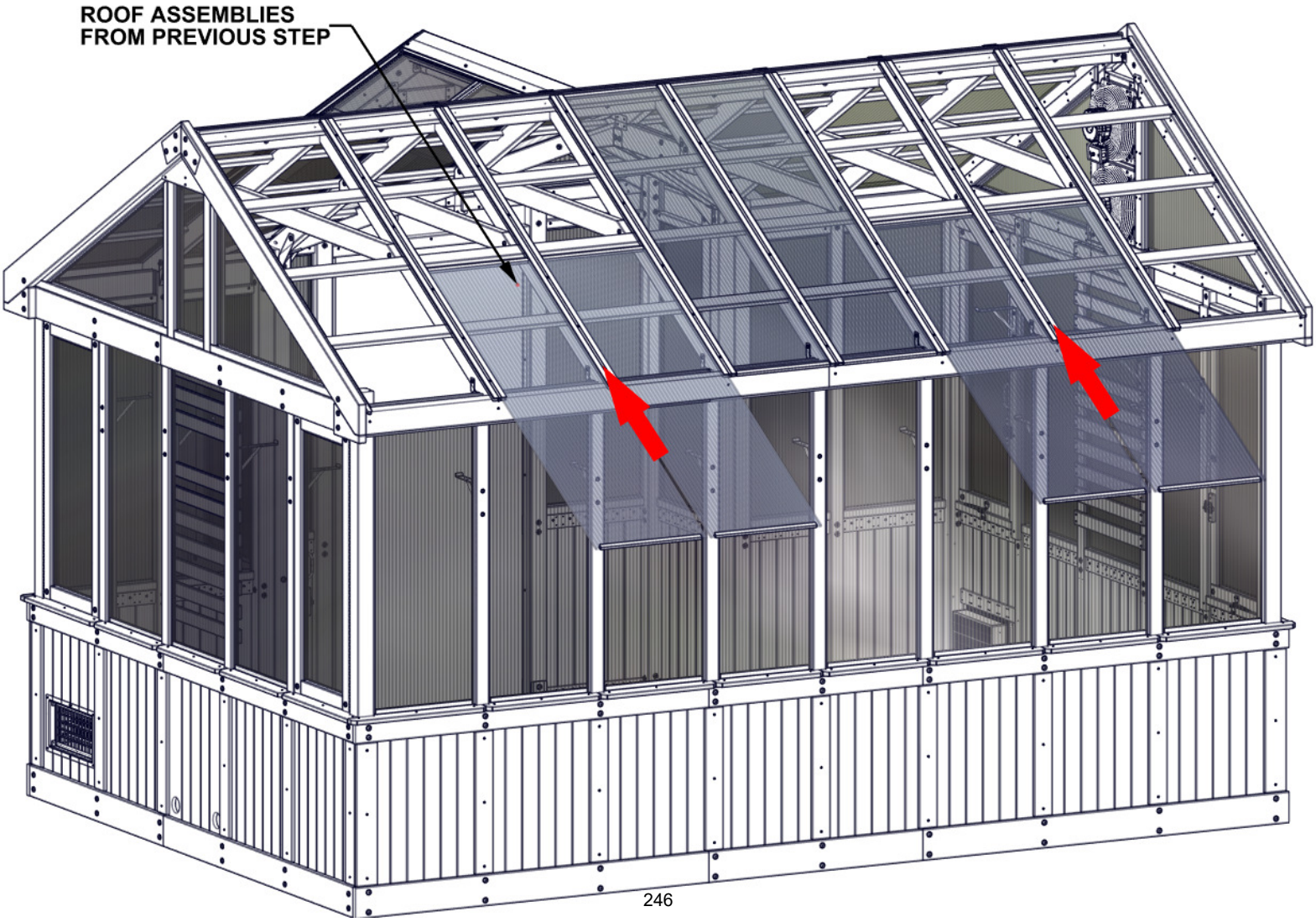

STEP 220 - ROOF ASSEMBLY

A6P01214 POLY SHEET
(x2)

A6P01215 POLY CHANNEL
(x4)

A6P00690 DUST SEAL TAPE

TO APPLY DUST SEAL TAPE AND POLY CHANNEL:
- CUT 2 STRIPS OF DUST SEAL TAPE THE SAME WIDTH AS THE POLY SHEET.
- WRAP DUST SEAL TAPE ALONG EDGE OF POLY SHEET WIDTH.
- AFTER TAPE IS SECURE, PUSH CHANNEL ON OVER THE TAPE, CENTERING ON THE POLY SHEET.
- REPEAT ON THE BOTTOM SIDE OF POLY SHEET.
- REPEAT FOR BOTH ROOF ASSEMBLIES.

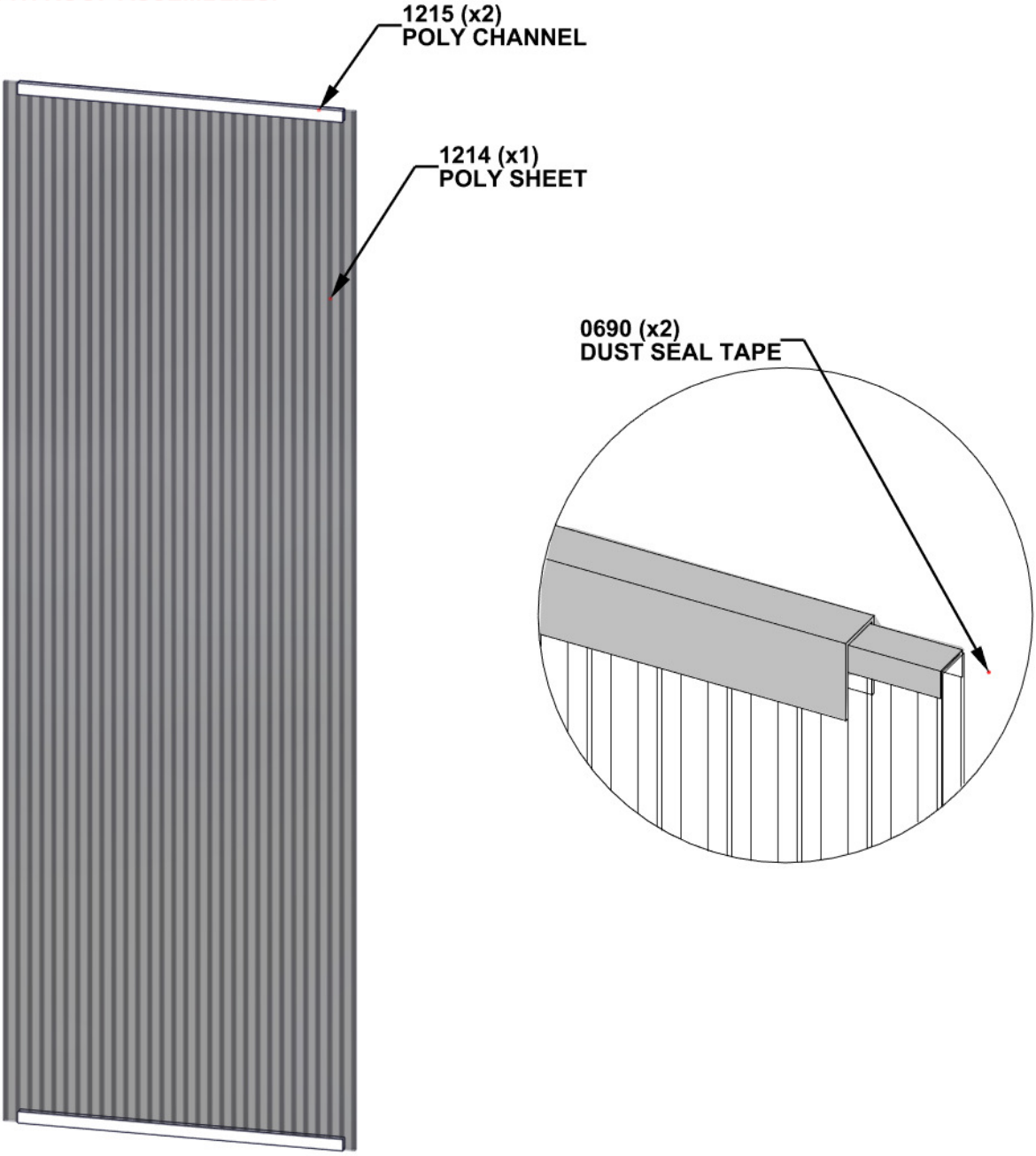

STEP 221 - ROOF ASSEMBLY

IMPORTANT!

- ENSURE UV SIDE OF ROOF PANELS ARE FACING OUTSIDE.
- REMOVE THE PROTECTIVE FILM PRIOR TO INSTALLATION OF ROOF PANELS.

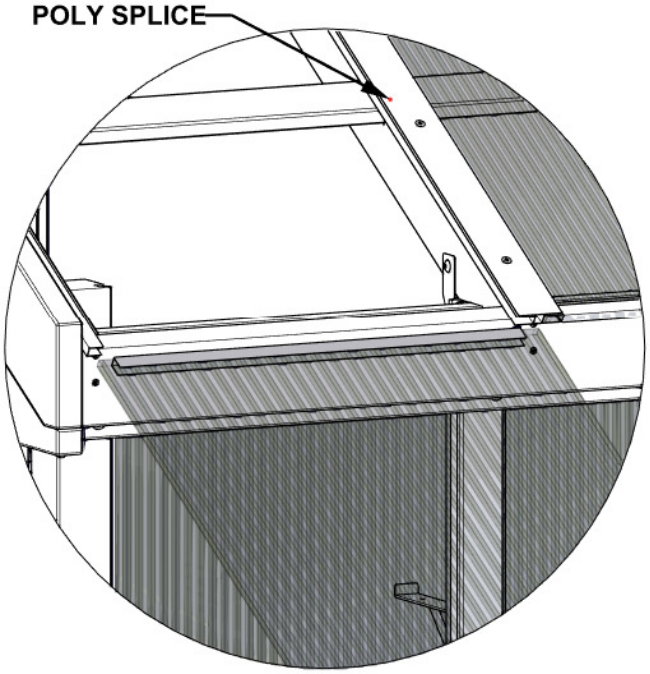

- SLIDE POLY SHEETS INTO POLY SHEET SPLICES.
- PUSH THE SHEETS UNTIL BOTTOM OF SHEET IS FLUSH WITH POLY SHEET SPLICE AS SHOWN.

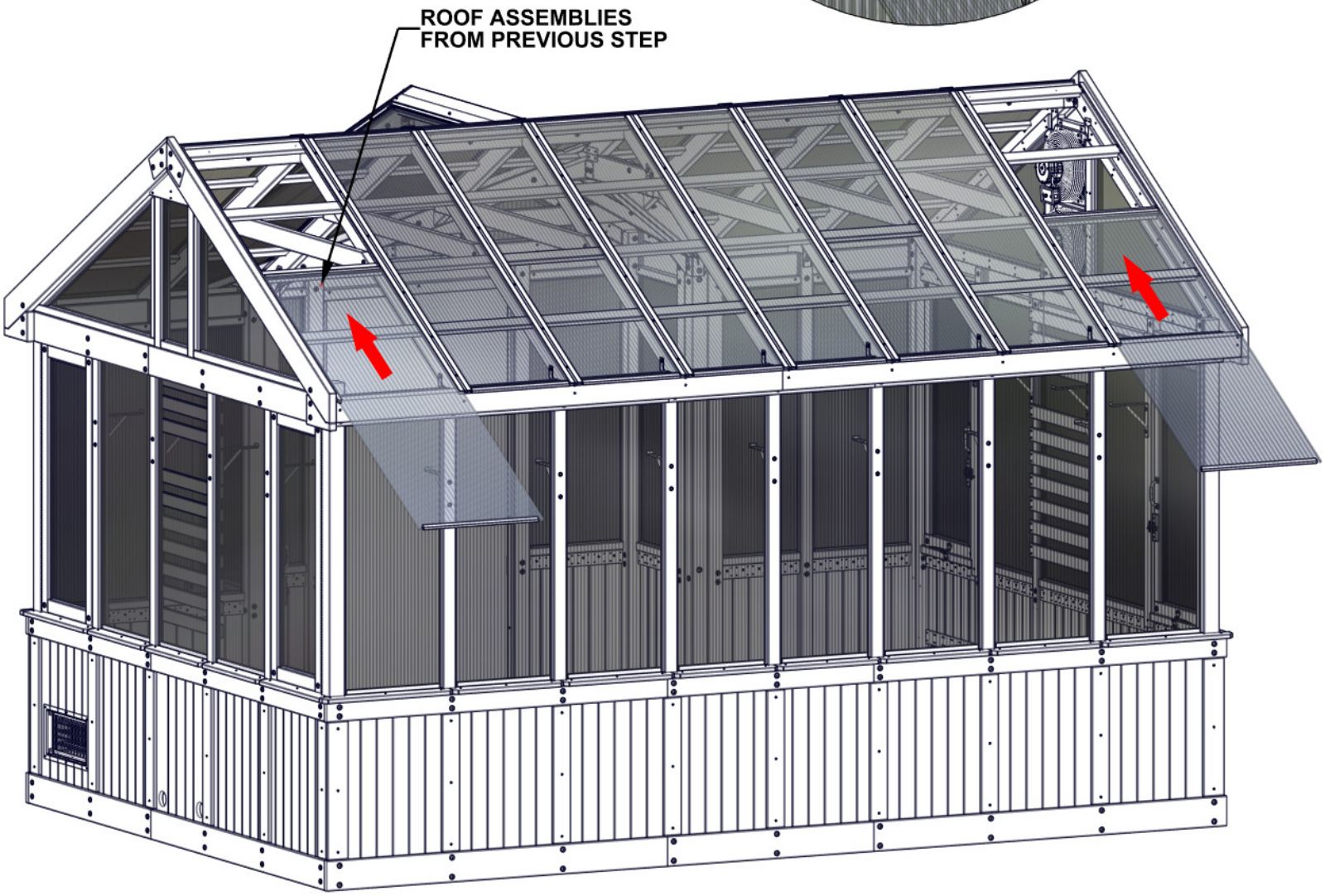

STEP 222 - ROOF ASSEMBLY

A4M04511 SPLICE COVER
(x7)

WARNING: GLOVES ARE RECOMMENDED WHEN HANDLING STEEL.

REMOVE BLUE FILM FROM SPLICE COVERS.

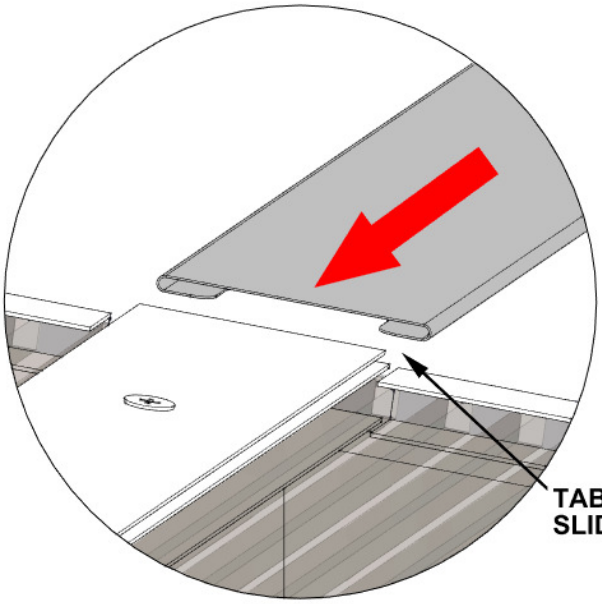

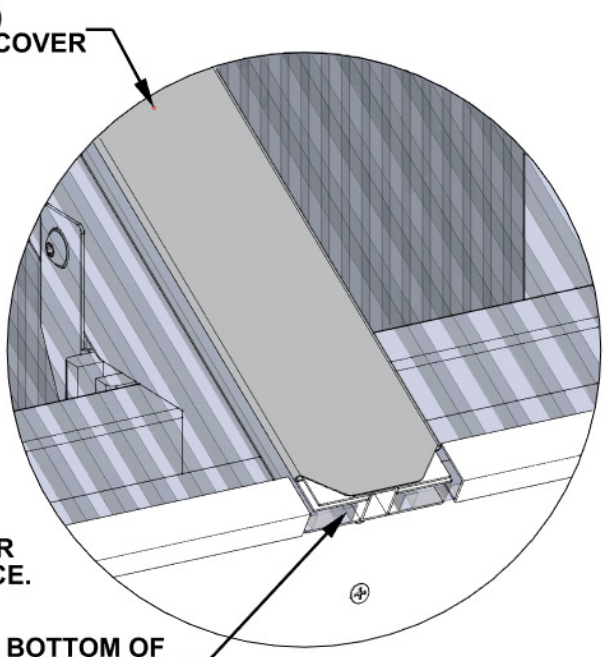

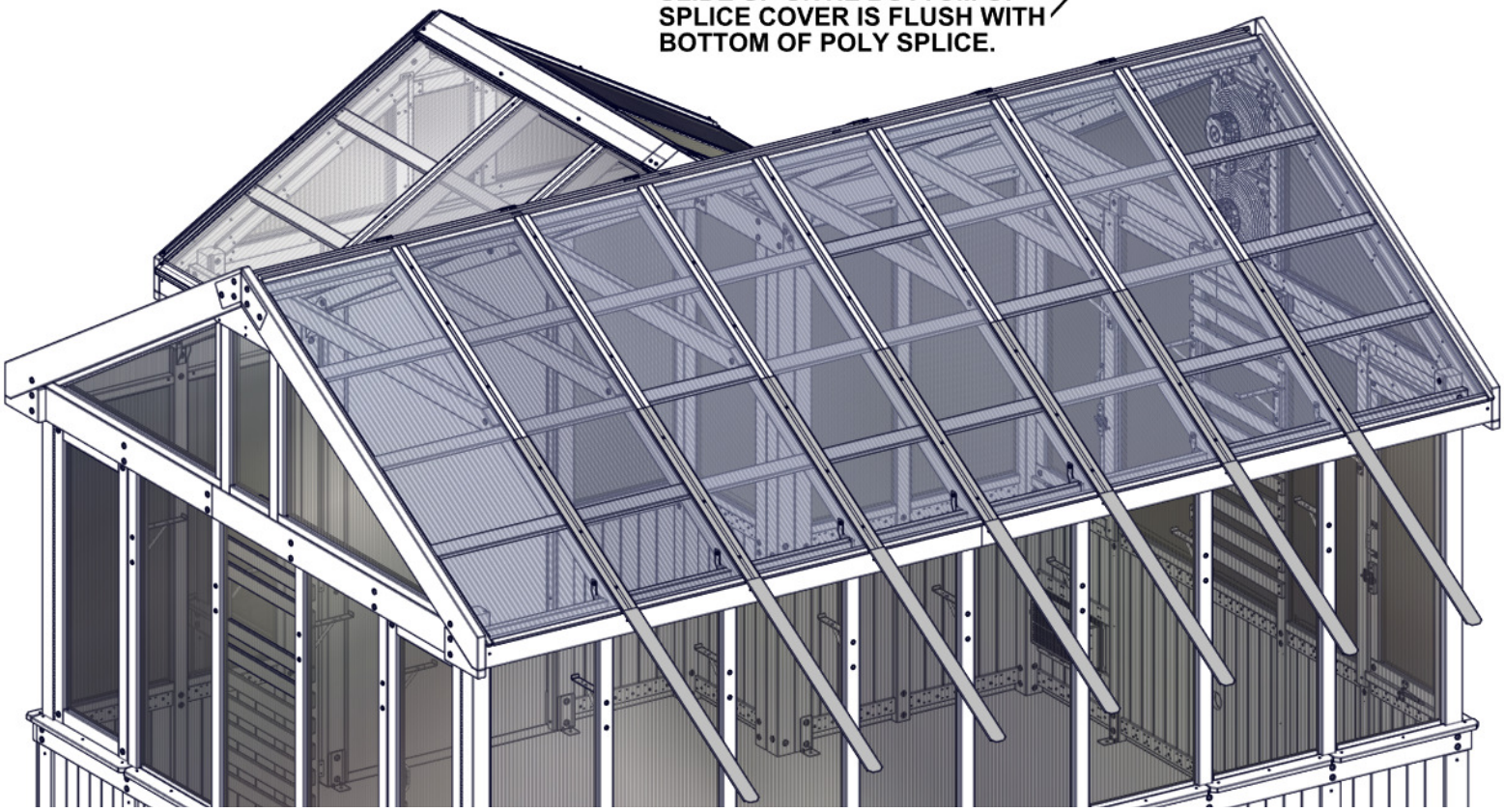

STEP 223A - ROOF ASSEMBLY

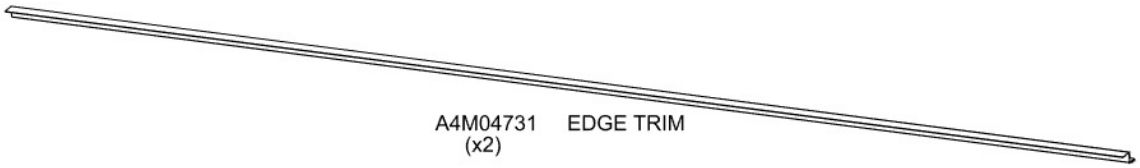

WARNING: GLOVES ARE RECOMMENDED WHEN HANDLING STEEL.

REMOVE BLUE FILM FROM TRIM.

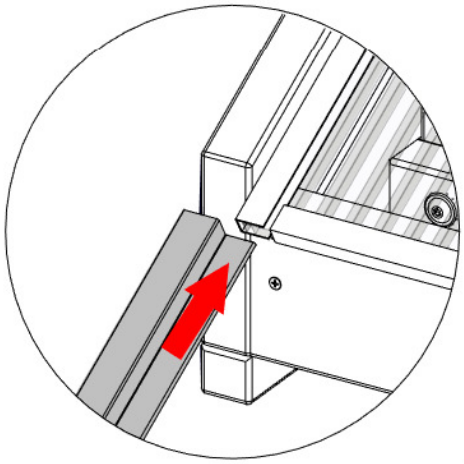

SLIDE TRIM INTO PLACE WITH POLY CHANNEL FITTING INTO OPEN HEM. ENSURE CORRECT ORIENTATION AS SHOWN.

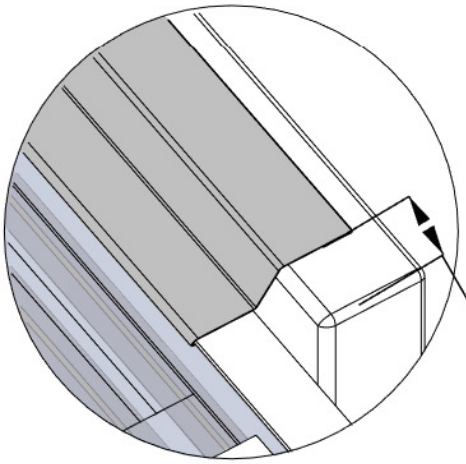

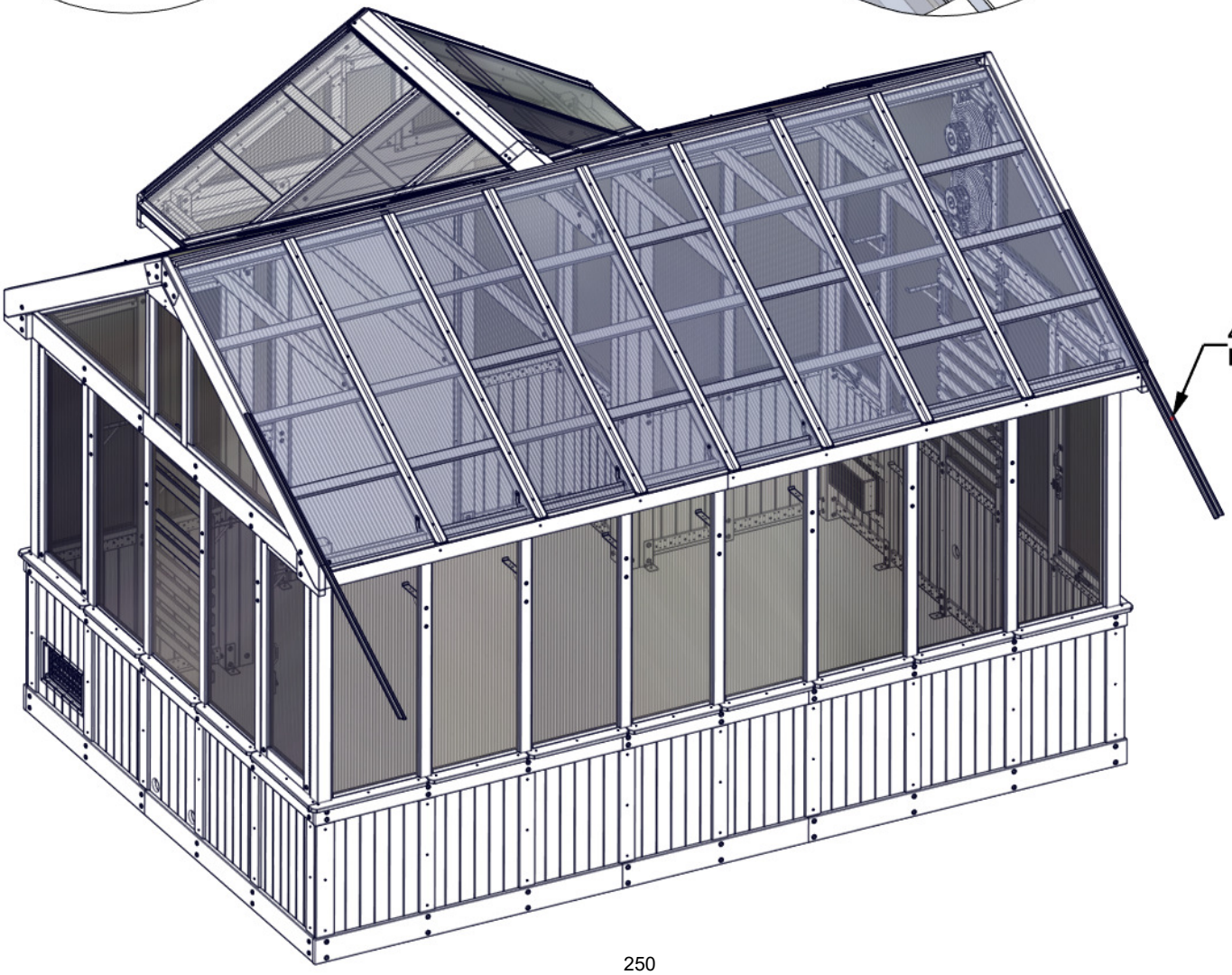

STEP 223B - ROOF ASSEMBLY

QTY	PART NUMBER	DESCRIPTION
8	H101117	SCREW WOODGRIP 10-16x3/4" BLK

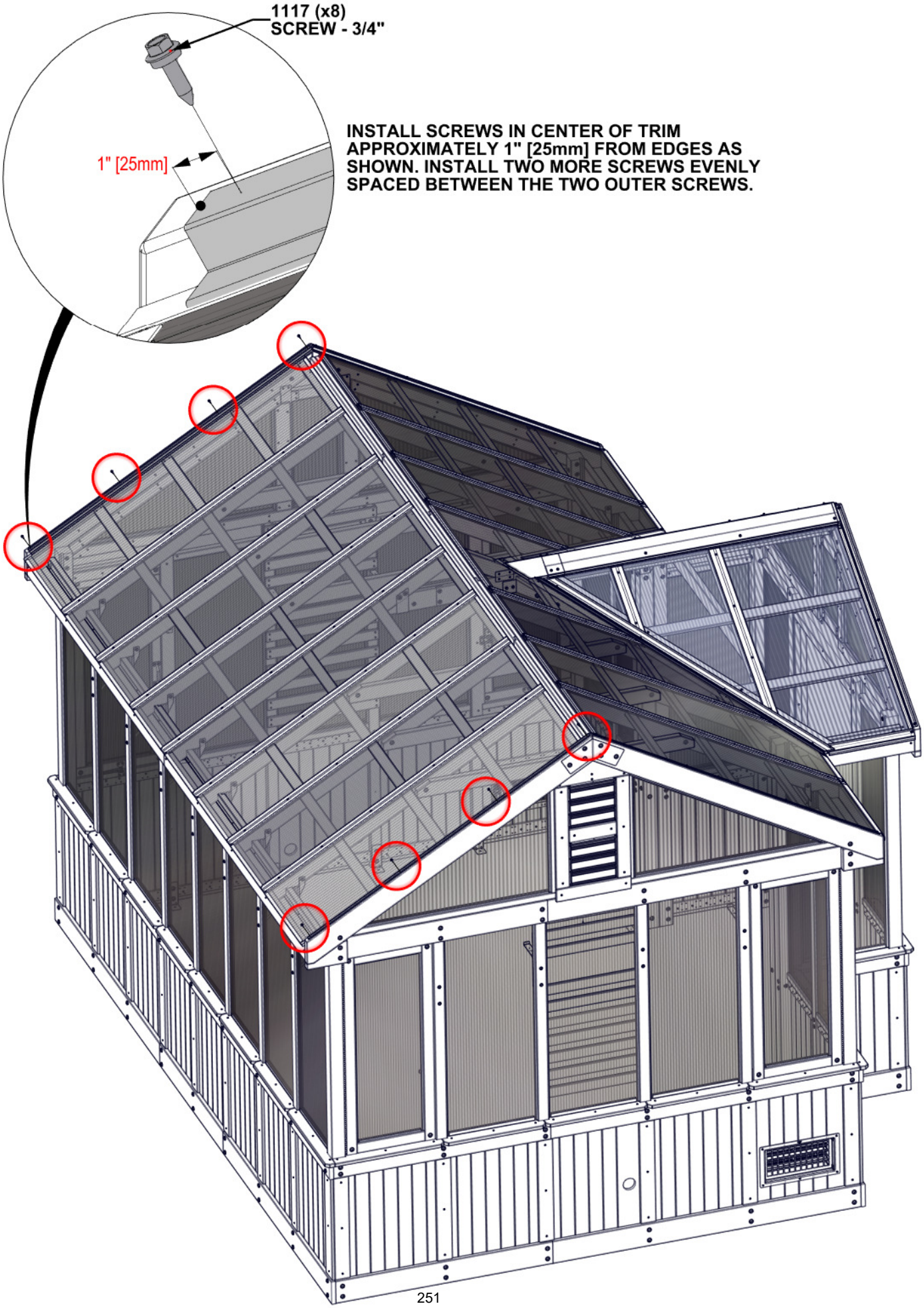

INSTALL SCREWS IN CENTER OF TRIM APPROXIMATELY 1" [25mm] FROM EDGES AS SHOWN. INSTALL TWO MORE SCREWS EVENLY SPACED BETWEEN THE TWO OUTER SCREWS.

STEP 224A - ROOF ASSEMBLY

A6P01531 10 OZ SILICONE TUBE
(x1)

H101464 CAULK GUN
(x1)

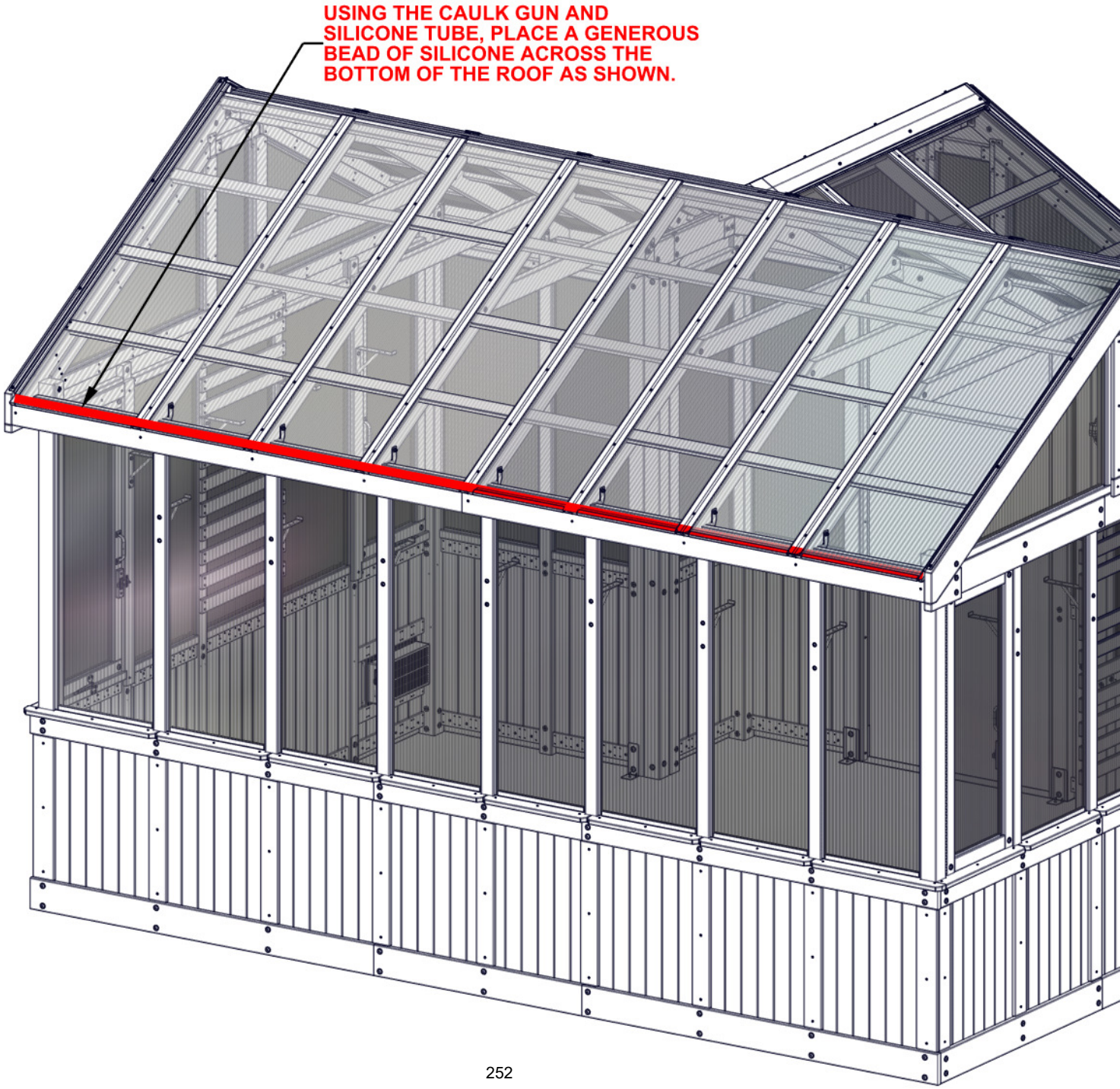

STEP 224B - ROOF ASSEMBLY

QTY	PART NUMBER	DESCRIPTION
9	H101206	SCREW WOODGRIP 10-16x1-1/4"

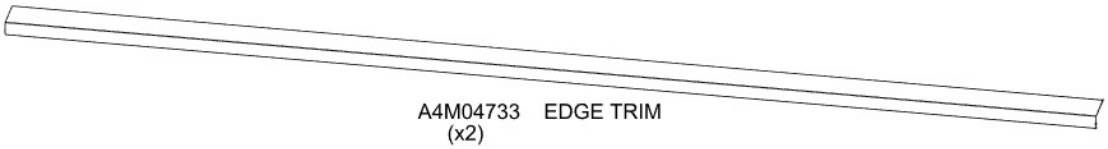

A4M04733 EDGE TRIM
(x2)

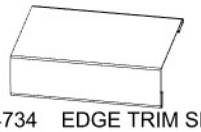

A4M04734 EDGE TRIM SPLICE
(x1)

WARNING: GLOVES ARE RECOMMENDED WHEN HANDLING STEEL.

REMOVE BLUE FILM FROM EDGE TRIM AND EDGE TRIM SPLICE.

ALIGN EDGE TRIM AS NOTED, THEN DRILL PILOT HOLES AT SHOWN SCREW LOCATIONS USING AN 11/32" [9mm] DRILL BIT.

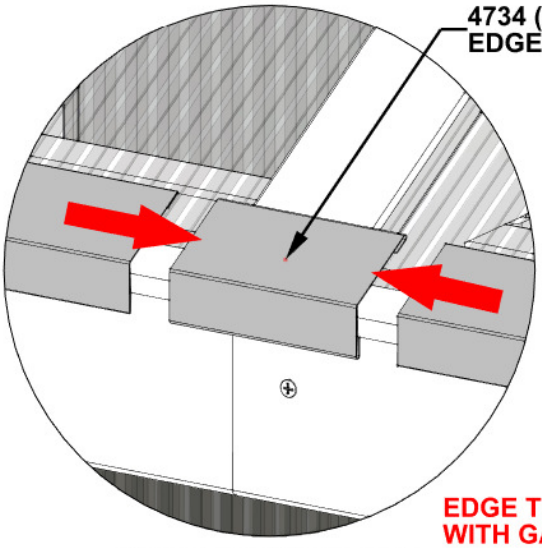

SLIDE EDGE TRIM INTO EDGE TRIM SPLICE. ADJUST AS NEEDED.

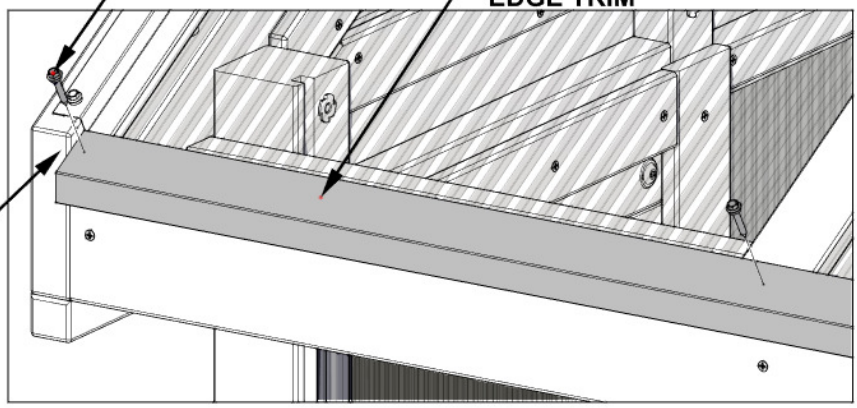

EDGE TRIM IS FLUSH WITH GABLE END.

CENTER SCREWS ON SPLICE COVERS AND ATTACH SCREWS THROUGH TRIM AND SPLICE COVERS.

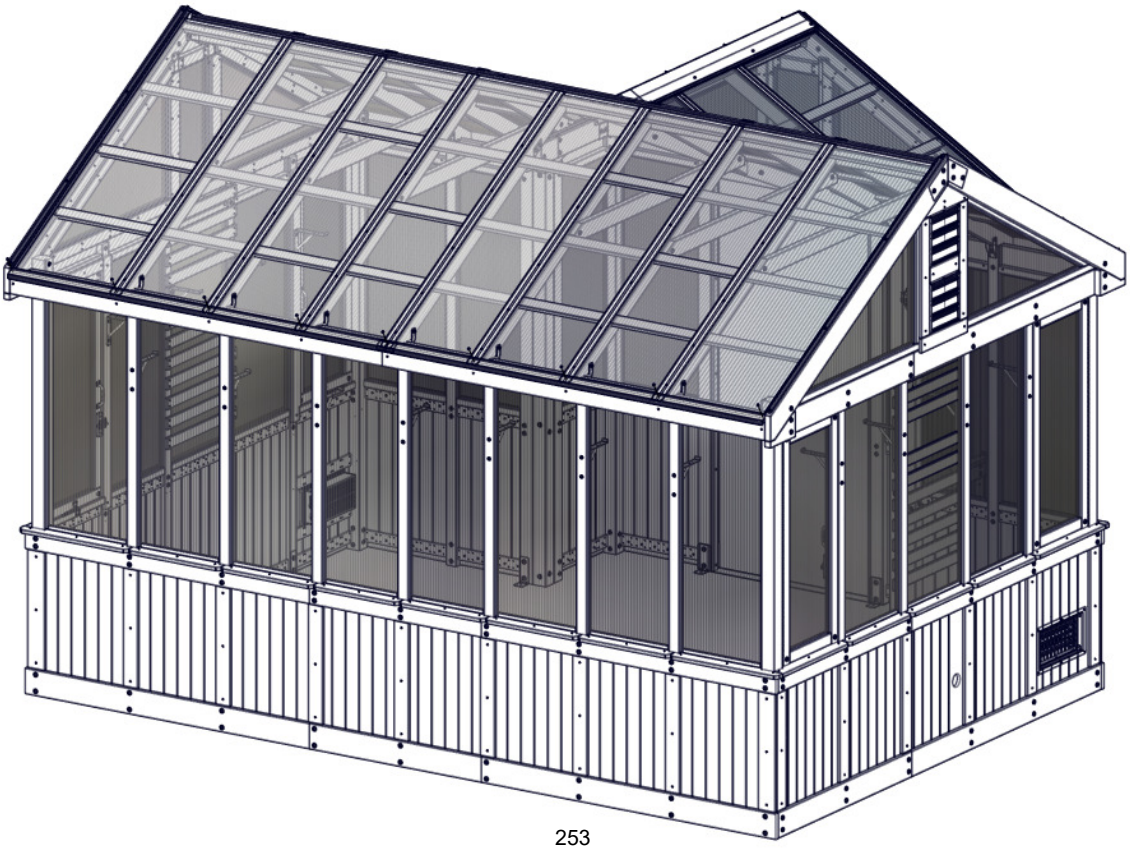

STEP 224C - ROOF ASSEMBLY

A6P01531 (x1) 10 OZ SILICONE TUBE

H101464 (x1) CAULK GUN

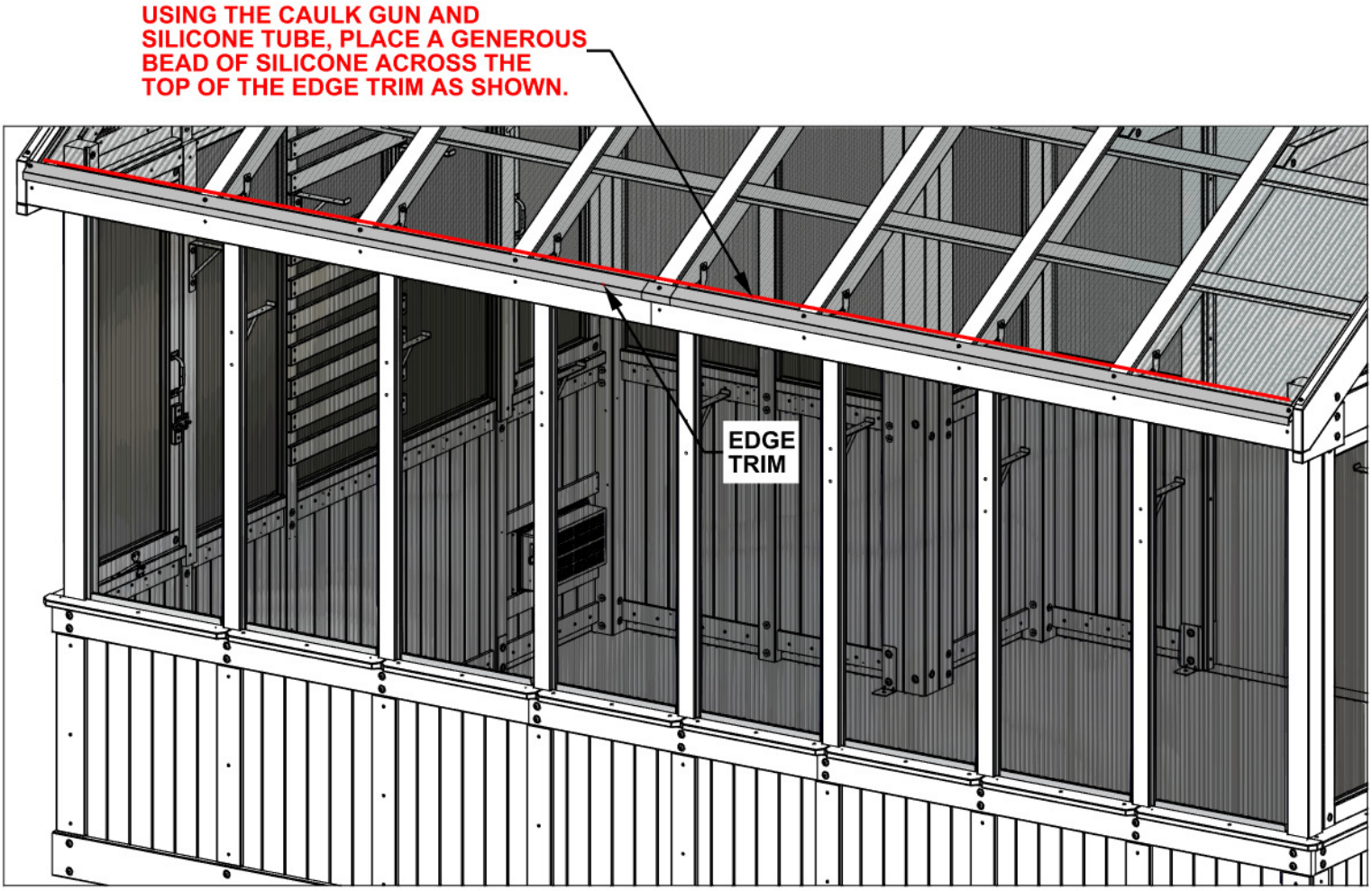

STEP 225 - ROOF ASSEMBLY

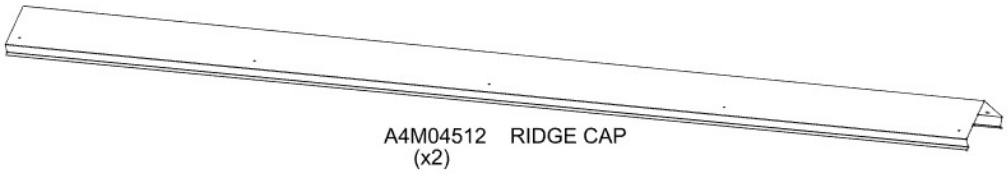

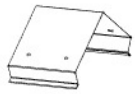

WARNING: GLOVES ARE RECOMMENDED WHEN HANDLING STEEL.

REMOVE BLUE FILM FROM RIDGE CAP AND RIDGE CAP SPLICE.

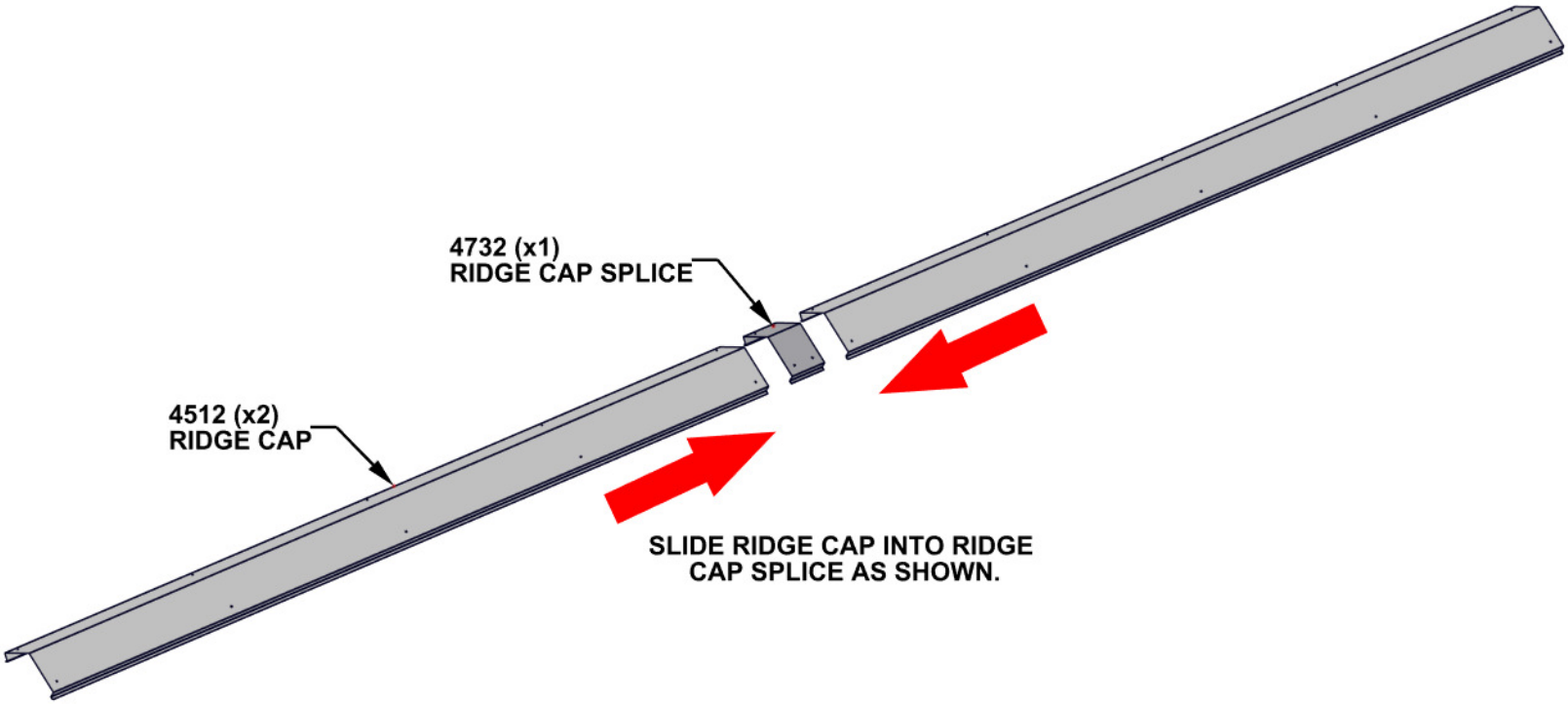

STEP 226 - ROOF ASSEMBLY

QTY	PART NUMBER	DESCRIPTION
20	H101117	SCREW WOODGRIP 10-16x3/4" BLK

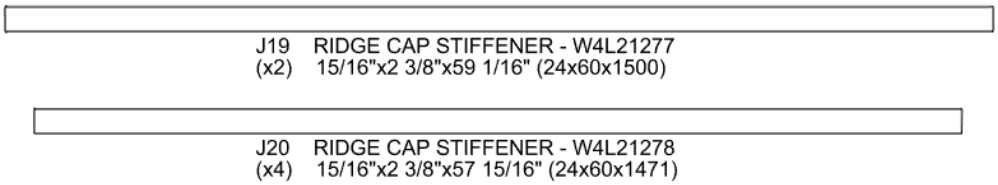

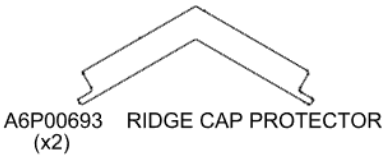

WARNING: GLOVES ARE RECOMMENDED WHEN HANDLING STEEL.

- **ALIGN HOLES OF RIDGE CAP WITH HOLES ON RIDGE CAP SPLICE.**
- **ARRANGE RIDGE STIFFENERS AS SHOWN.**
- **ATTACH RIDGE CAP ASSEMBLY USING TEN SCREWS ALONG EACH SIDE.**
- **CONFIRM TOTAL LENGTH OF ASSEMBLED RIDGE CAP TO BE 14'-7" +/- 1/8" [4446mm].**

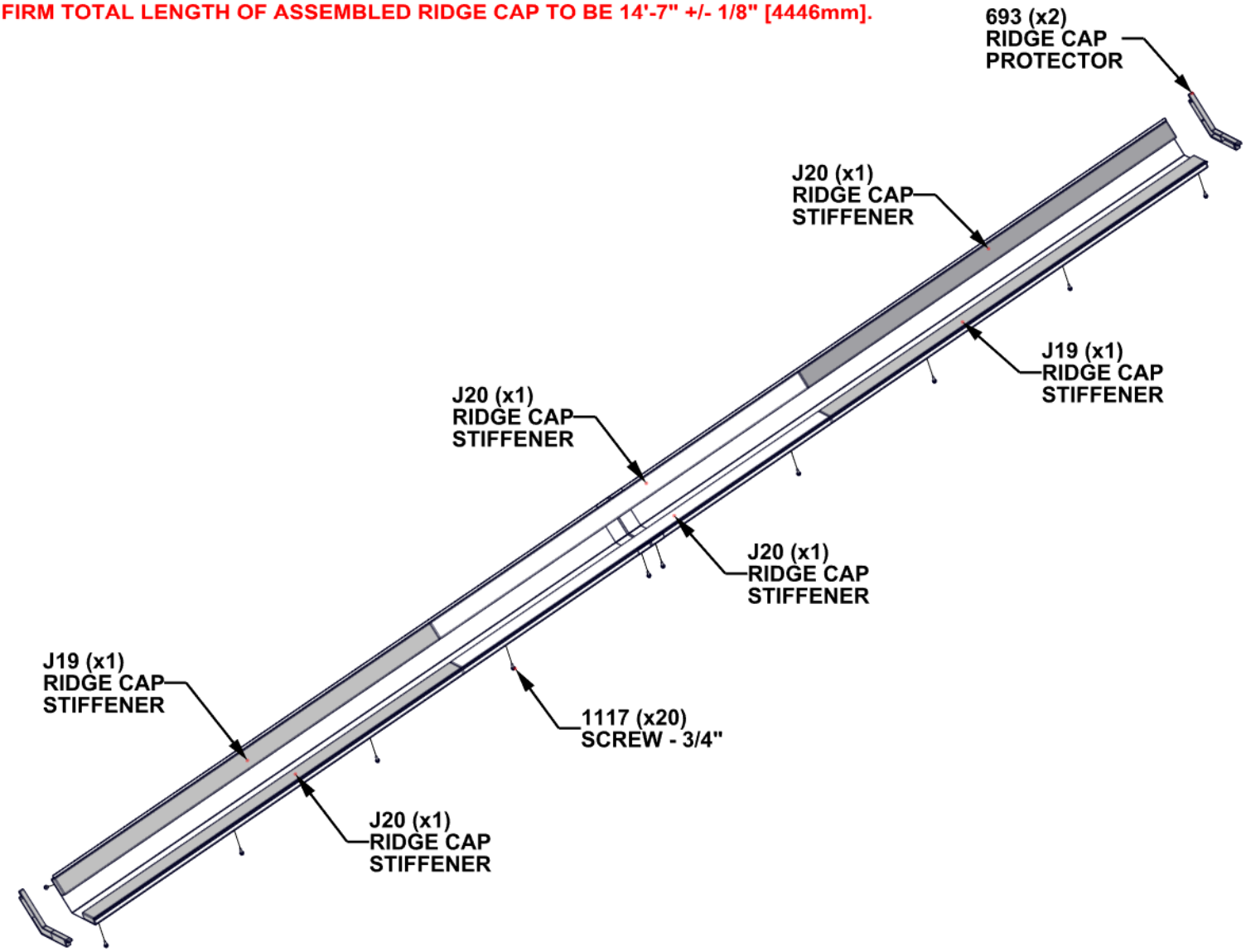

REMOVE SPACERS FROM RIDGE CAP PROTECTORS BEFORE INSTALLING.

STEP 227 - ROOF ASSEMBLY

QTY	PART NUMBER	DESCRIPTION
32	H100483	SCREW PFH 8x2 1/4 BLK

WARNING: GLOVES ARE RECOMMENDED WHEN HANDLING STEEL.
- **TWO ADULTS WILL BE NEEDED FOR THIS STEP.**
- **DO NOT CLIMB ON ROOF TO INSTALL RIDGE CAP.**
- **RIDGE CAP HAS BEEN DESIGNED TO INSTALL WITH THE USE OF A LADDER.**
- **PLACE RIDGE CAP ASSEMBLY ON TOP OF ROOF RIDGE UNTIL BOTH ENDS ARE SEATED INSIDE THE GABLES AS SHOWN.**
- **ONE ADULT MUST KEEP DOWNWARD PRESSURE ON THE RIDGE CAP ASSEMBLY WHILE THE SECOND ADULT IS INSIDE ATTACHING THE SCREWS.**
- **INSTALL SCREWS THROUGH PILOT HOLES IN PURLINS CLOSEST TO RIDGE.**

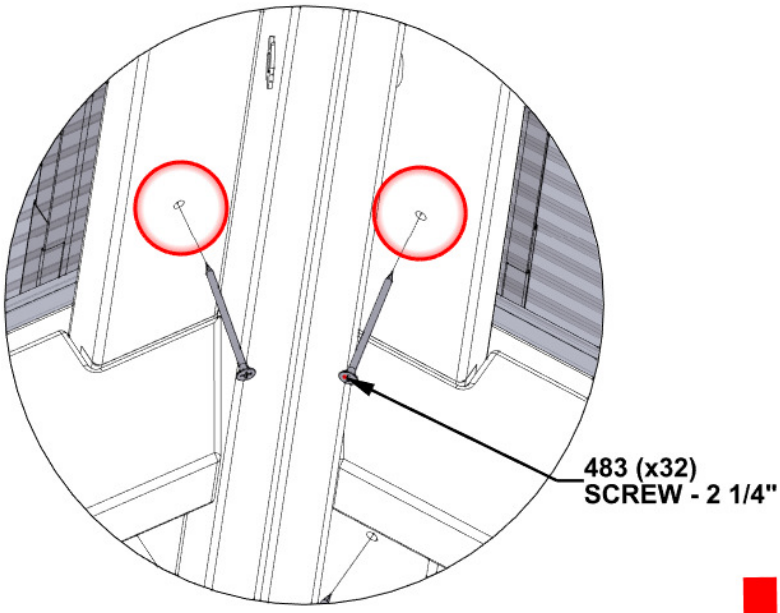

USE PHILLIPS BIT EXTENSION TO ATTACH SCREWS.

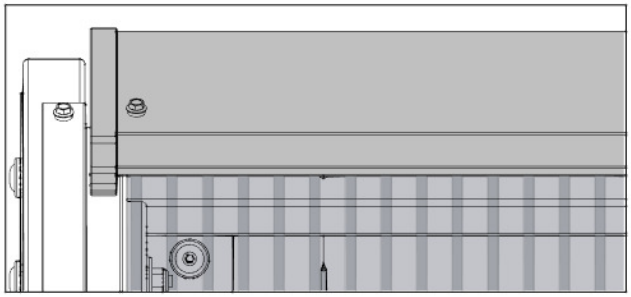

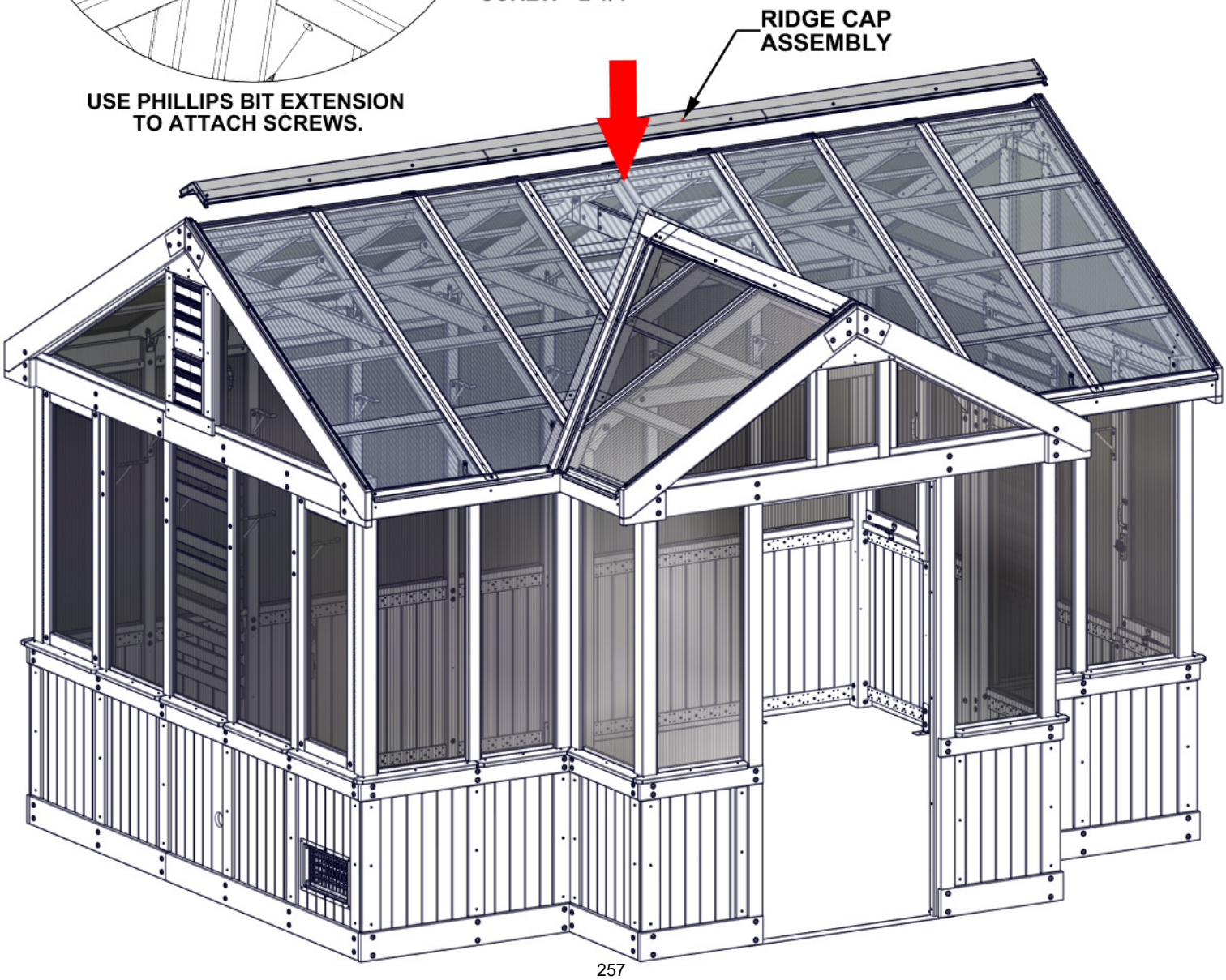

STEP 228 - ROOF ASSEMBLY

A6P01531 10 OZ SILICONE TUBE
(x1)

H101464 CAULK GUN
(x1)

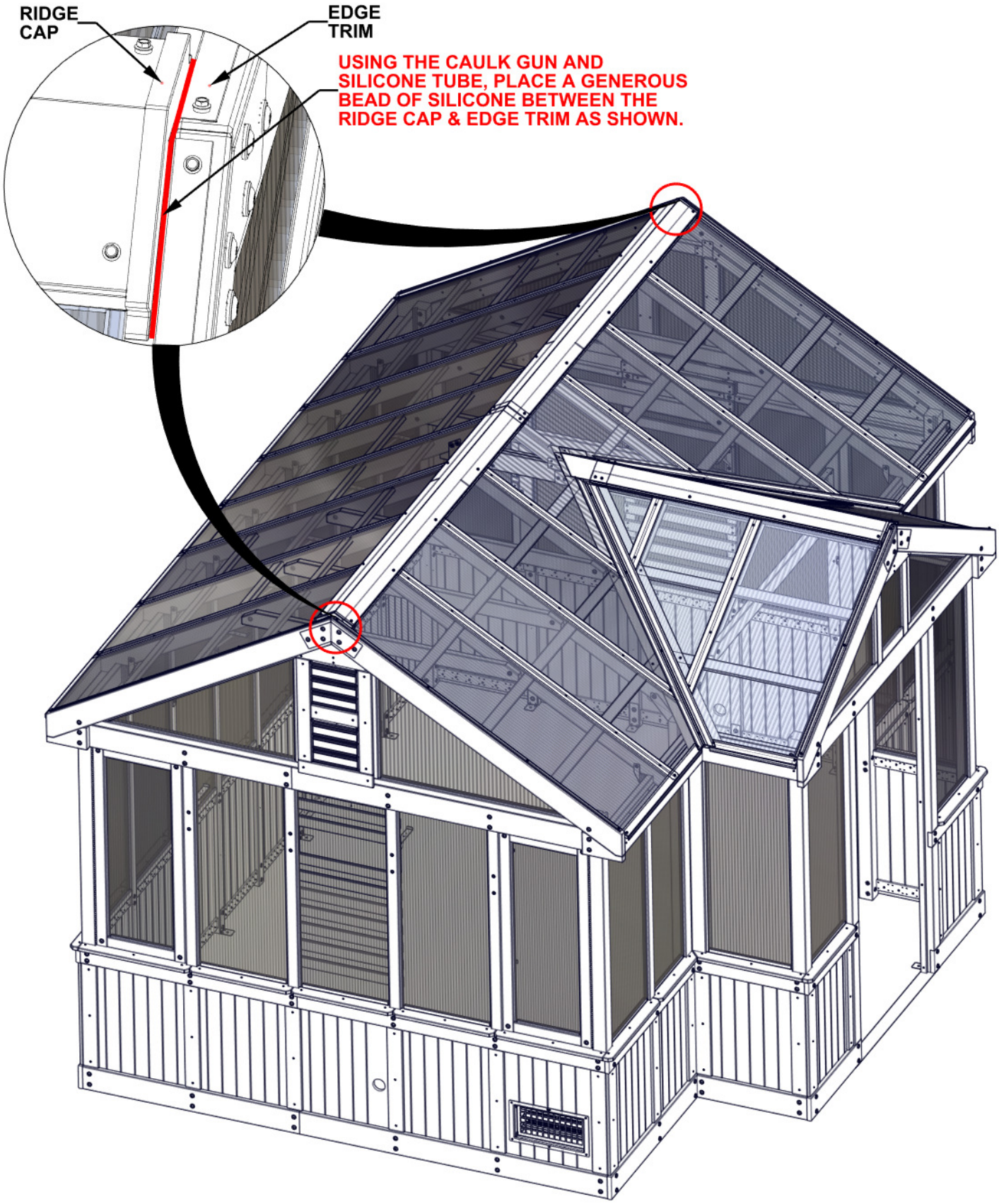

STEP 229 - SHELF ASSEMBLY

QTY	PART NUMBER	DESCRIPTION
8	H100392	SCREW PWH 8x3/4 BLK

H10 SHELF BOARD - W4L21316
(x2) 15/16"x3 3/8"x70 13/16" (24x86x1799)

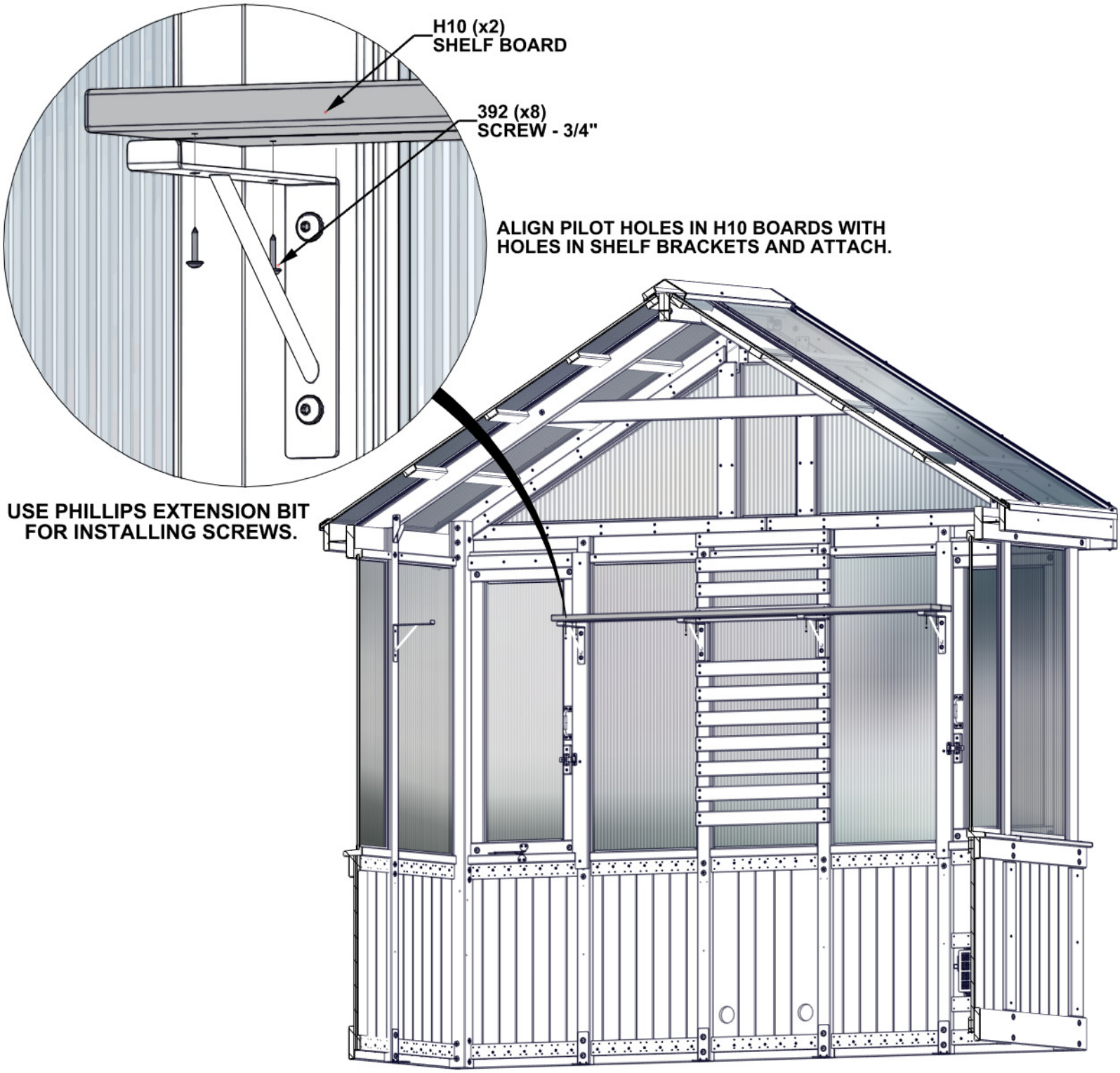

ONLY LEFT SIDE OF GREENHOUSE SHOWN FOR DETAIL.

STEP 230 - SHELF ASSEMBLY

QTY	PART NUMBER	DESCRIPTION
8	H100392	SCREW PWH 8x3/4 BLK

H10 SHELF BOARD - W4L21316
(x2) 15/16"x3 3/8"x70 13/16" (24x86x1799)

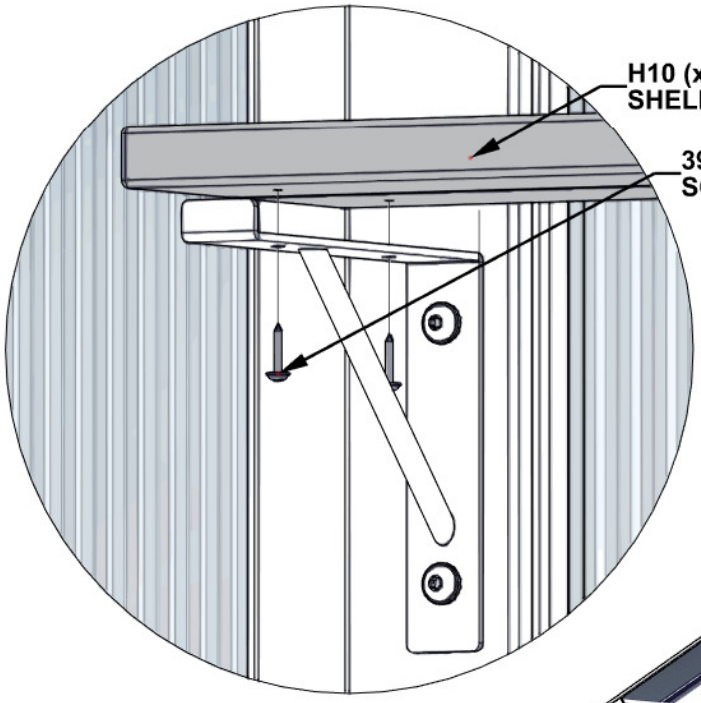

ALIGN PILOT HOLES IN H10 BOARDS WITH HOLES IN SHELF BRACKETS AND ATTACH.

USE PHILLIPS EXTENSION BIT FOR INSTALLING SCREWS.

ONLY RIGHT SIDE OF GREENHOUSE SHOWN FOR DETAIL.

STEP 231 - SHELF ASSEMBLY

QTY	PART NUMBER	DESCRIPTION
14	H100392	SCREW PWH 8x3/4 BLK

H01 SHELF BOARD - W4L20848
(x2) 15/16"x3 3/8"x75 3/4" (24x86x1924)

H09 SHELF BOARD - W4L21314
(x2) 15/16"x3 3/8"x55 3/4" (24x86x1416)

- POSITION AND ORIENT SHELF BOARDS AS SHOWN.
- DO NOT FULLY TIGHTEN SCREWS.

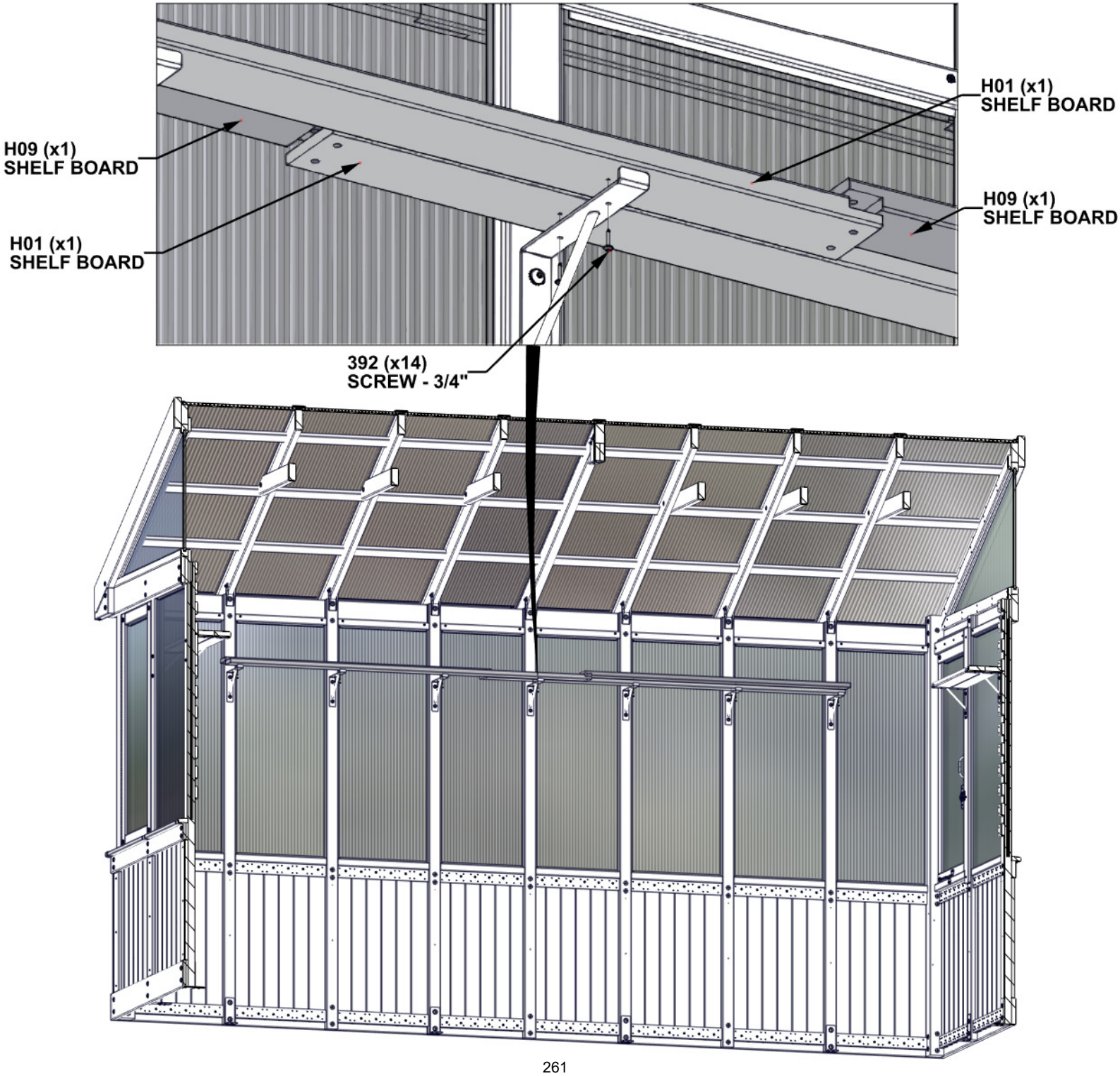

STEP 232 - SHELF ASSEMBLY

QTY	PART NUMBER	DESCRIPTION
4	H100398	T-NUT 1/4 BLK
4	H100405	WASHER LOCK EXT 6x15
4	H101139	BOLT WH 1/4x7/8 BLK

- INSTALL T-NUTS FIRST
- INSTALL HARDWARE AS SHOWN.
- FULLY TIGHTEN SCREWS FROM PREVIOUS STEP

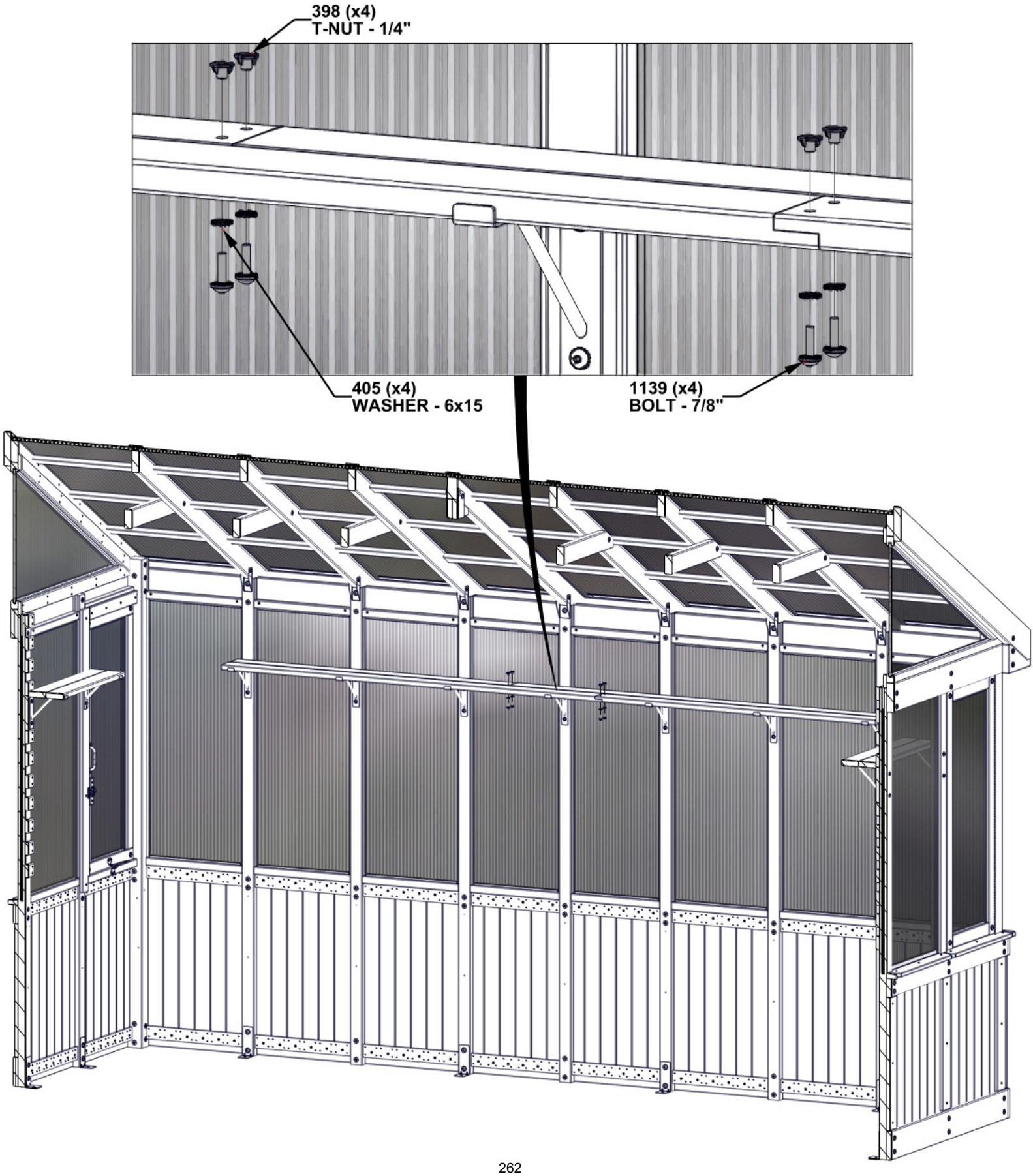

STEP 233 - TABLE ASSEMBLY

QTY	PART NUMBER	DESCRIPTION
2	H100398	TNUT-1/4" BLK
2	H100405	WASHER LOCK EXT 6x15
2	H101284	BOLT WH 1/4x2 3/4 BLK

P07 TABLE CLEAT SPLICE - W4L21295
(x1) 1 7/16"x1 7/16"x6" (36x36x152)

P08 TABLE CLEAT - W4L21296
(x1) 1 7/16"x1 7/16"x22 3/8" (36x36x569)

- INSTALL T-NUTS FIRST

NOTE PILOT HOLES FOR CORRECT ORIENTATION OF P08.

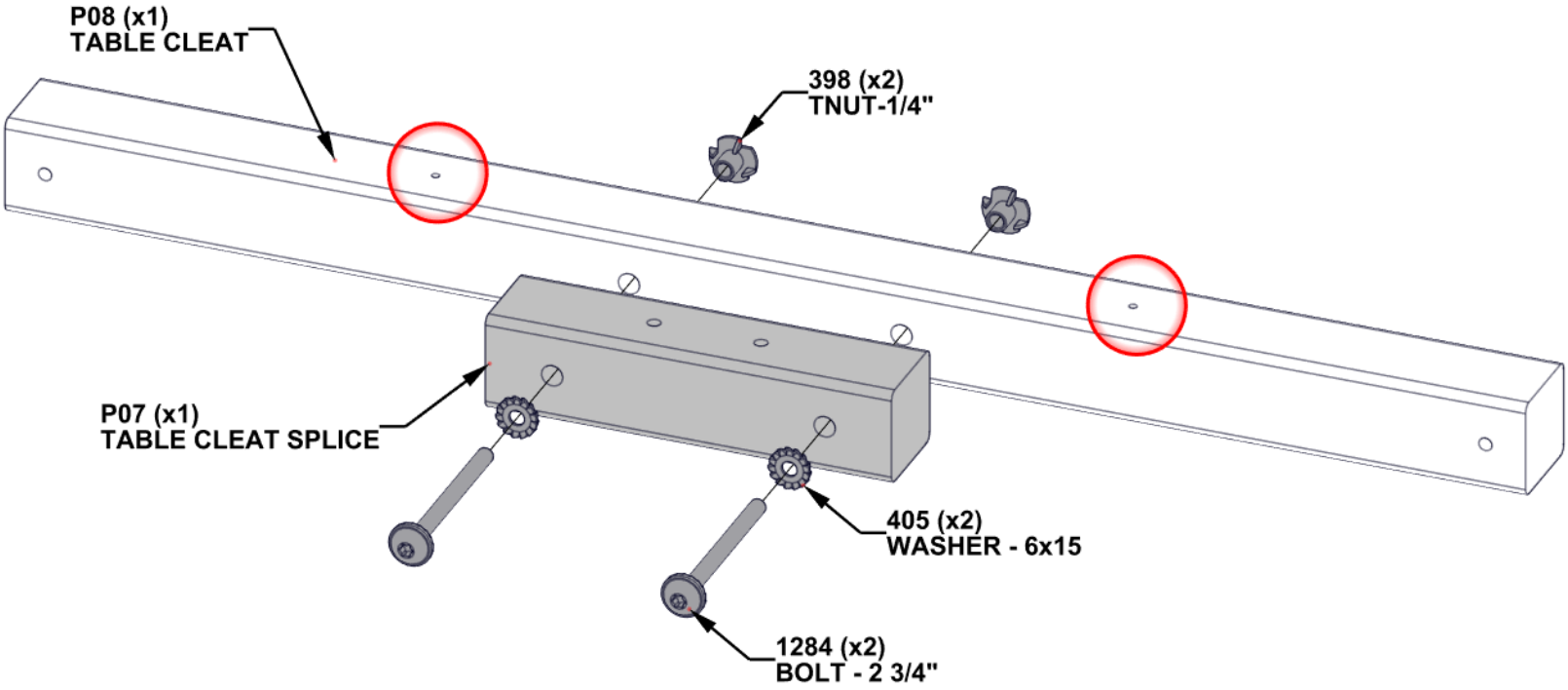

STEP 234 - TABLE ASSEMBLY

QTY	PART NUMBER	DESCRIPTION
6	H100201	SCREW PFH 8x2 1/2 BLK

P06 TABLE CLEAT - W4L21294
(x2) 1 7/16"x1 7/16"x43 9/16" (36x36x1107)

- INSTALL TABLE CLEATS USING PILOT HOLES IN UPRIGHTS.
- NOTE PILOT HOLES FOR CORRECT ORIENTATION OF BOARDS.

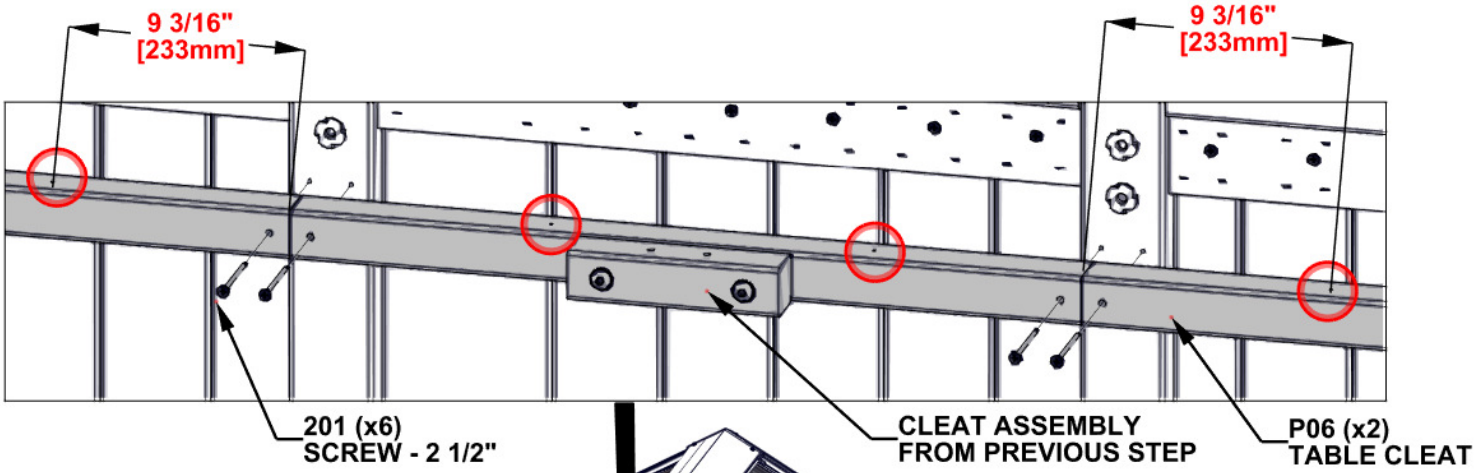

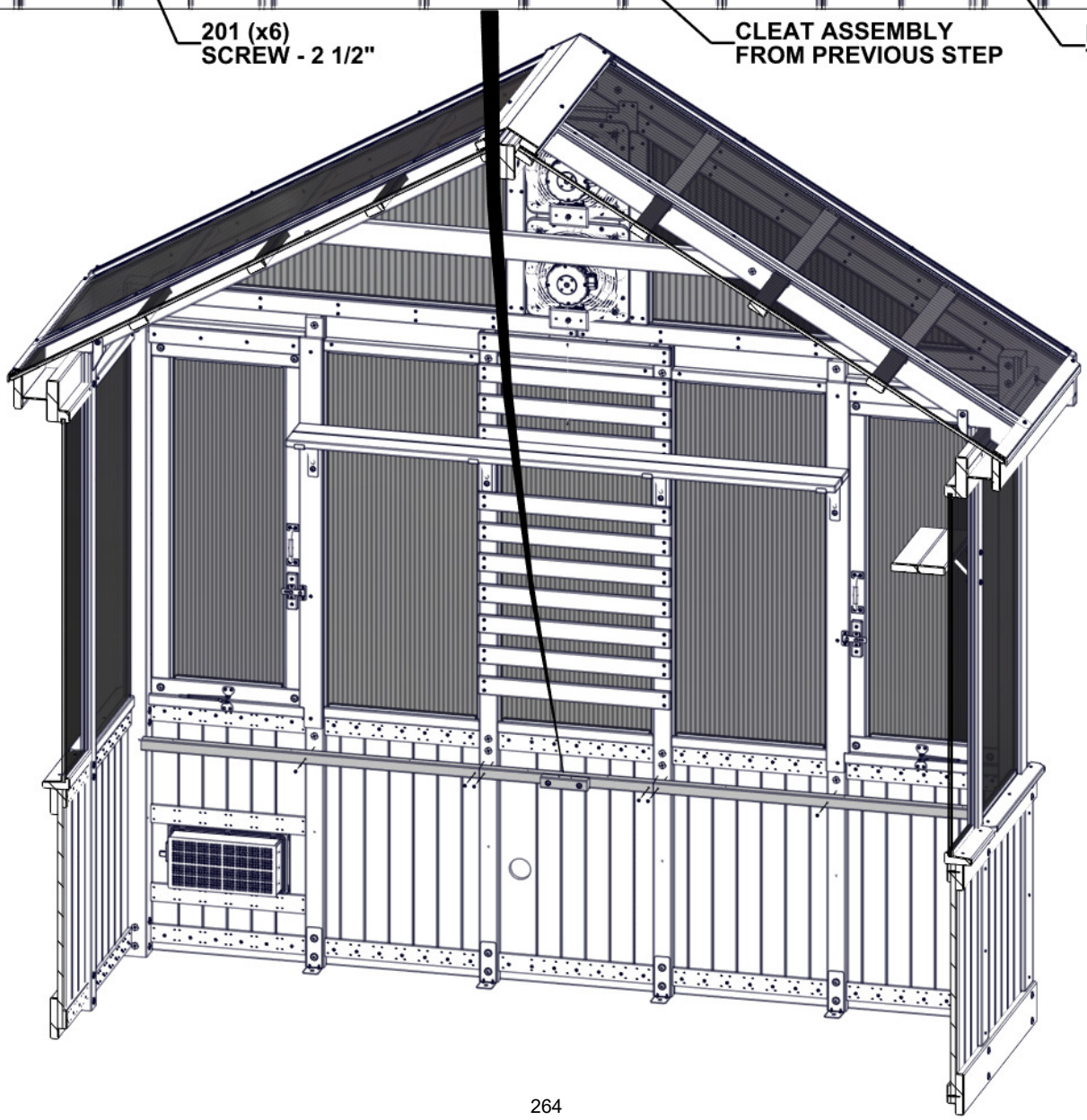

STEP 235 - TABLE ASSEMBLY

QTY	PART NUMBER	DESCRIPTION
6	H100460	LAG SCREW WH 1/4x1 BLK

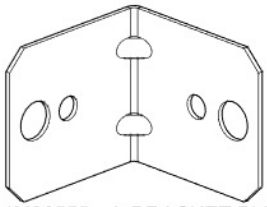

A4M00555 L BRACKET BLK
(x4)

- ATTACH BRACKETS AS SHOWN USING PILOT HOLES IN POSTS AND CLEATS.

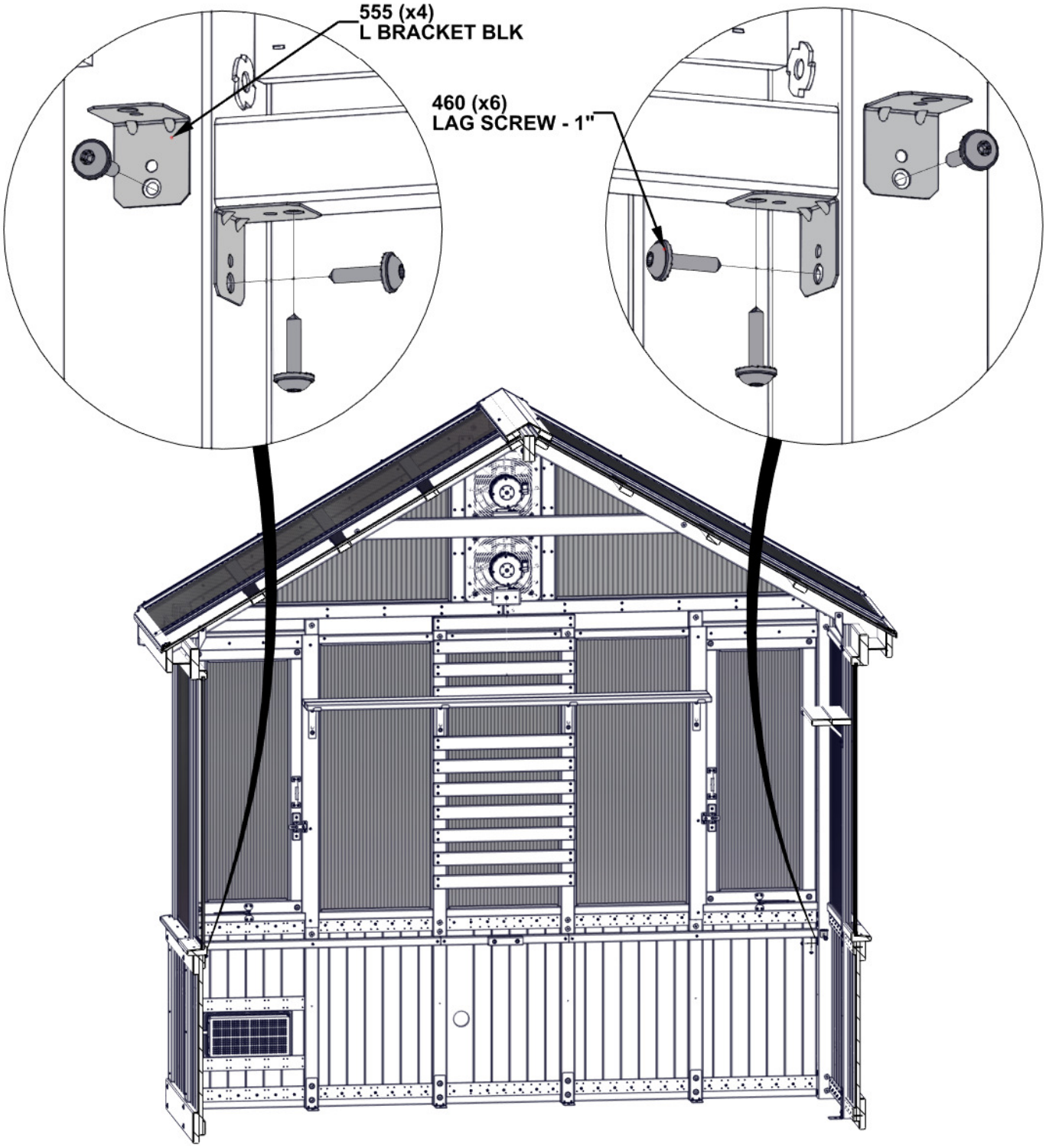

STEP 236 - TABLE ASSEMBLY

QTY	PART NUMBER	DESCRIPTION
6	H100405	WASHER LOCK EXT 6x15
6	H100456	LAG SCREW WH 1/4x2 1/2 BLK

F15 ANGLE BRACE - W4L21301
(x4) 1 7/16"x2 3/8"x18 1/16" (36x60x458)

F16 ANGLE BRACE - W4L21302
(x2) 1 7/16"x2 3/8"x18 1/16" (36x60x458)

- ATTACH ANGLE BRACES AS SHOWN USING PILOT HOLES IN UPRIGHTS AND POSTS.

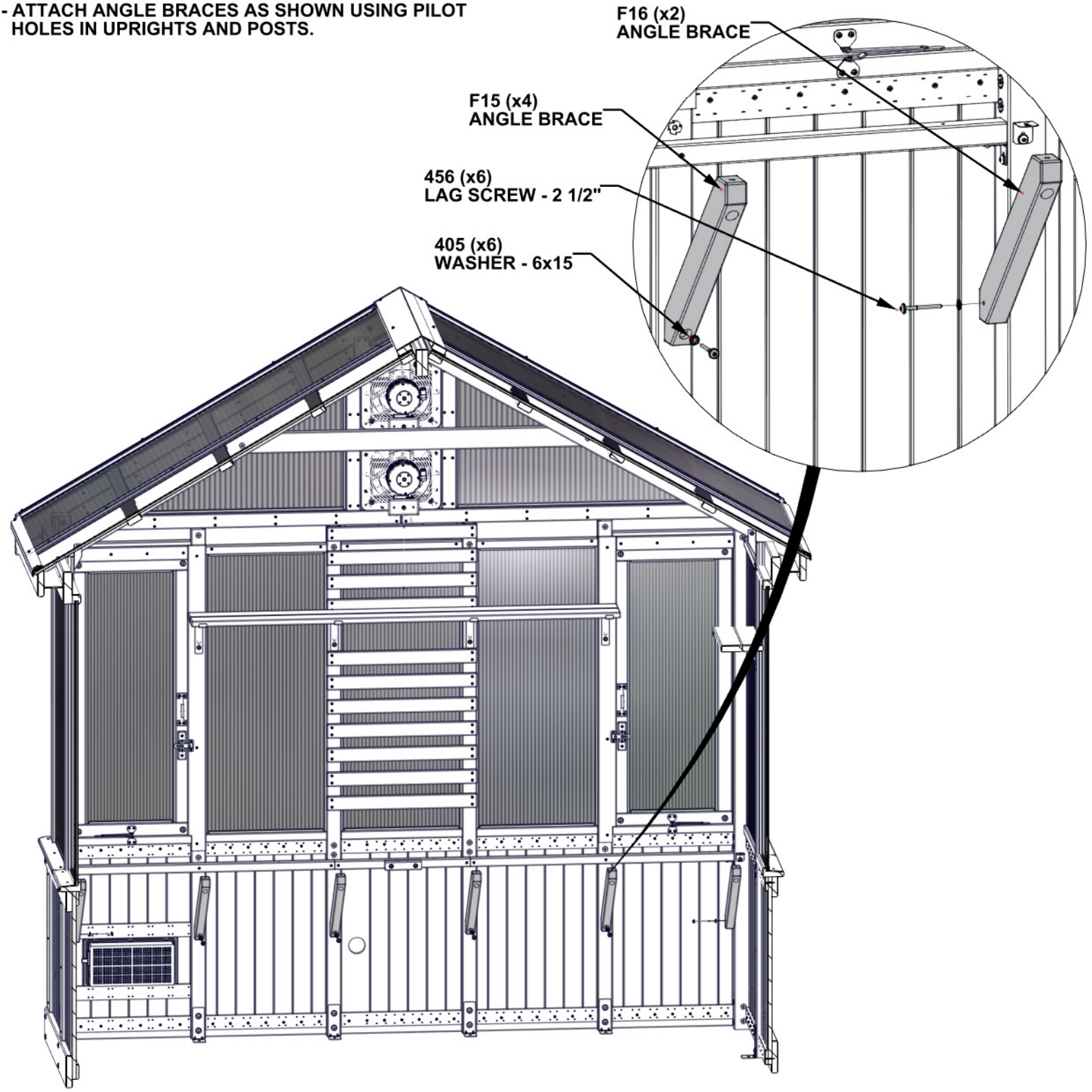

STEP 237 - TABLE ASSEMBLY

QTY	PART NUMBER	DESCRIPTION
4	H100362	SCREW PFH 8x3 BLK
3	H100405	WASHER LOCK EXT 6x15
3	H100456	LAG SCREW WH 1/4x2 1/2 BLK
1	H100460	LAG SCREW WH 1/4x1 BLK

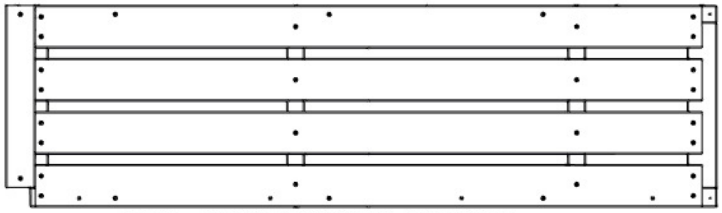

TB02 TABLE ASSEMBLY - W2A04533
(x1) 2 1/16"x16 1/16"x56 11/16" (52x408x1440)

- ATTACH TABLE ASSEMBLY AS SHOWN.
- ALIGN PILOT HOLES.

362 (x4)
SCREW - 3"

405 (x3)
WASHER - 6x15

460 (x1)
LAG SCREW - 1"

456 (x3)
LAG SCREW - 2 1/2"

TB02 (x1)
TABLE ASSEMBLY

STEP 238 - TABLE ASSEMBLY

QTY	PART NUMBER	DESCRIPTION
4	H100362	SCREW PFH 8x3 BLK
3	H100405	WASHER LOCK EXT 6x15
3	H100456	LAG SCREW WH 1/4x2 1/2 BLK
1	H100460	LAG SCREW WH 1/4x1 BLK

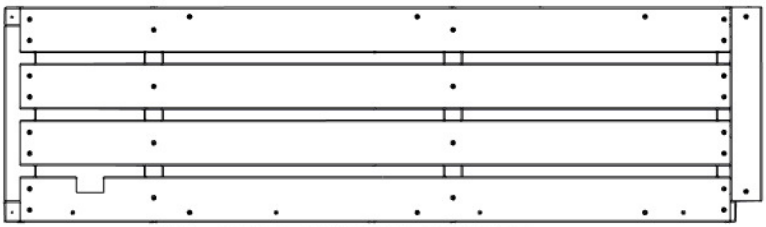

TB01 TABLE ASSEMBLY - W2A04532
(x1) 2 1/16"x16 1/16"x56 11/16" (52x408x1440)

- ATTACH TABLE ASSEMBLY AS SHOWN.
- ALIGN PILOT HOLES.

362 (x4)
SCREW - 3"

405 (x3)
WASHER - 6x15

460 (x1)
LAG SCREW - 1"

456 (x3)
LAG SCREW - 2 1/2"

TB01 (x1)
TABLE ASSEMBLY

STEP 239 - TABLE ASSEMBLY

QTY	PART NUMBER	DESCRIPTION
2	H100198	WASHER LOCK EXT 8x19
2	H100379	TNUT-5/16" BLK
2	H100391	SCREW PFH 8x2 BLK
2	H100480	BOLT WH 5/16x4 3/4 BLK

- INSERT T-NUTS FIRST

- ALIGN THROUGH HOLES IN TABLE ASSEMBLIES AND ATTACH HARDWARE.

- INSERT SCREWS AFTER OTHER HARDWARE HAS BEEN ATTACHED.

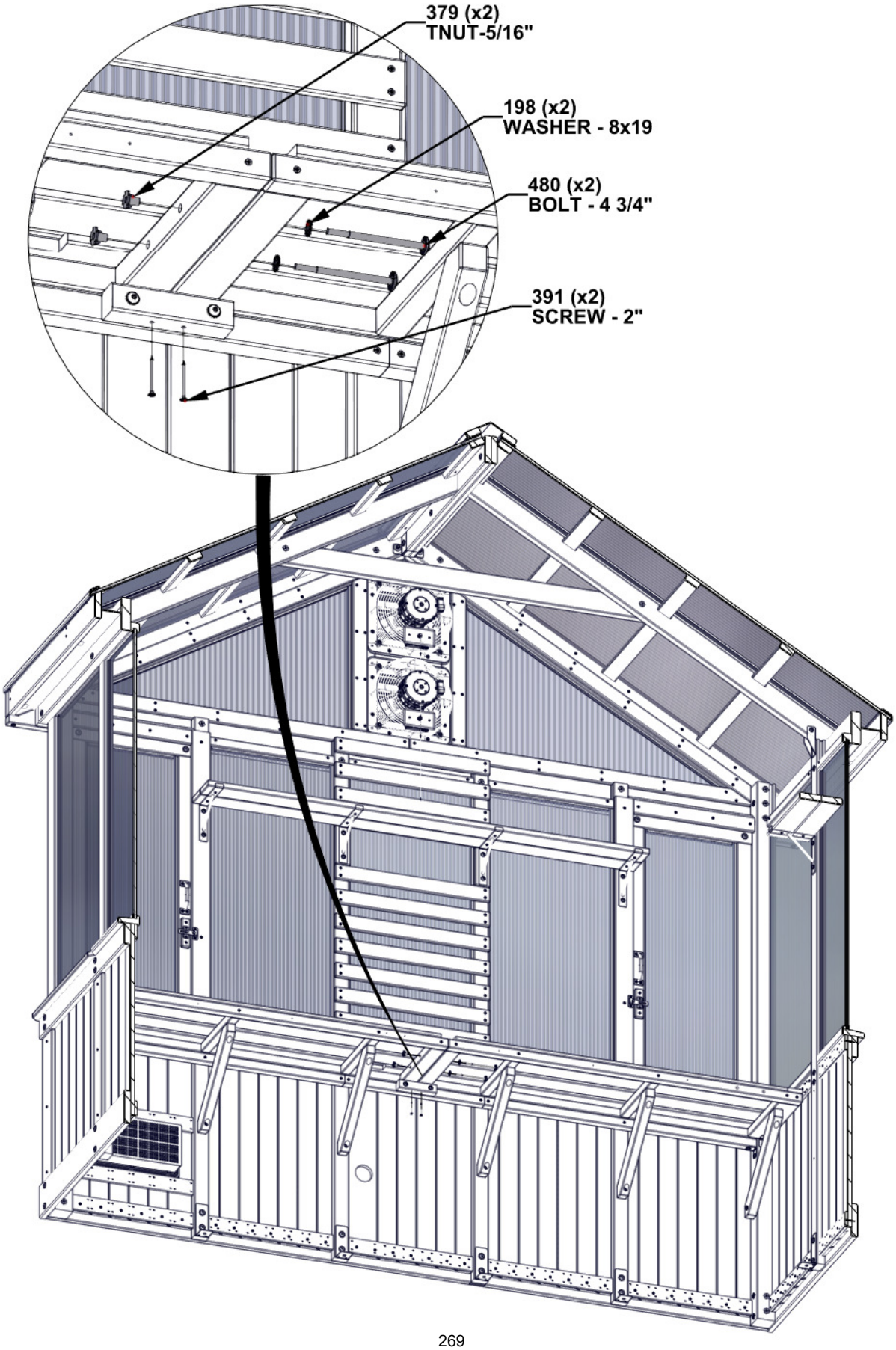

STEP 240 - TABLE ASSEMBLY

QTY	PART NUMBER	DESCRIPTION
4	H100387	SCREW PFH 8x1 1/4 BLK

N11 TABLE TOP SPLICE - W4L21304
(x1) 5/8"x2 3/8"x16 1/16" (16x60x408)

- ATTACH TABLE TOP SPLICE AS SHOWN.
- ALIGN PILOT HOLES

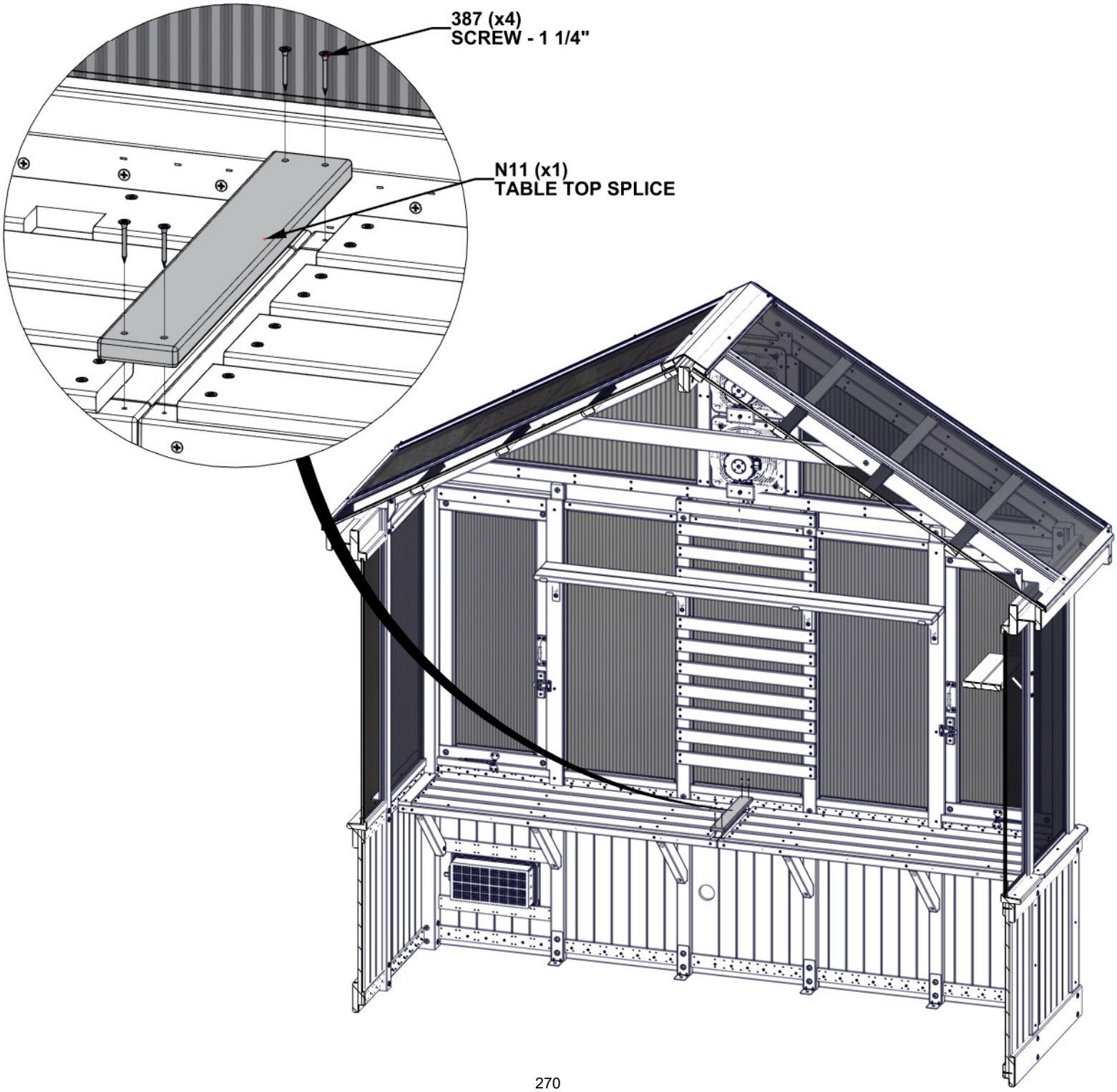

STEP 241 - TABLE ASSEMBLY

QTY	PART NUMBER	DESCRIPTION
4	H100398	TNUT-1/4" BLK
4	H100405	WASHER LOCK EXT 6x15
4	H101284	BOLT WH 1/4x2 3/4 BLK

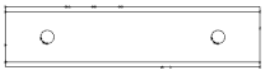

P07 TABLE CLEAT SPLICE - W4L21295
(x2) 1 7/16"x1 7/16"x6" (36x36x152)

P10 TABLE CLEAT - W4L21308
(x2) 1 7/16"x1 7/16"x43 9/16" (36x36x1107)

- INSERT T-NUTS FIRST

NOTE PILOT HOLES FOR CORRECT ORIENTATION.

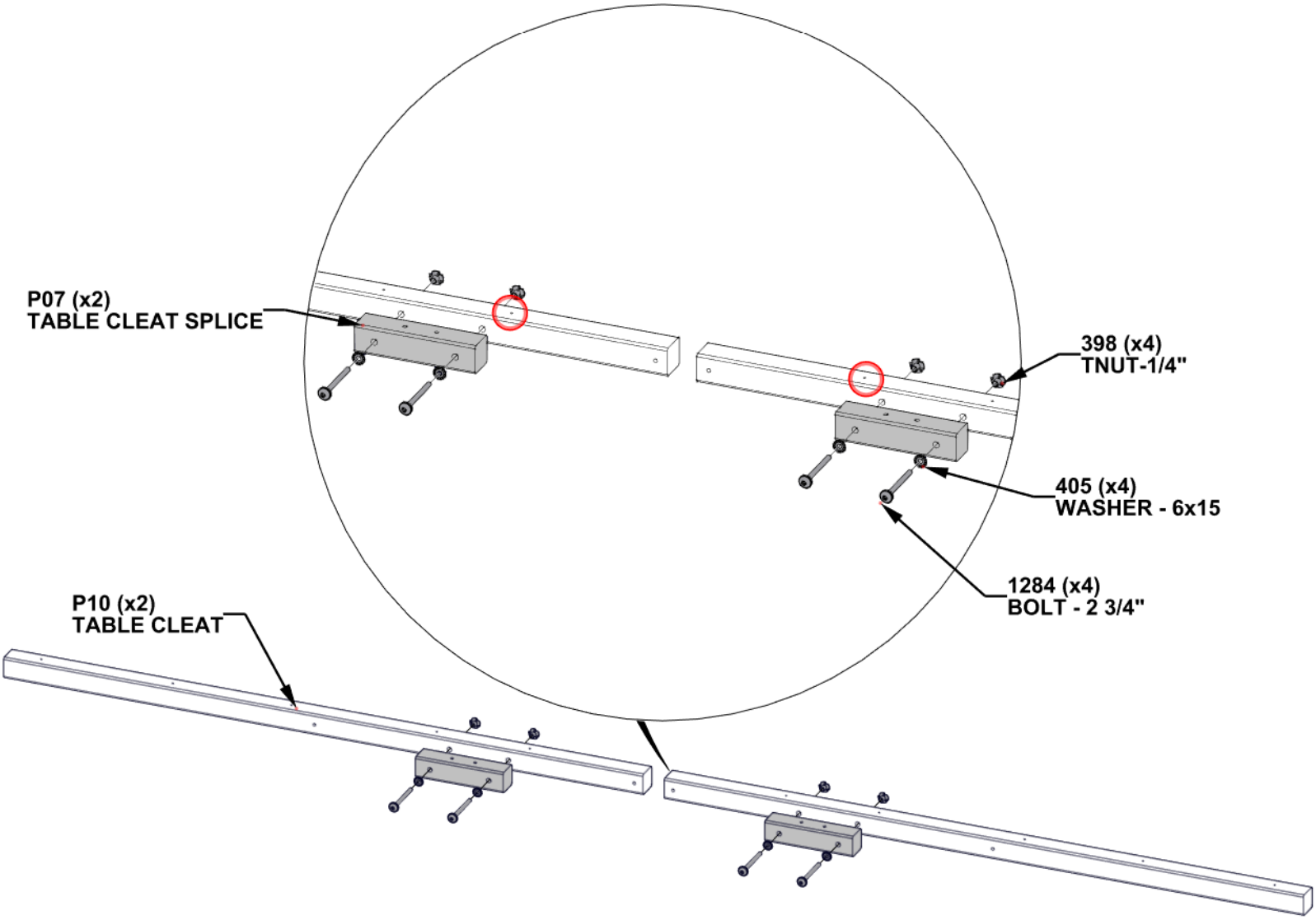

STEP 242 - TABLE ASSEMBLY

QTY	PART NUMBER	DESCRIPTION
6	H100201	SCREW PFH 8x2 1/2 BLK

P11 TABLE CLEAT - W4L21309
(x1) 1 7/16"x1 7/16"x22 3/8" (36x36x569)

- INSTALL TABLE CLEATS USING PILOT HOLES IN UPRIGHTS.
- NOTE PILOT HOLES FOR CORRECT ORIENTATION OF BOARDS.

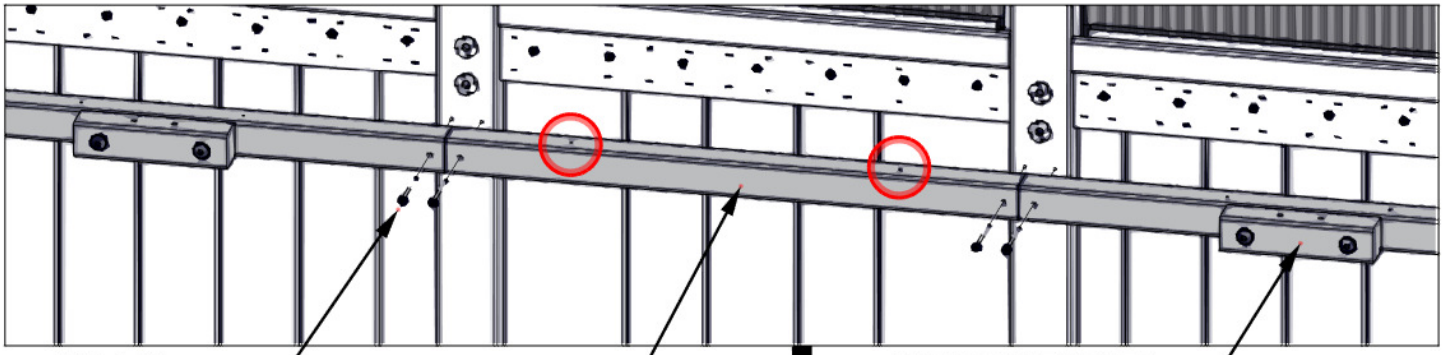

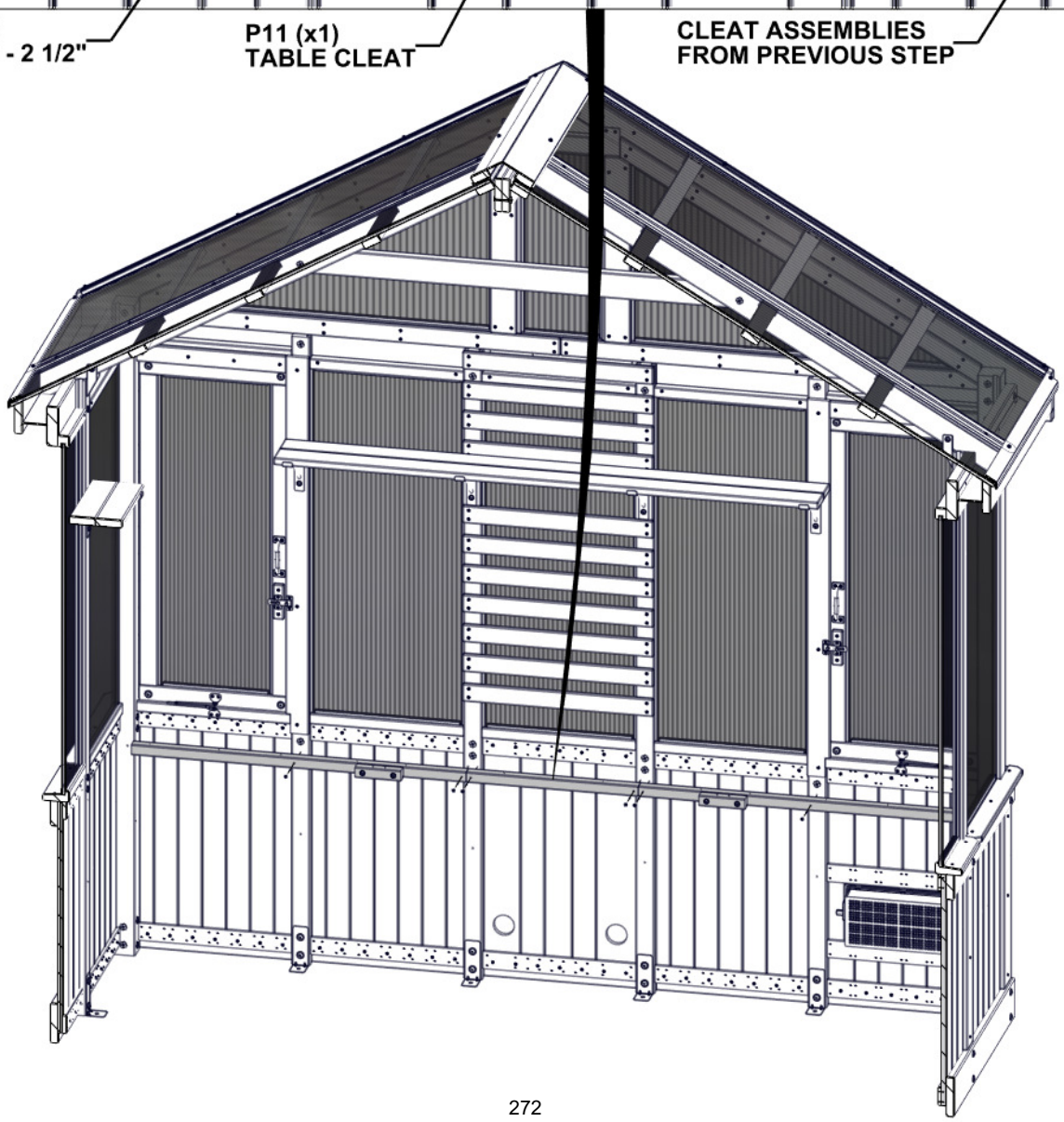

STEP 243 - TABLE ASSEMBLY

QTY	PART NUMBER	DESCRIPTION
6	H100460	LAG SCREW WH 1/4x1 BLK

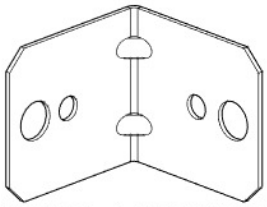

A4M00555 L BRACKET BLK
(x4)

- ATTACH BRACKETS AS SHOWN USING PILOT HOLES IN POSTS AND CLEATS.

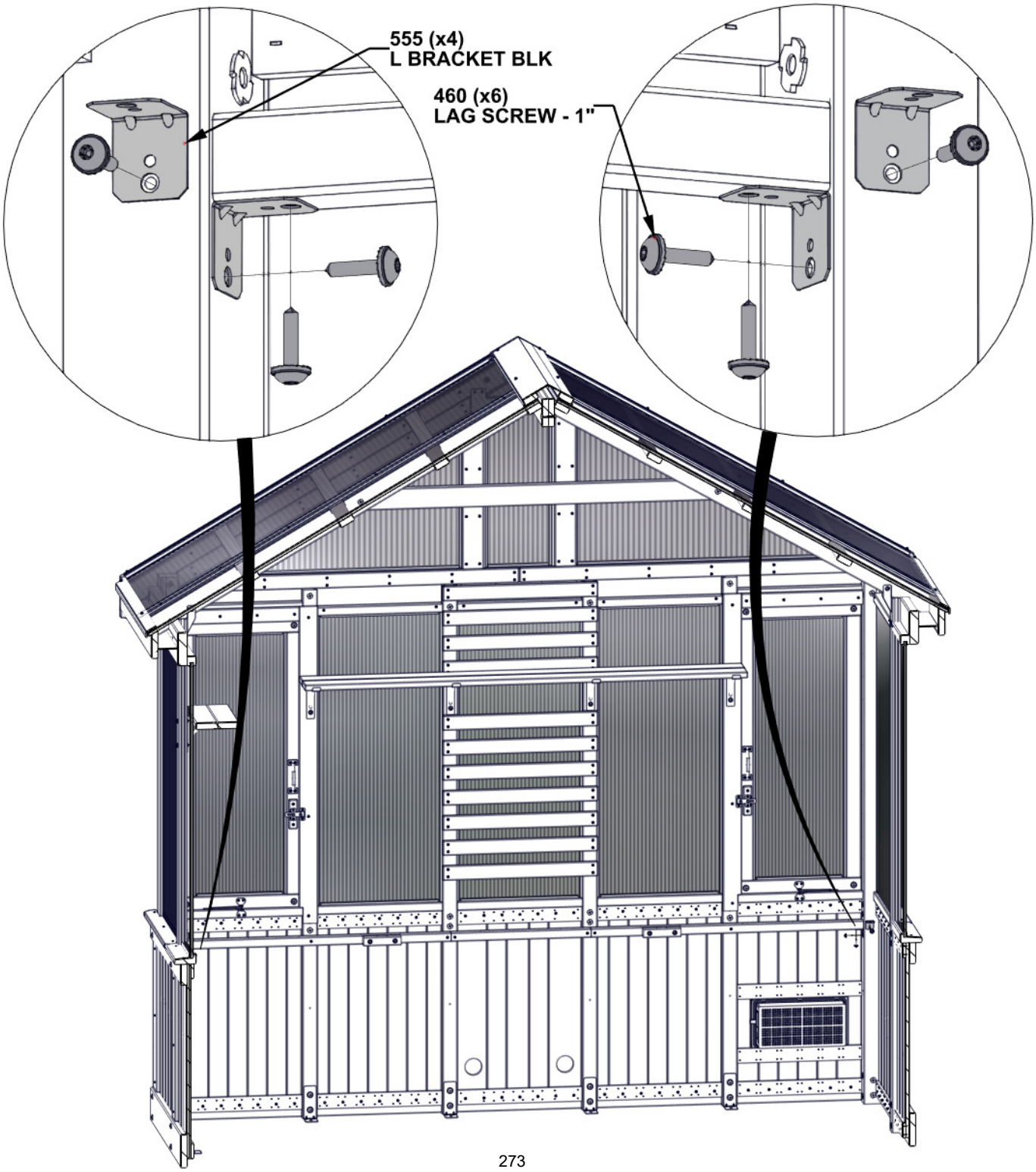

STEP 244 - TABLE ASSEMBLY

QTY	PART NUMBER	DESCRIPTION
6	H100405	WASHER LOCK EXT 6x15
6	H100456	LAG SCREW WH 1/4x2 1/2 BLK

F15 ANGLE BRACE - W4L21301
(x4) 1 7/16"x2 3/8"x18 1/16" (36x60x458)

F16 ANGLE BRACE - W4L21302
(x2) 1 7/16"x2 3/8"x18 1/16" (36x60x458)

- ATTACH ANGLE BRACES AS SHOWN USING PILOT HOLES IN UPRIGHTS AND POSTS.

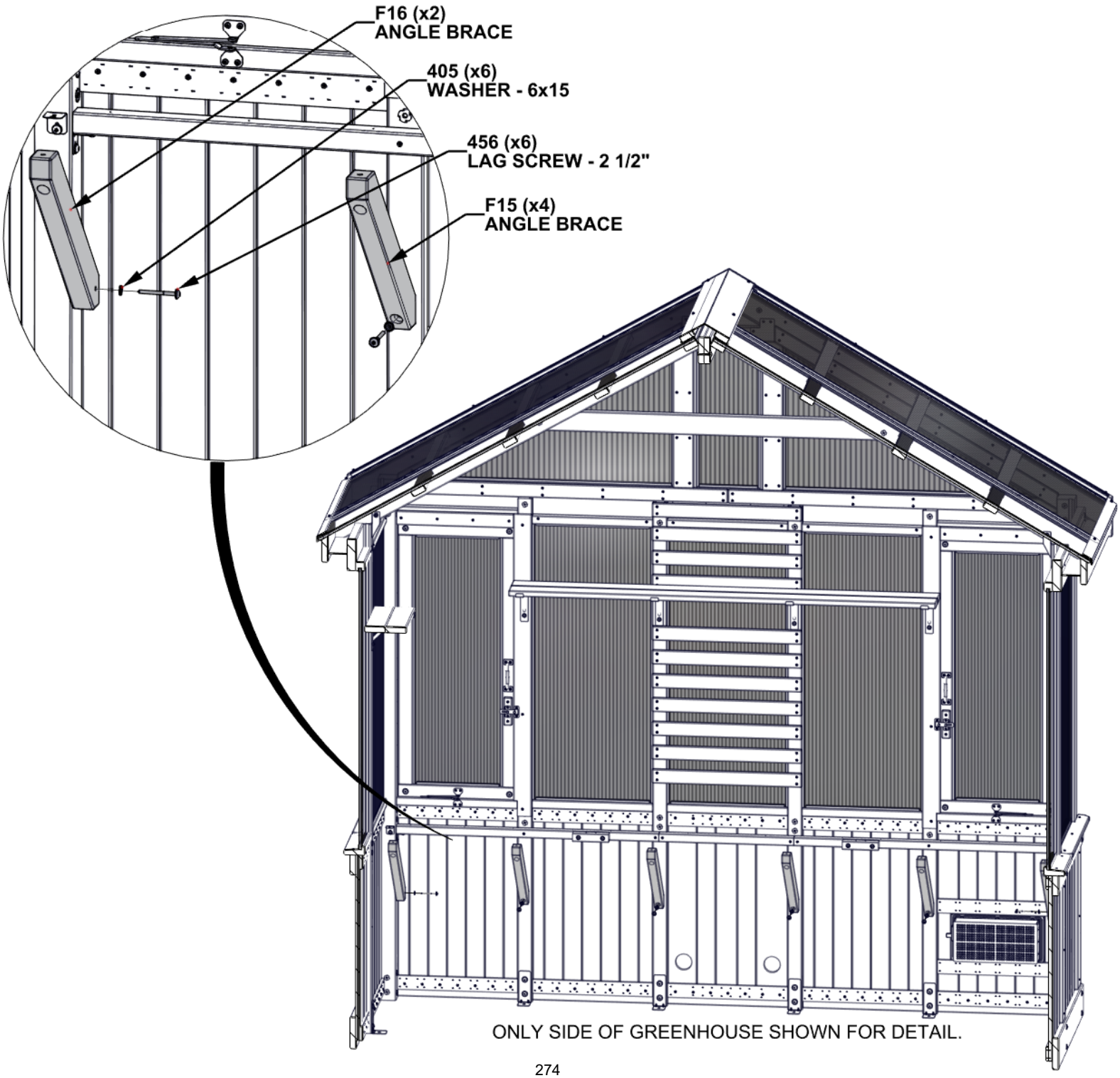

ONLY SIDE OF GREENHOUSE SHOWN FOR DETAIL.

STEP 245 - TABLE ASSEMBLY

QTY	PART NUMBER	DESCRIPTION
4	H100362	SCREW PFH 8x3 BLK
2	H100405	WASHER LOCK EXT 6x15
2	H100456	LAG SCREW WH 1/4x2 1/2 BLK
1	H100460	LAG SCREW WH 1/4x1 BLK

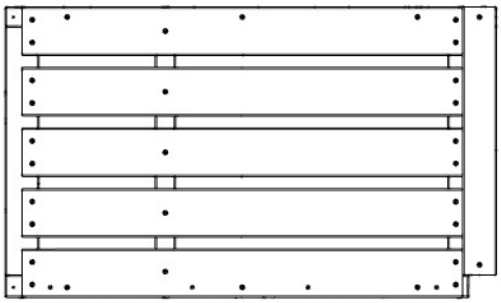

TB07 (x1) TABLE ASSEMBLY - W2A04538
2 1/16"x20 1/4"x34 5/16" (52x515x871)

- ATTACH TABLE ASSEMBLY AS SHOWN.
- ALIGN PILOT HOLES.

405 (x2)
WASHER - 6x15

362 (x4)
SCREW - 3"

460 (x1)
LAG SCREW - 1"

456 (x2)
LAG SCREW - 2 1/2"

TB07 (x1)
TABLE ASSEMBLY

ONLY SIDE OF GREENHOUSE SHOWN FOR DETAIL.

STEP 246 - TABLE ASSEMBLY

QTY	PART NUMBER	DESCRIPTION
4	H100362	SCREW PFH 8x3 BLK
2	H100405	WASHER LOCK EXT 6x15
2	H100456	LAG SCREW WH 1/4x2 1/2 BLK

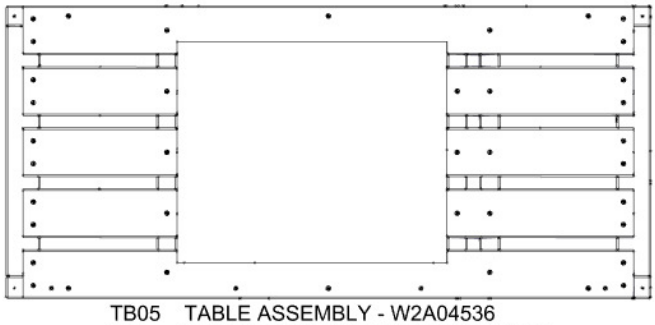

TB05 TABLE ASSEMBLY - W2A04536
(x1) 2 1/16"x20 1/4"x44 3/4" (52x515x1136)

- ATTACH TABLE ASSEMBLY AS SHOWN.

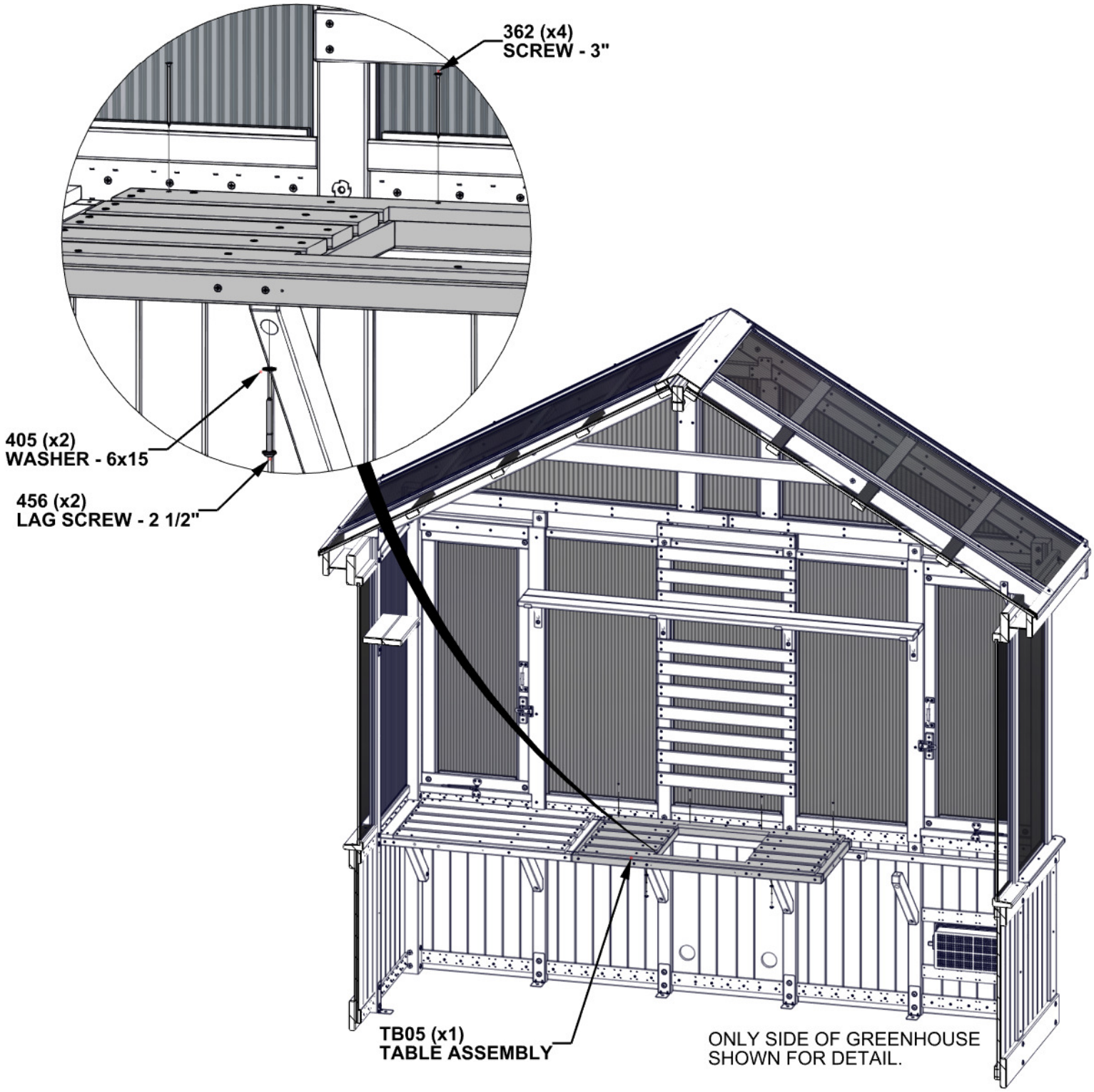

STEP 247 - TABLE ASSEMBLY

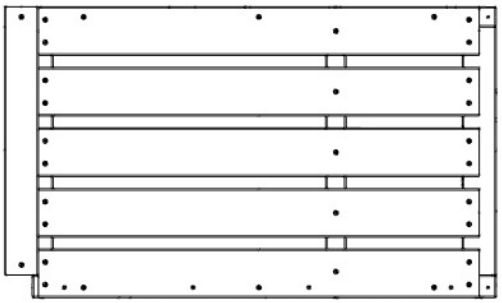

TB06 TABLE ASSEMBLY - W2A04537
(x1) 2 1/16"x20 1/4"x34 5/16" (52x515x871)

QTY	PART NUMBER	DESCRIPTION
4	H100362	SCREW PFH 8x3 BLK
2	H100405	WASHER LOCK EXT 6x15
2	H100456	LAG SCREW WH 1/4x2 1/2 BLK
1	H100460	LAG SCREW WH 1/4x1 BLK

- ATTACH TABLE ASSEMBLY AS SHOWN.
- ALIGN PILOT HOLES.

362 (x4)
SCREW - 3"

405 (x2)
WASHER - 6x15

460 (x1)
LAG SCREW - 1"

456 (x2)
LAG SCREW - 2 1/2"

TB06 (x1)
TABLE ASSEMBLY

ONLY SIDE OF GREENHOUSE
SHOWN FOR DETAIL.

STEP 248 - TABLE ASSEMBLY

QTY	PART NUMBER	DESCRIPTION
4	H100198	WASHER LOCK EXT 8x19
4	H100379	TNUT-5/16" BLK
4	H100391	SCREW PFH 8x2 BLK
4	H100480	BOLT WH 5/16x4 3/4 BLK

- INSERT T-NUTS FIRST

- ALIGN THROUGH HOLES IN TABLE ASSEMBLIES AND ATTACH HARDWARE.

- INSERT SCREWS AFTER OTHER HARDWARE HAS BEEN ATTACHED.

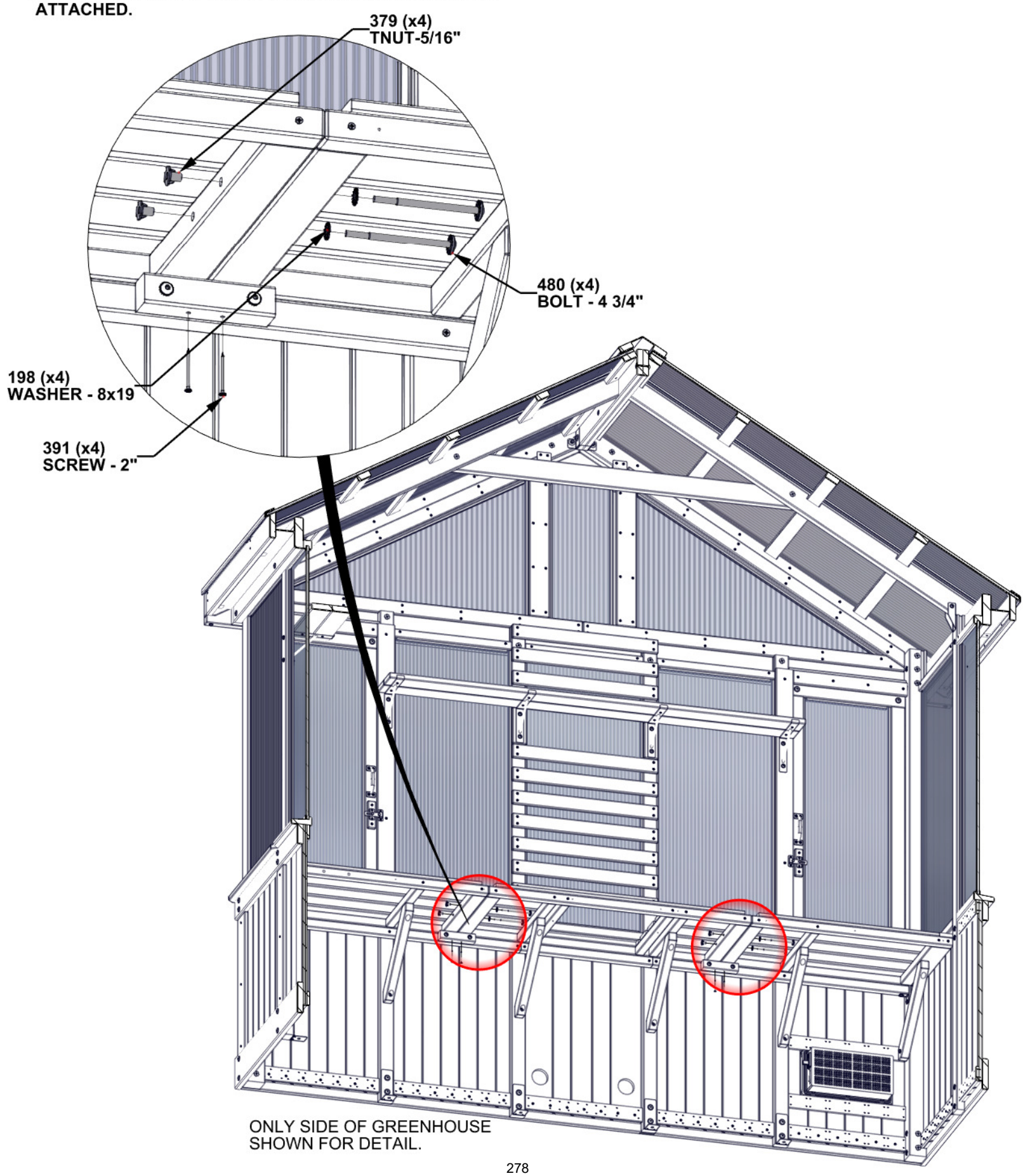

ONLY SIDE OF GREENHOUSE SHOWN FOR DETAIL.

STEP 249 - TABLE ASSEMBLY

QTY	PART NUMBER	DESCRIPTION
8	H100387	SCREW PFH 8x1 1/4 BLK

N12 TABLE TOP SPLICE - W4L21312
(x2) 5/8"x2 3/8"x20 1/4" (16x60x515)

- ATTACH TABLE TOP SPLICE AS SHOWN.
- ALIGN PILOT HOLES.

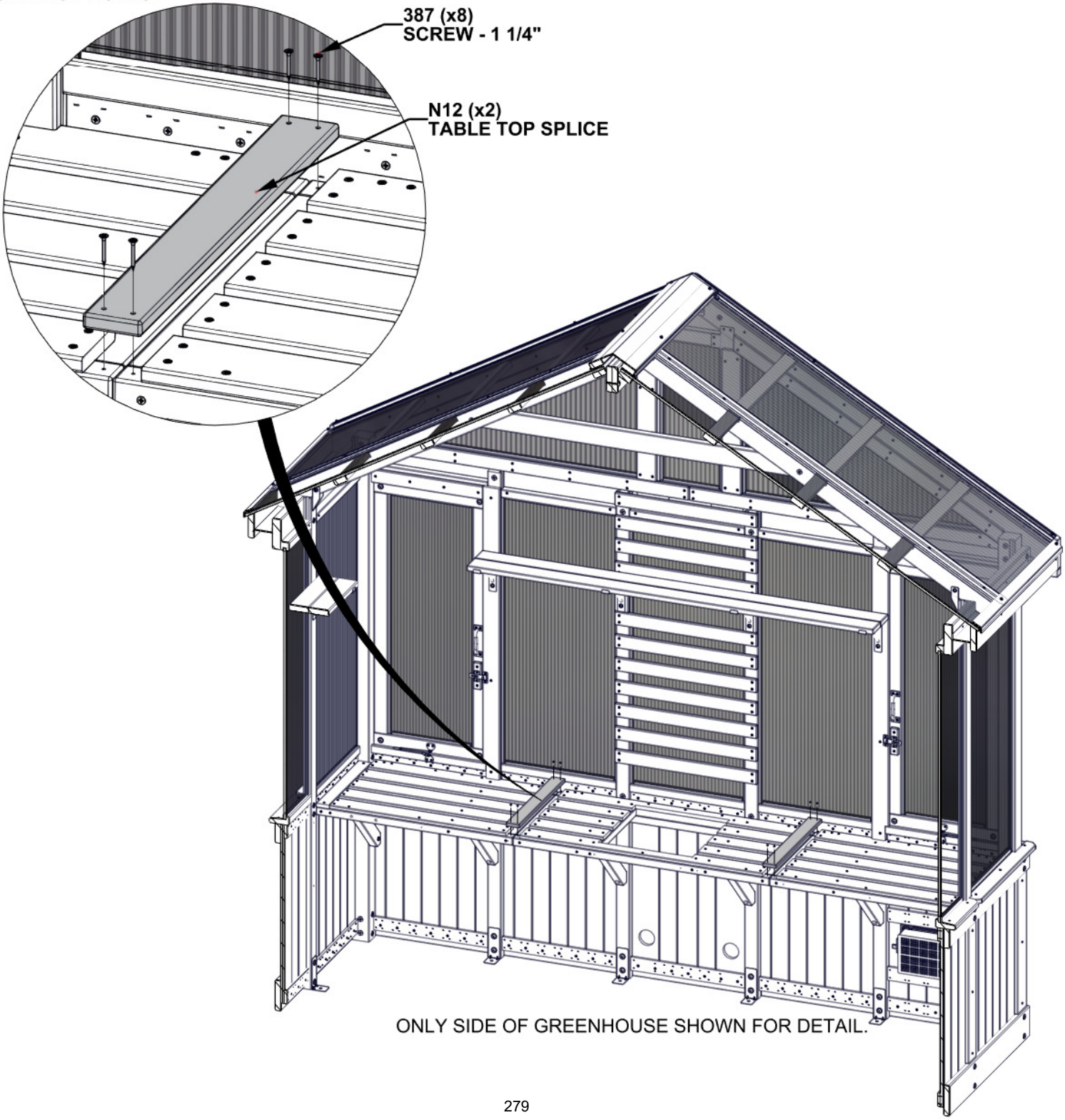

ONLY SIDE OF GREENHOUSE SHOWN FOR DETAIL.

STEP 250 - TABLE ASSEMBLY

QTY	PART NUMBER	DESCRIPTION
7	H100201	SCREW PFH 8x2 1/2 BLK

P09 TABLE CLEAT - W4L21305
(x2) 1 7/16"x1 7/16"x65 1/4" (36x36x1658)

- NOTE PILOT HOLES FOR CORRECT ORIENTATION OF CLEATS.

- ATTACH USING PILOT HOLES IN UPRIGHTS.

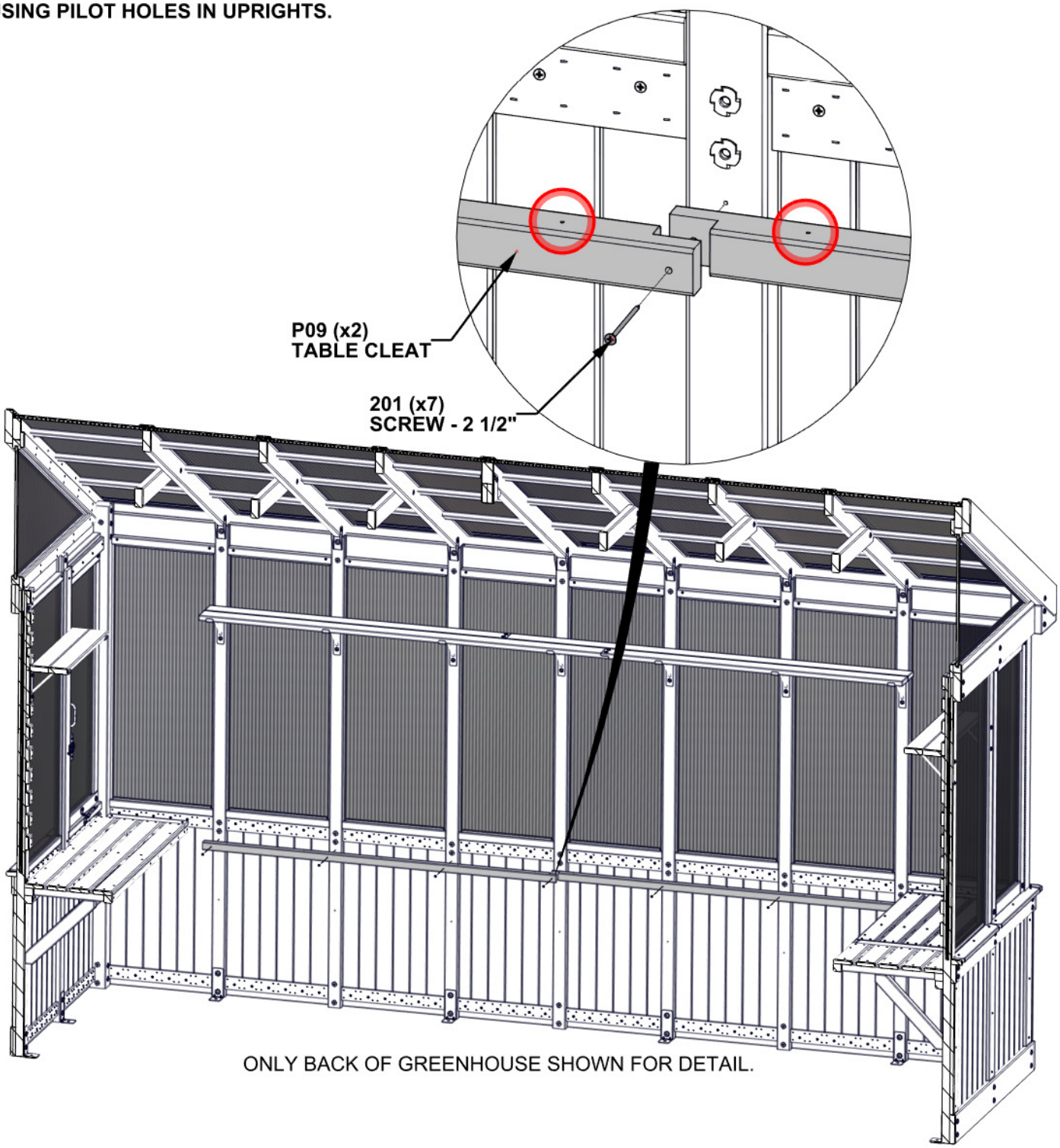

ONLY BACK OF GREENHOUSE SHOWN FOR DETAIL.

STEP 251 - TABLE ASSEMBLY

QTY	PART NUMBER	DESCRIPTION
6	H100405	WASHER LOCK EXT 6x15
6	H100456	LAG SCREW WH 1/4x2 1/2 BLK

F15 ANGLE BRACE - W4L21301
(x6) 1 7/16"x2 3/8"x18 1/16" (36x60x458)

- ATTACH ANGLE BRACES AS SHOWN USING PILOT HOLES IN UPRIGHTS.

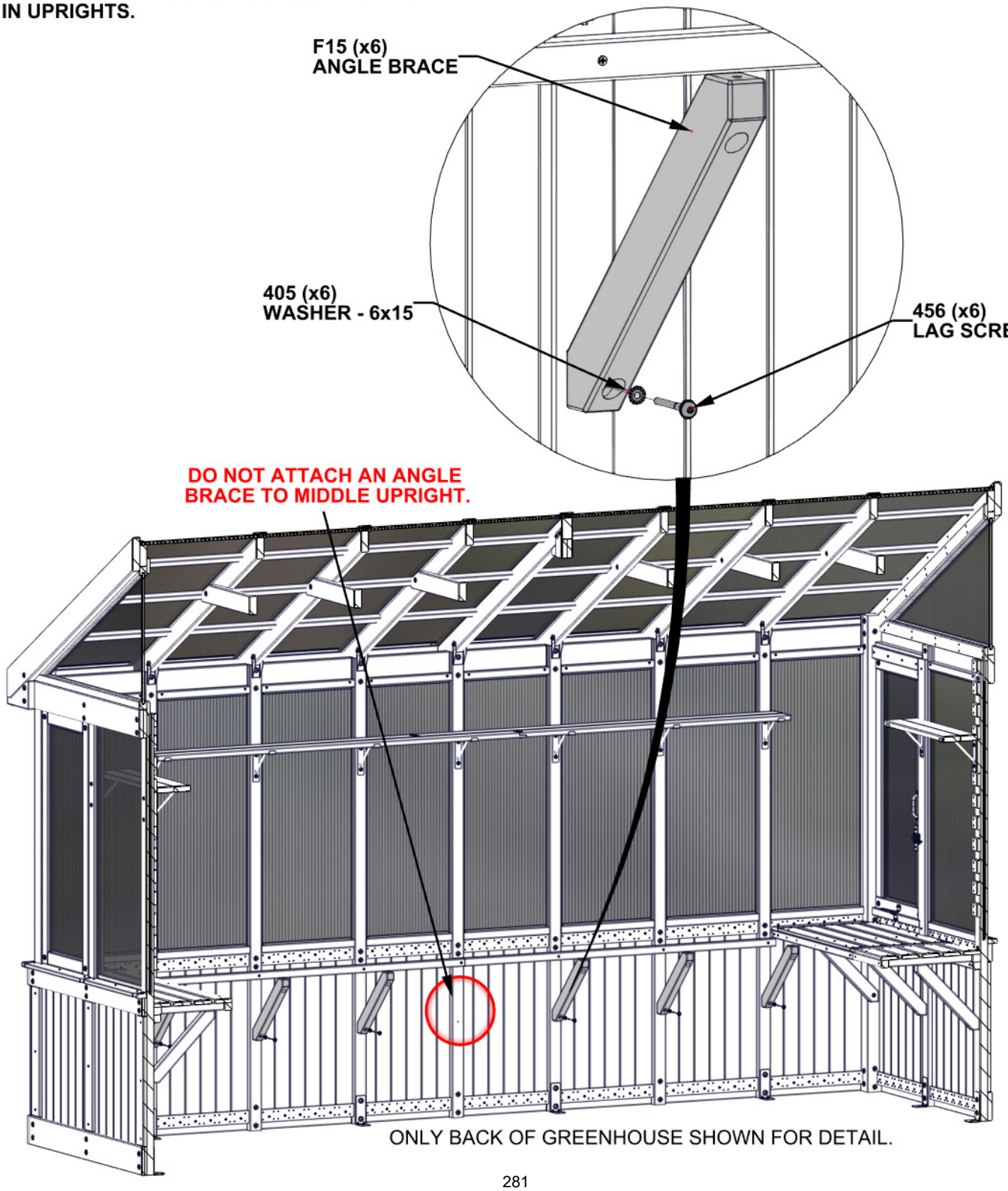

ONLY BACK OF GREENHOUSE SHOWN FOR DETAIL.

STEP 252A - TABLE ASSEMBLY

QTY	PART NUMBER	DESCRIPTION
2	H100379	T-NUT 5/16 BLK

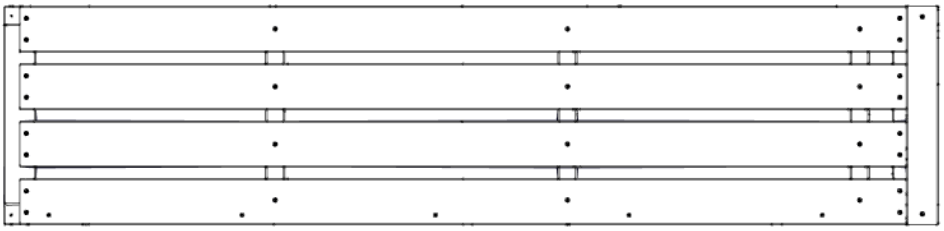

TB04 TABLE ASSEMBLY - W2A04535
(x1) 2 1/16"x16 1/16"x68 3/4" (52x408x1746)

- INSERT T-NUTS FIRST.

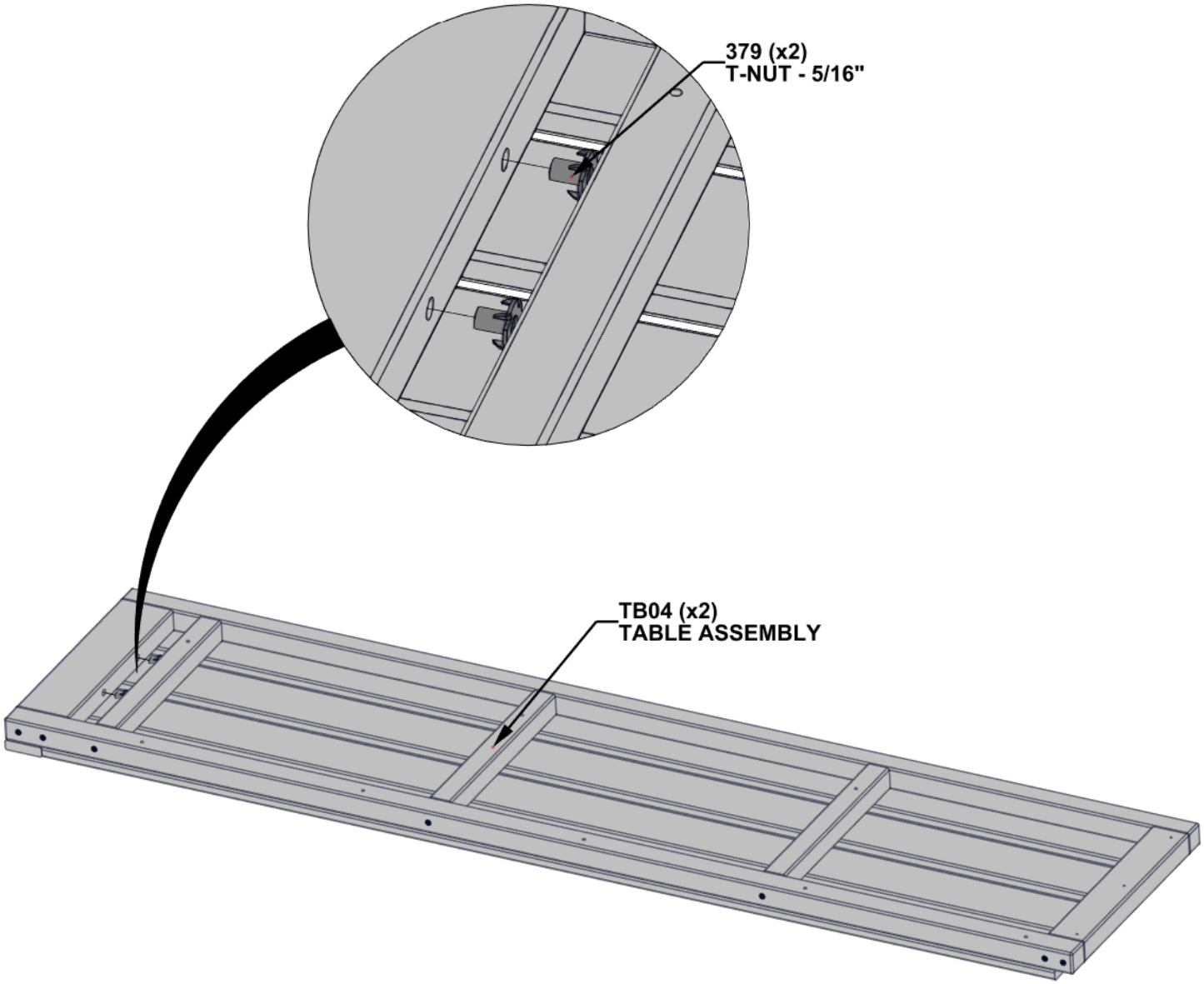

STEP 252B - TABLE ASSEMBLY

QTY	PART NUMBER	DESCRIPTION
5	H100362	SCREW PFH 8x3 BLK
3	H100405	WASHER LOCK EXT 6x15
3	H100456	LAG SCREW WH 1/4x2 1/2 BLK

- ATTACH TABLE ASSEMBLY AS SHOWN.

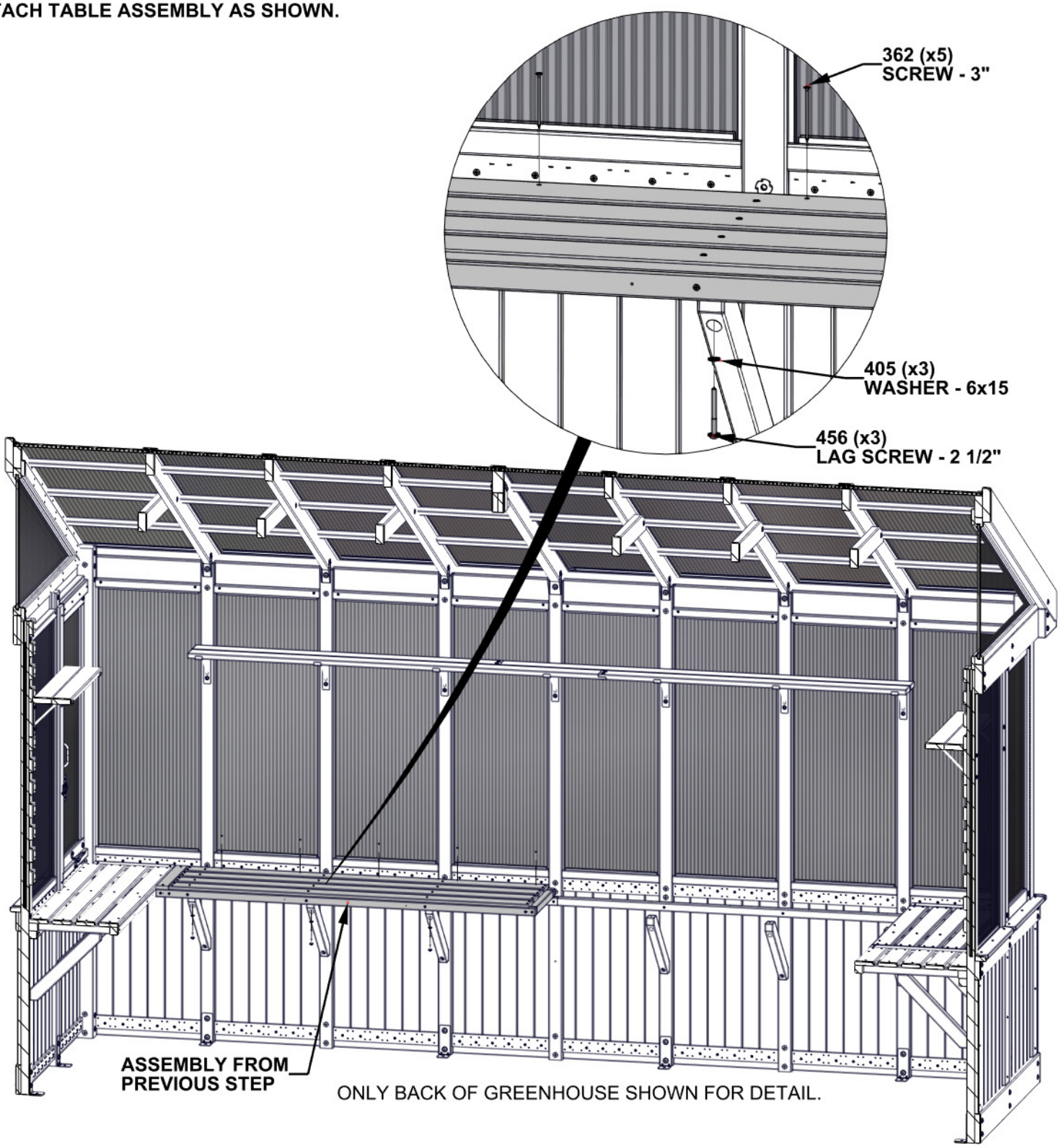

ONLY BACK OF GREENHOUSE SHOWN FOR DETAIL.

STEP 253 - TABLE ASSEMBLY

QTY	PART NUMBER	DESCRIPTION
5	H100362	SCREW PFH 8x3 BLK
3	H100405	WASHER LOCK EXT 6x15
3	H100456	LAG SCREW WH 1/4x2 1/2 BLK

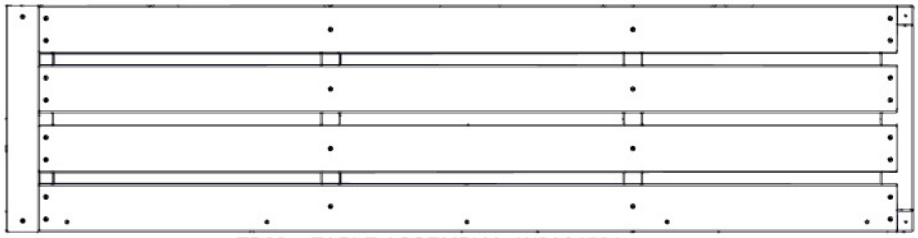

TB03 TABLE ASSEMBLY - W2A04534
(x1) 2 1/16"x16 1/16"x64 1/2" (52x408x1639)

- ATTACH TABLE ASSEMBLY AS SHOWN.

362 (x5)
SCREW - 3"

405 (x3)
WASHER - 6x15

456 (x3)
LAG SCREW - 2 1/2"

ONLY BACK OF GREENHOUSE SHOWN FOR DETAIL.

TB03 (x1)
TABLE ASSEMBLY

STEP 254 - TABLE ASSEMBLY

QTY	PART NUMBER	DESCRIPTION
6	H100201	SCREW PFH 8x2 1/2 BLK

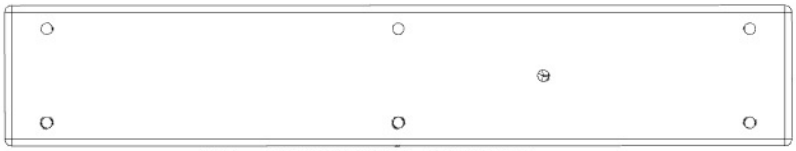

F17 TABLE SPLICE - W4L21306
(x1) 1 7/16"x2 3/8"x13 1/4" (36x60x336)

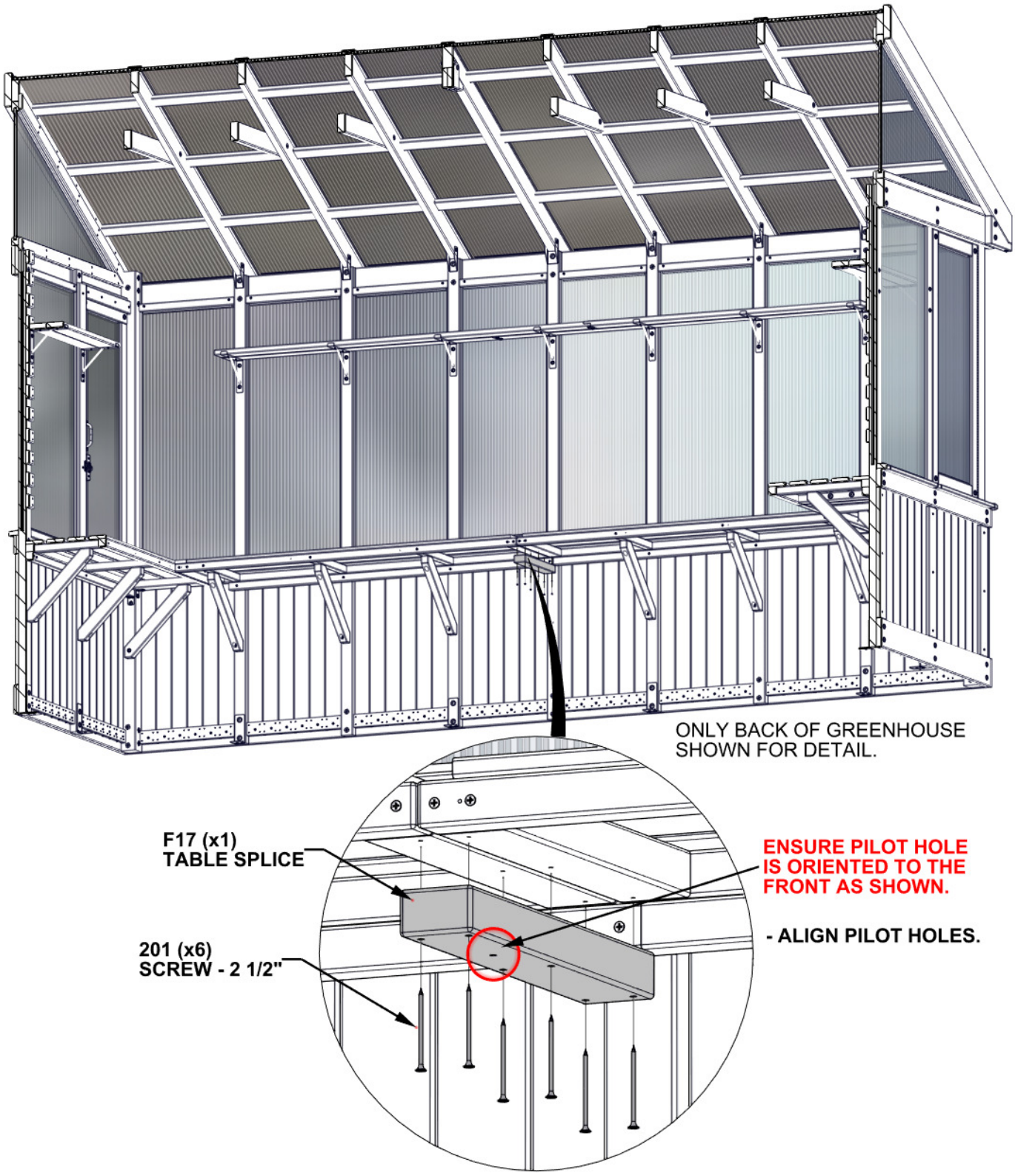

STEP 255 - TABLE ASSEMBLY

QTY	PART NUMBER	DESCRIPTION
2	H100405	WASHER LOCK EXT 6x15
2	H100456	LAG SCREW WH 1/4x2 1/2 BLK

F18 ANGLE BRACE - W4L21307
(x1) 1 7/16"x2 3/8"x17" (36x60x432)

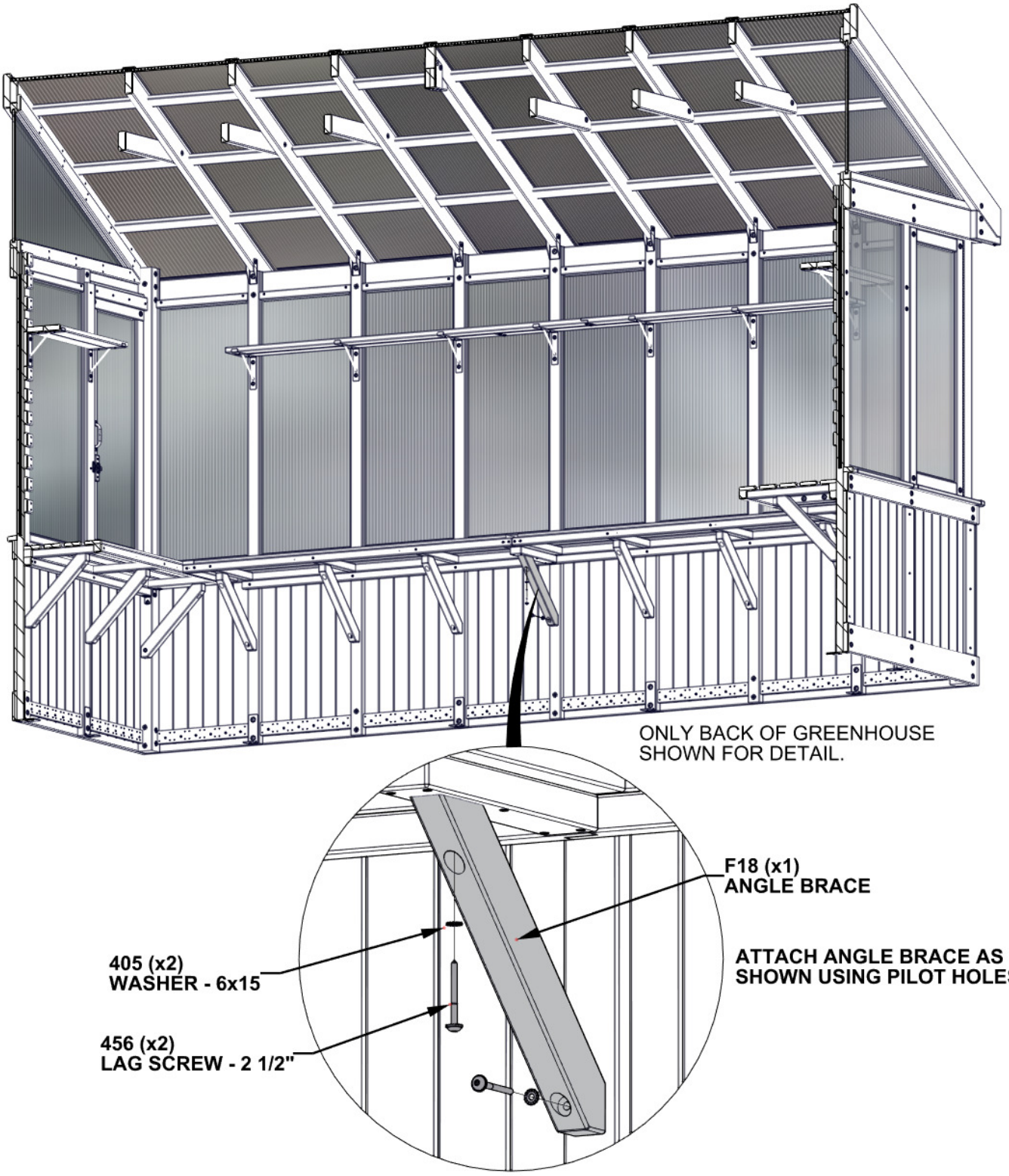

STEP 256 - TABLE ASSEMBLY

QTY	PART NUMBER	DESCRIPTION
4	H100198	WASHER LOCK EXT 8x19
2	H100379	T-NUT 5/16 BLK
4	H100480	BOLT WH 5/16x4 3/4 BLK

- INSERT T-NUTS FIRST.

- ALIGN THROUGH HOLES IN TABLE ASSEMBLIES AND ATTACH HARDWARE.

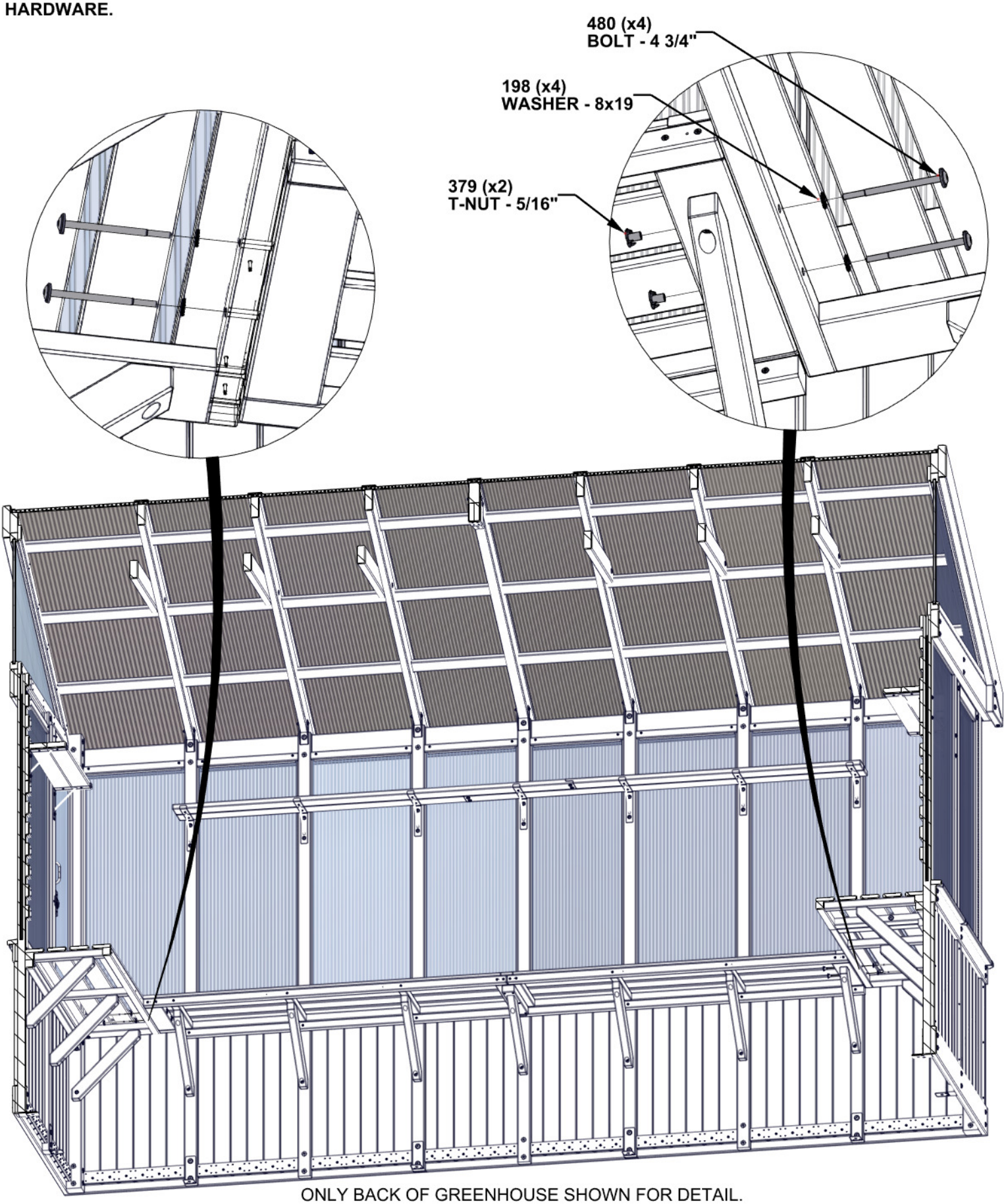

ONLY BACK OF GREENHOUSE SHOWN FOR DETAIL.

STEP 257 - TABLE ASSEMBLY

QTY	PART NUMBER	DESCRIPTION
4	H100387	SCREW PFH 8x1 1/4 BLK

N11 TABLE TOP SPLICE - W4L21304
(x1) 5/8"x2 3/8"x16 1/16" (16x60x408)

- ATTACH TABLE TOP SPLICE AS SHOWN.
- ALIGN PILOT HOLES.

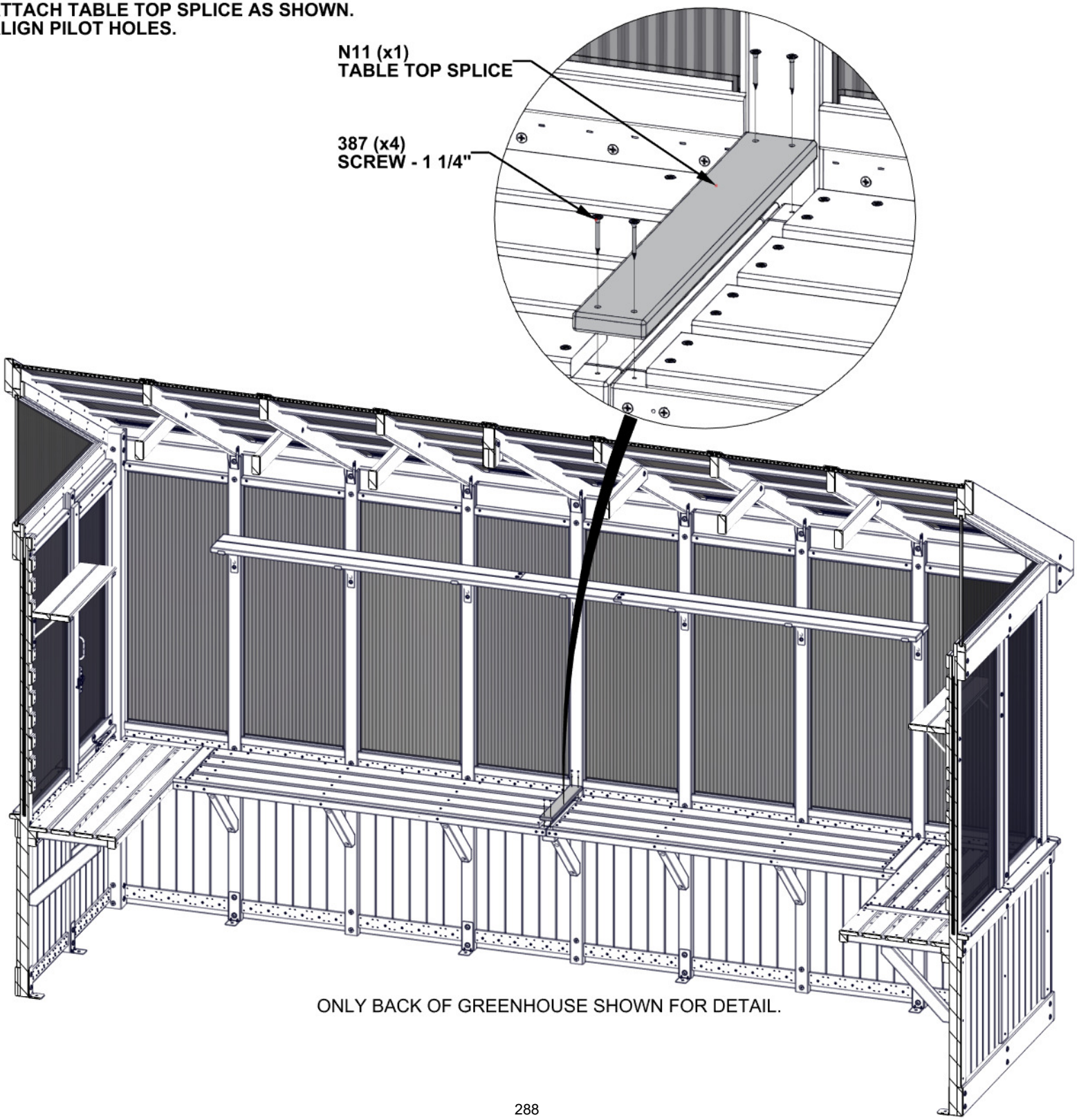

ONLY BACK OF GREENHOUSE SHOWN FOR DETAIL.

STEP 258A - SINK ASSEMBLY

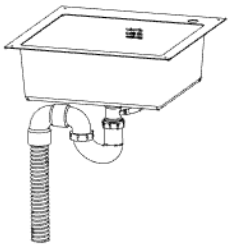

A4M04527 SINK ASSEMBLY
(x1)

1. INSTALLING THE SINK DRAIN

- SET DRAIN INSIDE OF SINK BODY, PLACING FOAM GASKET BETWEEN SURFACES.
- FASTEN IN PLACE USING RUBBER GASKET AND DRAIN NUT FROM BOTTOM SIDE.

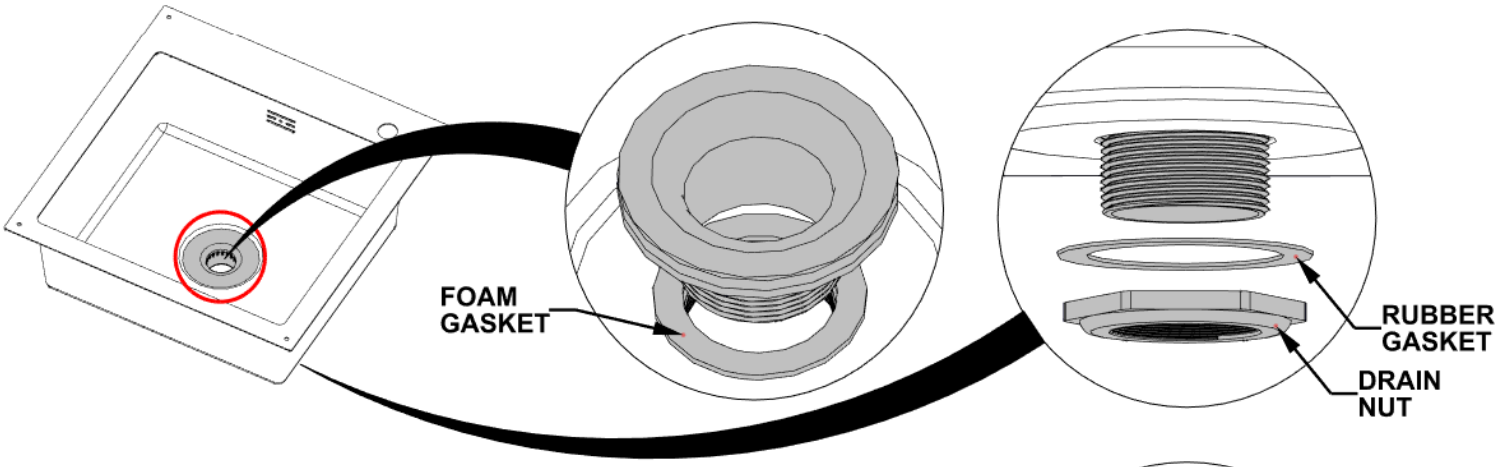

2. INSTALLING THE DRAIN FITTING

- ATTACH DRAIN FITTING TO SINK DRAIN.

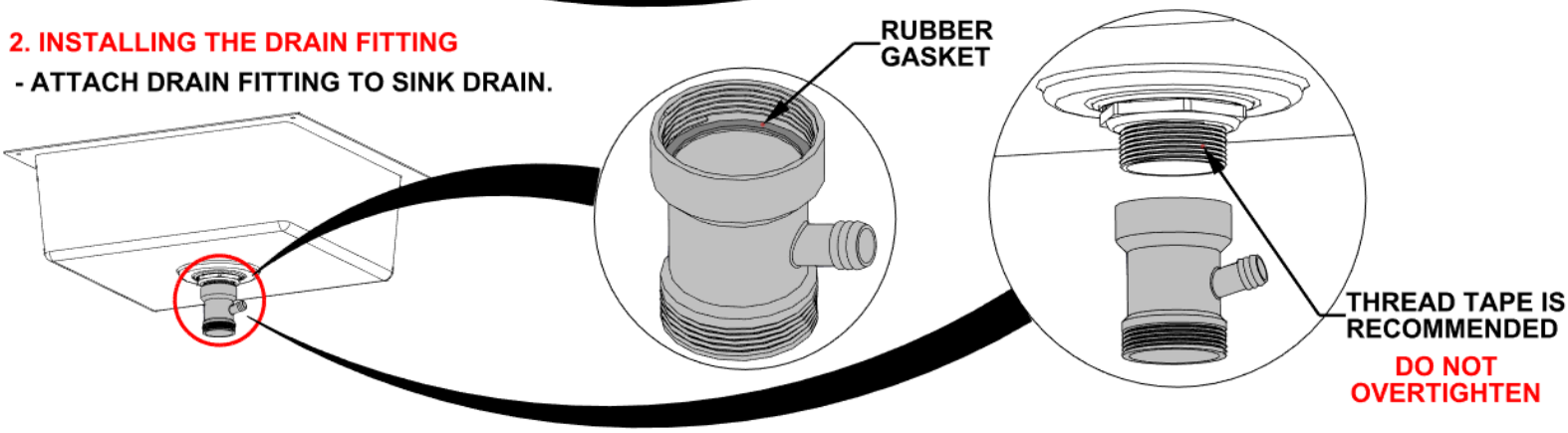

3. INSTALLING THE OVERFLOW DRAIN

- MAKE SURE RUBBER GASKET IS INSTALLED IN OVERFLOW DRAIN.
- INSERT DRAIN SCREW TO HOLD IN PLACE.

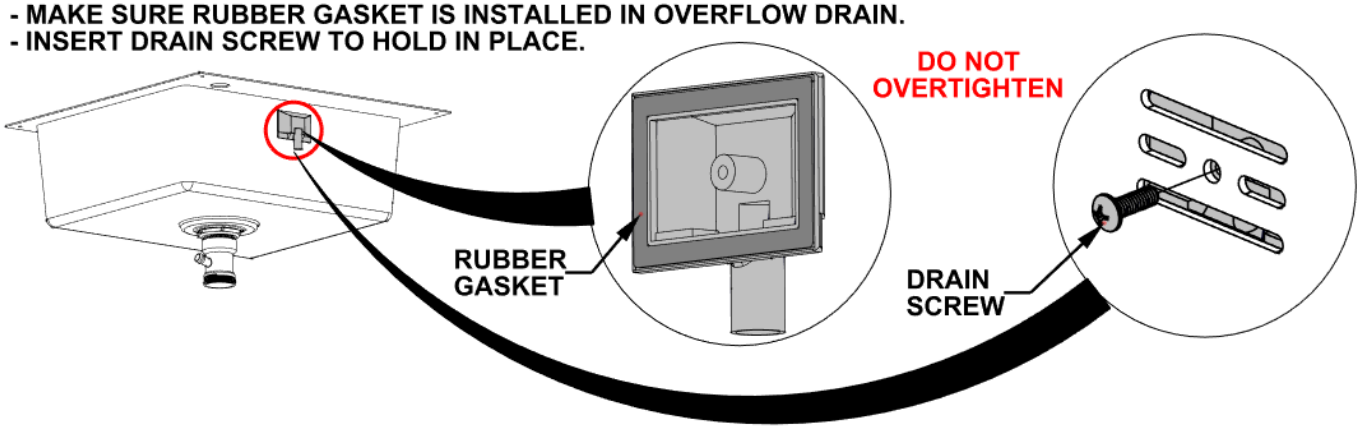

STEP 258B - SINK ASSEMBLY

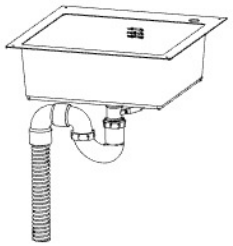

A4M04527 SINK ASSEMBLY
(x1)

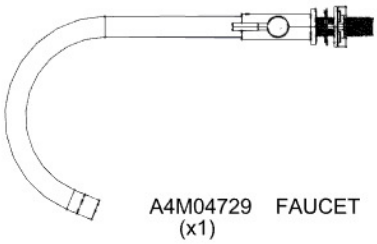

A4M04729 FAUCET
(x1)

4. INSTALLING THE OVERFLOW DRAIN

- ATTACH OVERFLOW DRAIN BY CONNECTION EACH END AS SHOWN.

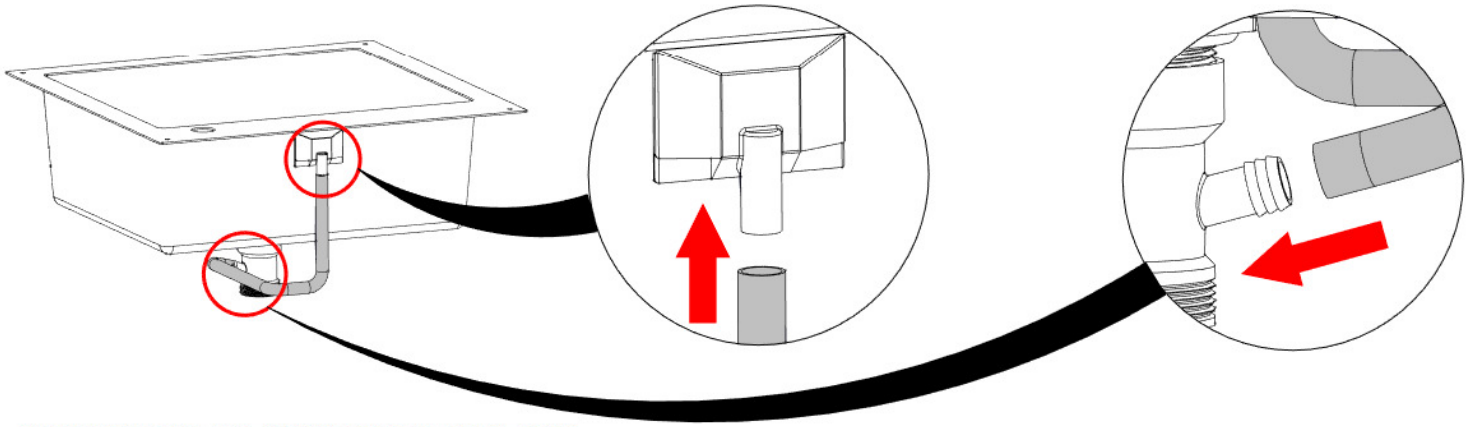

5. INSTALLING THE MAIN DRAIN AND TRAP

- ATTACH TRAP AND CORRUGATED DRAIN HOSE TO DRAIN FITTING.

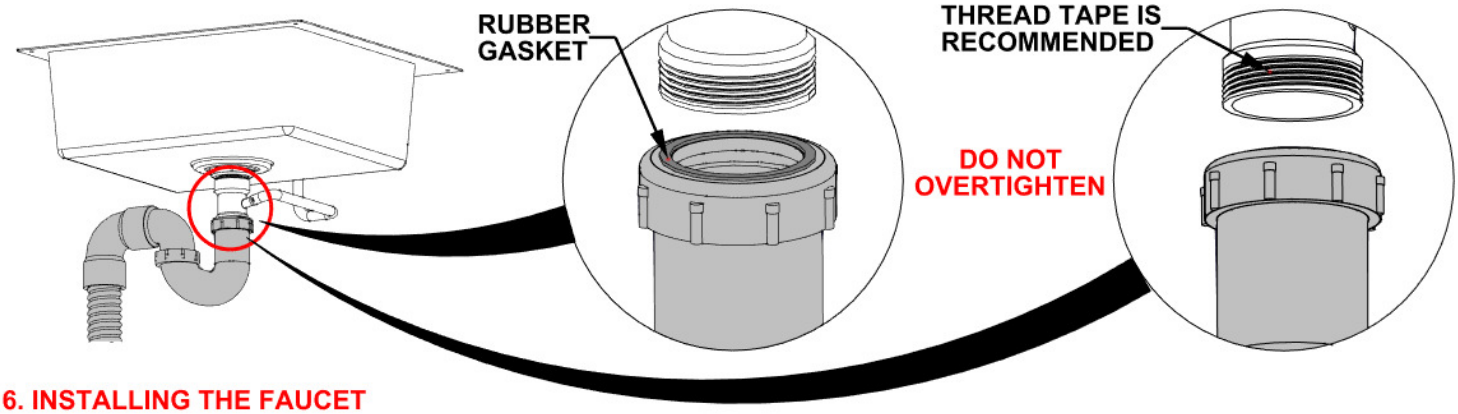

6. INSTALLING THE FAUCET

- INSERT FAUCET THROUGH HOLE IN SINK AND INSTALL COMPONENTS IN ORDER SHOWN.
- TIGHTEN FAUCET NUT UNTIL SNUG, THEN TIGHTEN FAUCET SCREWS.

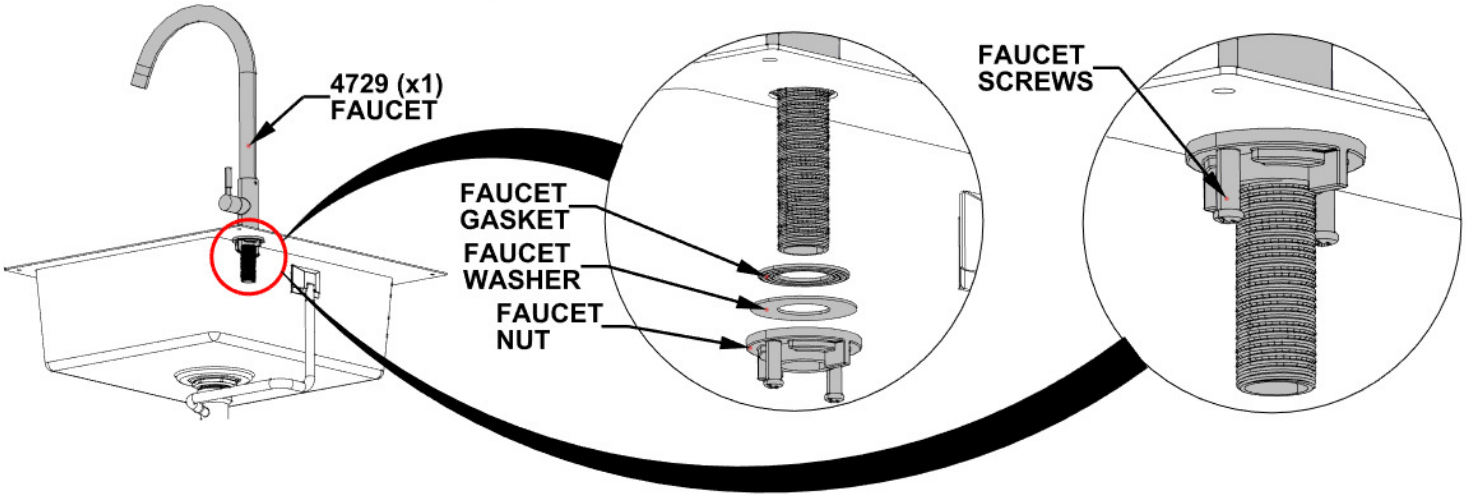

STEP 259 - SINK ASSEMBLY

QTY	PART NUMBER	DESCRIPTION
4	H101069	SCREW PWH 8x7/8 BLK

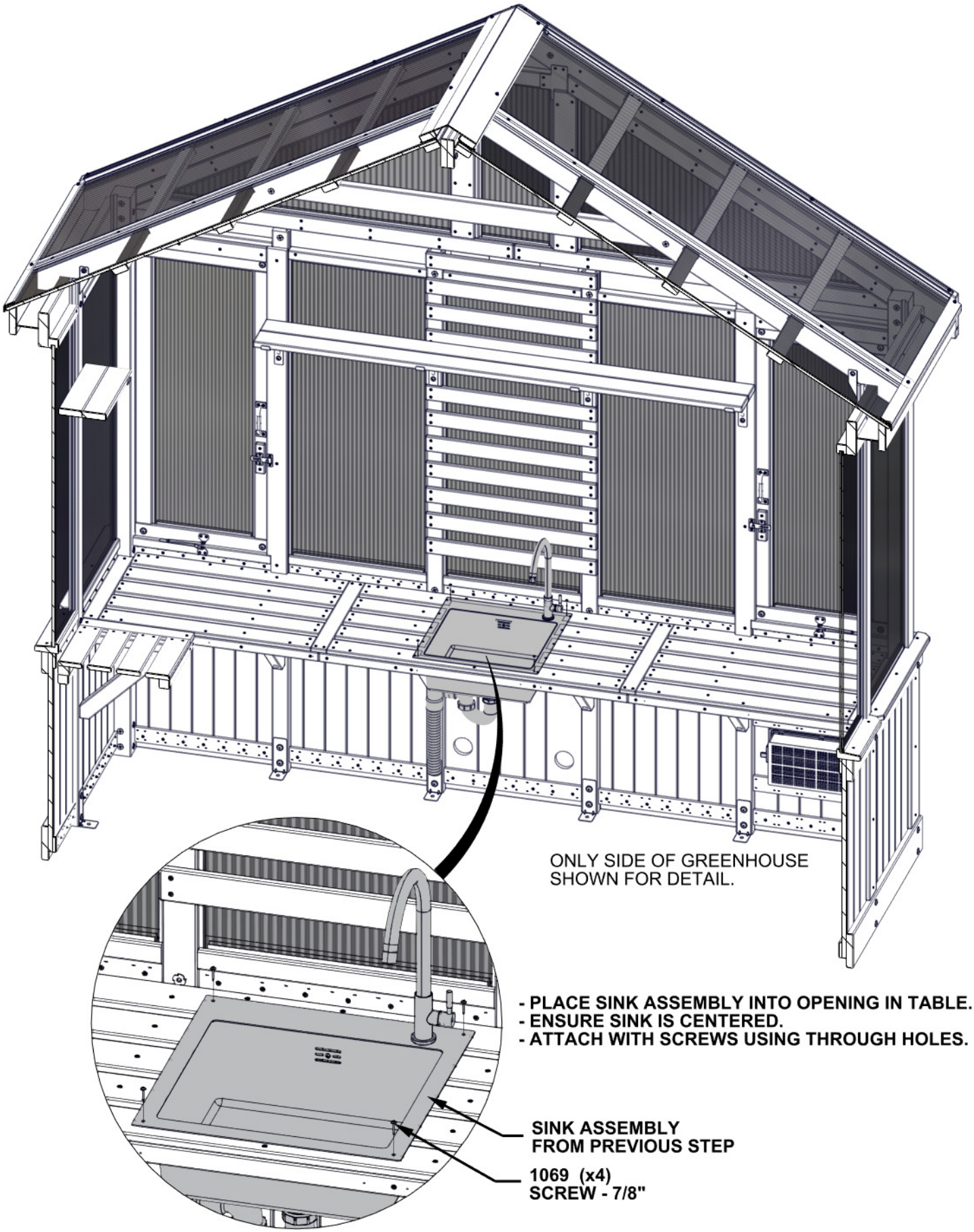

STEP 260 - SINK ASSEMBLY

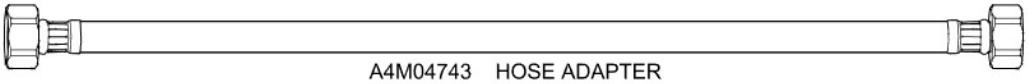

A4M04743 HOSE ADAPTER
(x1)

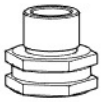

A4M03151 GARDEN HOSE ADAPTER
(x1)

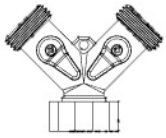

A4M05927 HOSE SPLITTER
(x1)

- ATTACH HOSE SPLITTER TO GARDEN HOSE ADAPTER.
- ATTACH GARDEN HOSE ADAPTER TO HOSE ADAPTER.
- ATTACH OTHER END OF HOSE ADAPTER TO SINK.

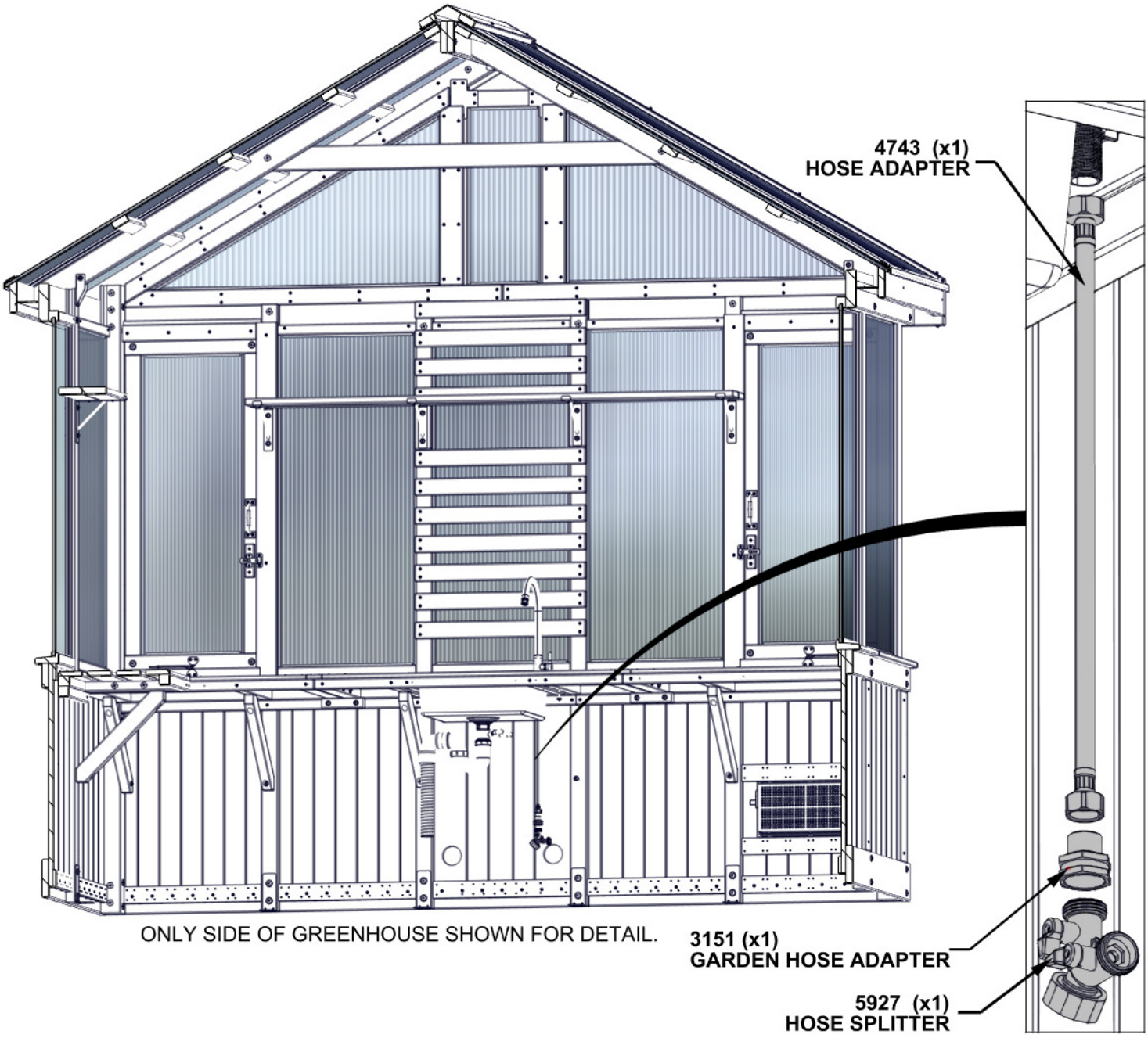

ONLY SIDE OF GREENHOUSE SHOWN FOR DETAIL.

STEP 261A - WATER LINE ASSEMBLY

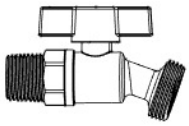

A4M02384 (x1) HOSE FAUCET

A6P00649 (x1) THREADED PIPE CONNECTOR

A6P00646 (x2) ELBOW 1/2" NPT

A6P00809 (x1) PLUMBERS TAPE

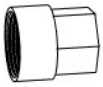

A6P00648 (x1) THREADED HOSE FITTING

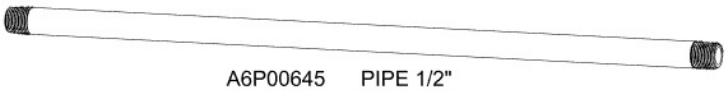

A6P00645 (x1) PIPE 1/2" SCH40 X 24"

- USE PLUMBERS TAPE AND WRAP THREADS OF MALE FITTINGS.
- FASTEN FITTINGS TO FORM THE COMPLETED WATER LINE ASSEMBLY BELOW

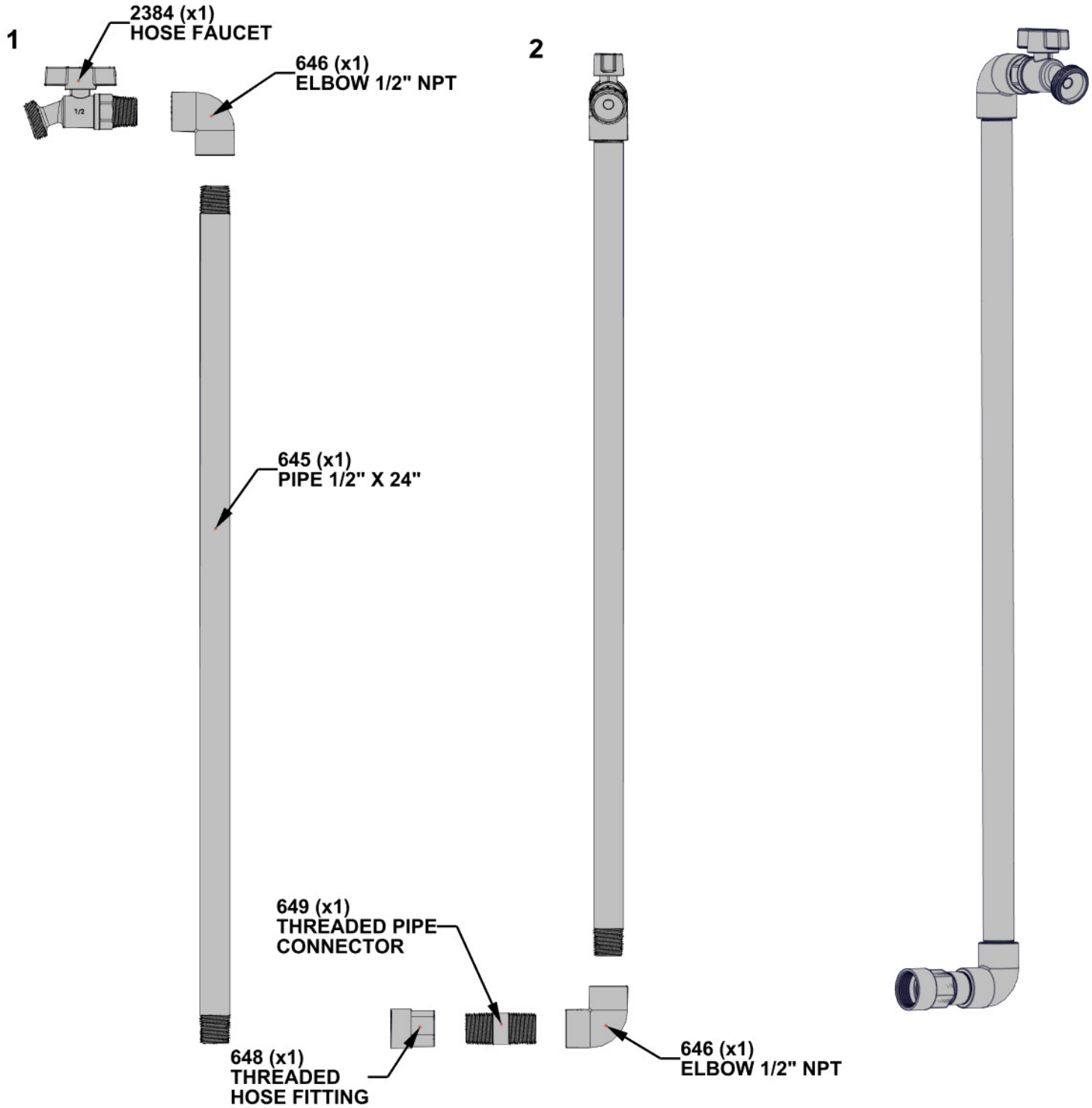

STEP 261B - WATER LINE ASSEMBLY

QTY	PART NUMBER	DESCRIPTION
2	H100385	SCREW PFH 8x1 BLK

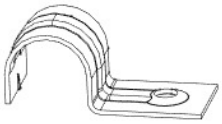

A4M02385 PIPE CLAMP
(x2)

- SECURE WATER LINE TO POST WITH PIPE CLAMPS APPROXIMATELY AS SHOWN BELOW.
- PRE-DRILL WITH AN 1/8" [3mm] DRILL BIT WITH CLAMPS LINED UP IN POSITION.

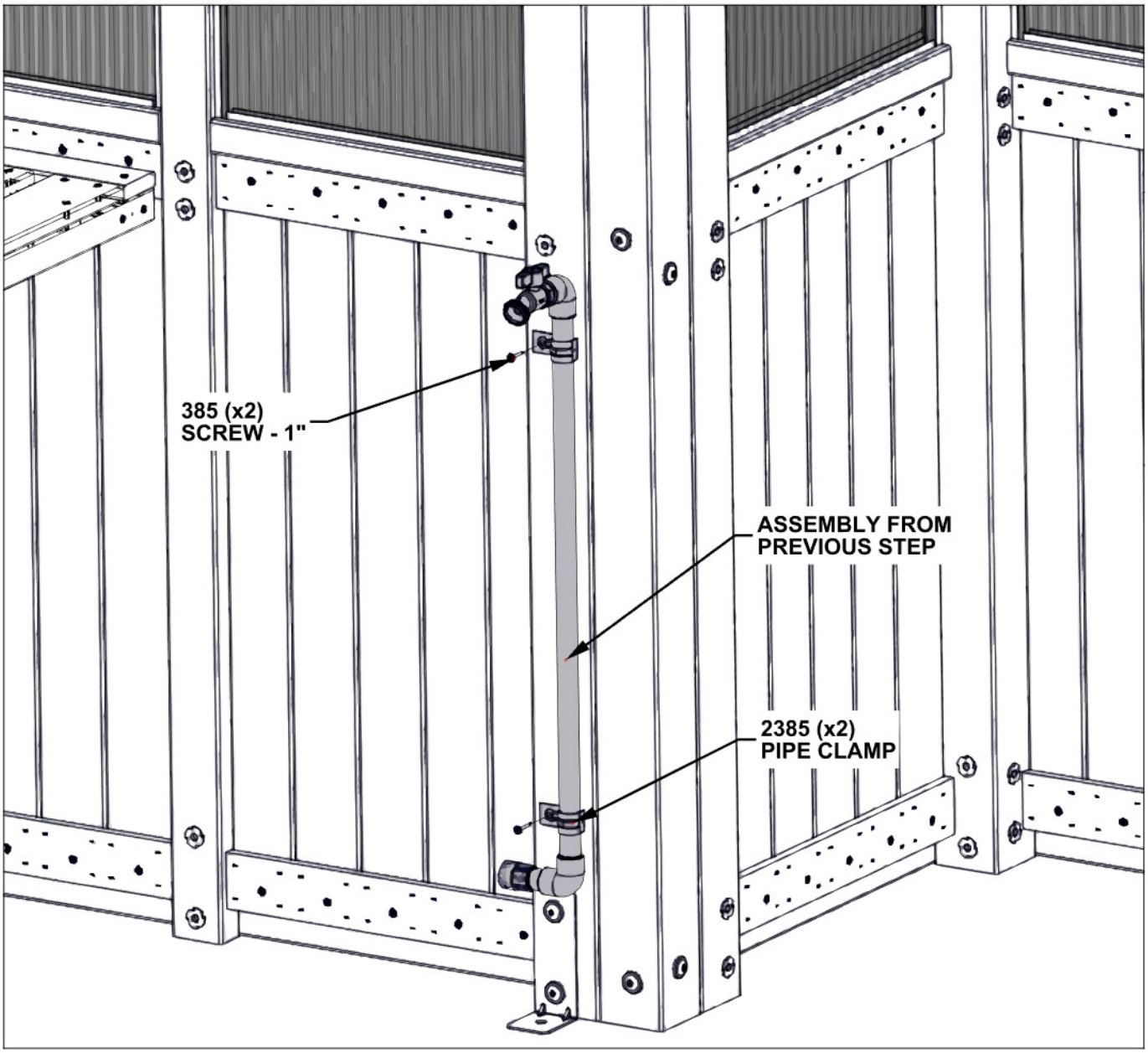

ONLY FRONT SIDE OF GREENHOUSE
SHOWN FOR DETAIL.

STEP 261C - WATER LINE ASSEMBLY

QTY	PART NUMBER	DESCRIPTION
2	H100536	SCREW PWH 8x1 1/4 BLK

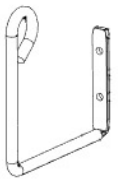

A4M03473 HOSE HANGER
(x1)

- ATTACH HOSE HANGER TO CLEAT APPROXIMATELY AS SHOWN BELOW.
- PRE-DRILL WITH AN 1/8" [3mm] DRILL BIT USING HOSE HANGER AS A GUIDE.

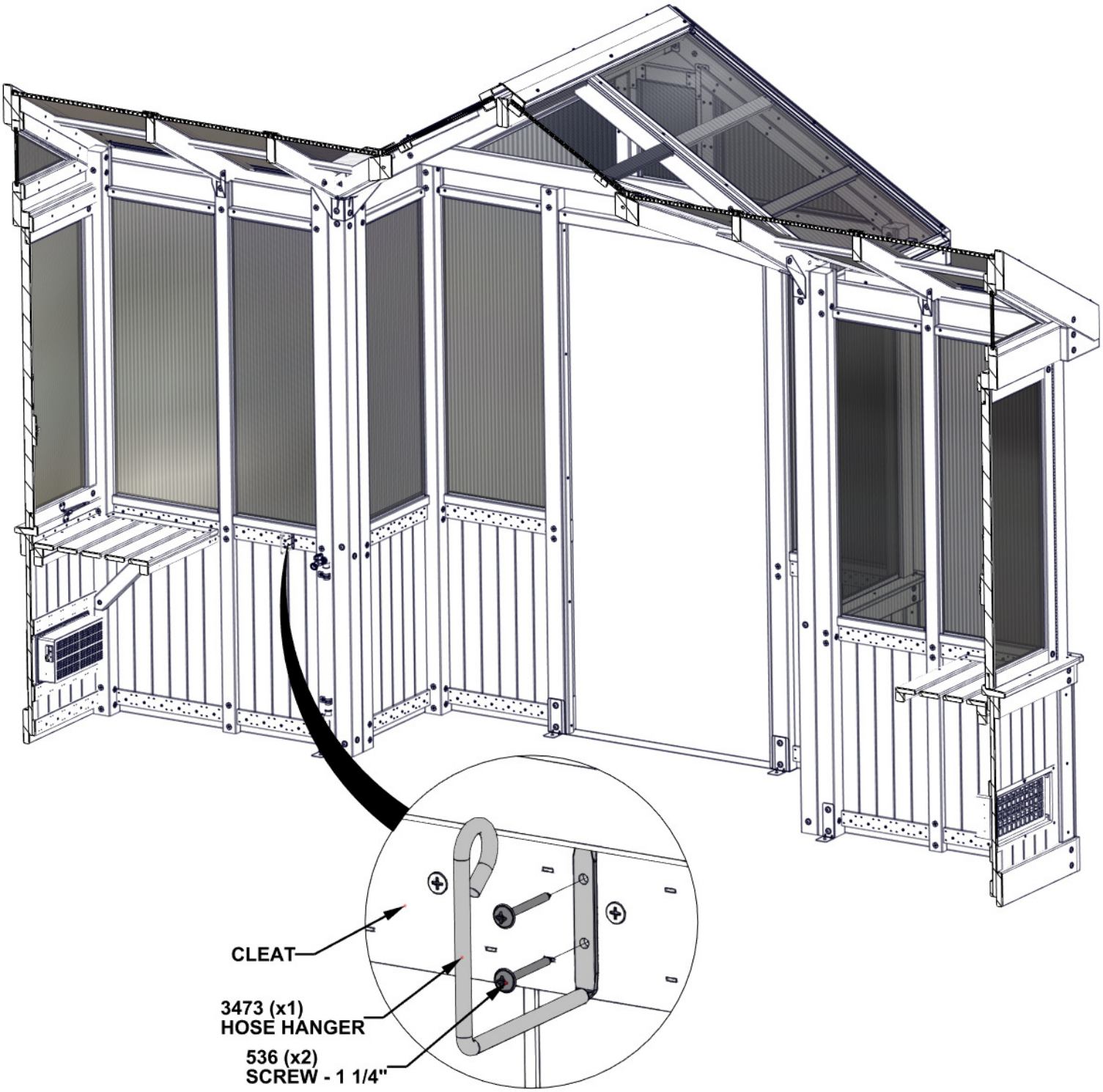

STEP 261D - WATER LINE ASSEMBLY

QTY	PART NUMBER	DESCRIPTION
3	H100385	SCREW PFH 8x1 BLK

A4M02385 PIPE CLAMP
(x3)

A6P01060 COLLAPSIBLE
(x2) GARDEN HOSE

- CONNECT ONE END OF A HOSE TO THE HOSE SPLITTER AND THE OTHER END TO THE FAUCET INLET.
- FASTEN THE HOSE TO THE WALL USING THE PIPE CLAMPS AS DESIRED.
- CONNECT THE END OF THE SECOND HOSE TO THE FAUCET OUTLET, THEN HANG THE HOSE UP ON THE HANGER.

FAUCET OUTLET

HOSE SPLITTER

1060 (x2) COLLAPSIBLE GARDEN HOSE

FAUCET INLET

STEP 262 - TABLE ASSEMBLY

QTY	PART NUMBER	DESCRIPTION
8	H100200	SCREW PFH 8x1 1/2 BLK

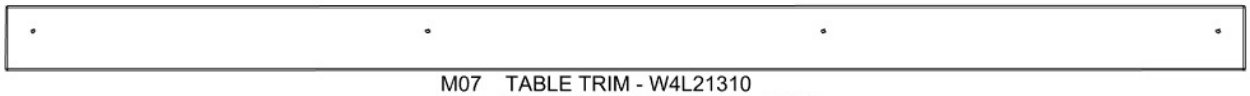

M07 TABLE TRIM - W4L21310
(x1) 5/8"x3 3/8"x68 3/4" (16x86x1746)

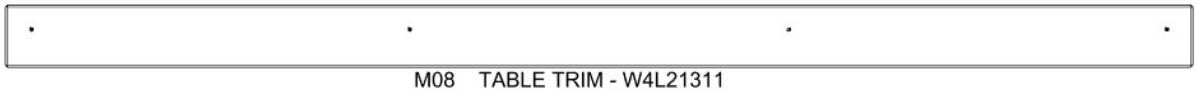

M08 TABLE TRIM - W4L21311
(x1) 5/8"x3 3/8"x64 1/2" (16x86x1639)

- ALIGN PILOT HOLES.

ONLY BACK OF GREENHOUSE SHOWN FOR DETAIL.

TOPS OF M07 & M08 ARE FLUSH WITH TABLE TOP.

M08 (x1) TABLE TRIM

M07 (x1) TABLE TRIM

200 (x8) SCREW - 1 1/2"

STEP 263 - TABLE ASSEMBLY

QTY	PART NUMBER	DESCRIPTION
8	H100200	SCREW PFH 8x1 1/2 BLK

M06 TABLE TRIM - W4L21303
(x2) 5/8"x3 3/8"x48 1/8" (16x86x1223)

- ALIGN PILOT HOLES.

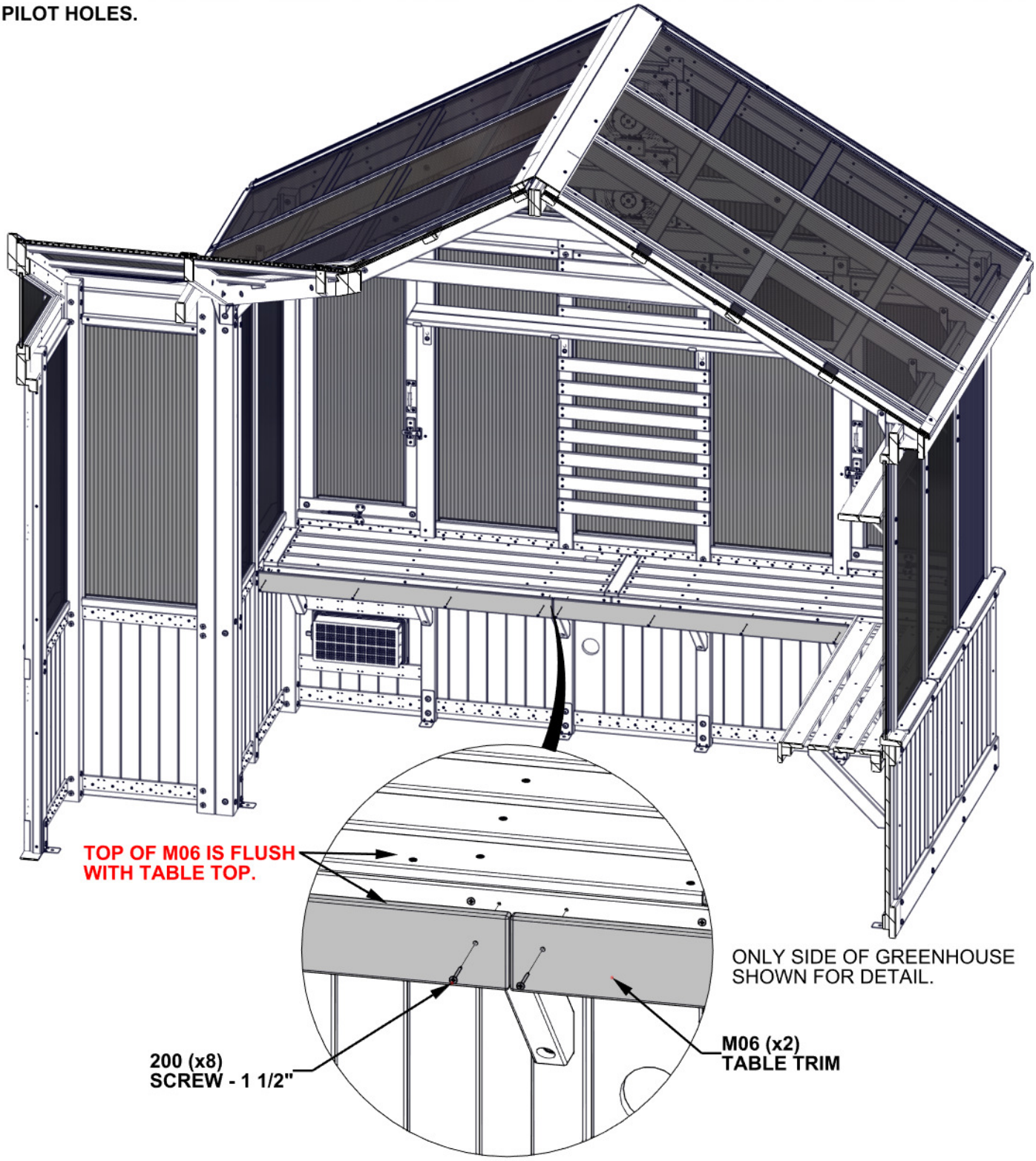

STEP 264 - TABLE ASSEMBLY

QTY	PART NUMBER	DESCRIPTION
8	H100200	SCREW PFH 8x1 1/2 BLK

M09 TABLE TRIM - W4L21313
(x2) 5/8"x3 3/8"x48" (16x86x1219)

- ALIGN PILOT HOLES.

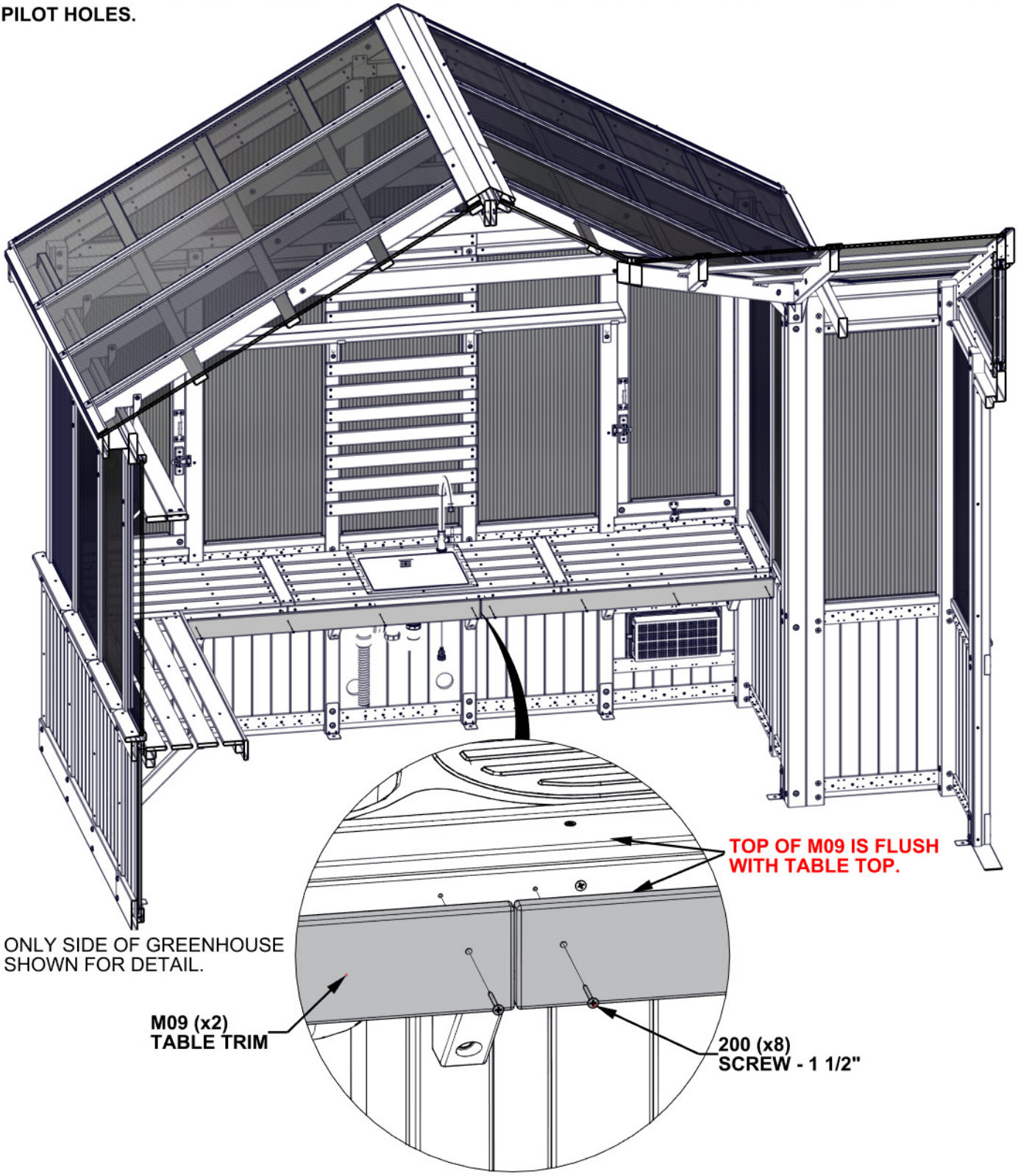

STEP 265 - ELECTRICAL ENCLOSURE MOUNTING

QTY	PART NUMBER	DESCRIPTION
2	H100200	SCREW PFH 8x1 1/2 BLK
2	H100411	SCREW PFH 8x5/8 BLK

A4M01292 MOUNTING BRACKET
(x2)

INCLUDED WITH THE ELECTRICAL ENCLOSURE

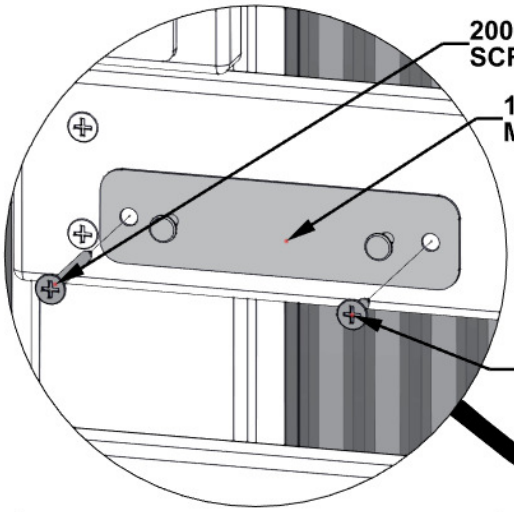

- DRILL PILOT HOLES USING AN 1/8" [3mm] DRILL BIT.
- USE MOUNTING BRACKETS AND DIMENSIONS AS A GUIDE.

LONGER SCREWS ATTACH TO UPRIGHT ON BOTH BRACKETS.

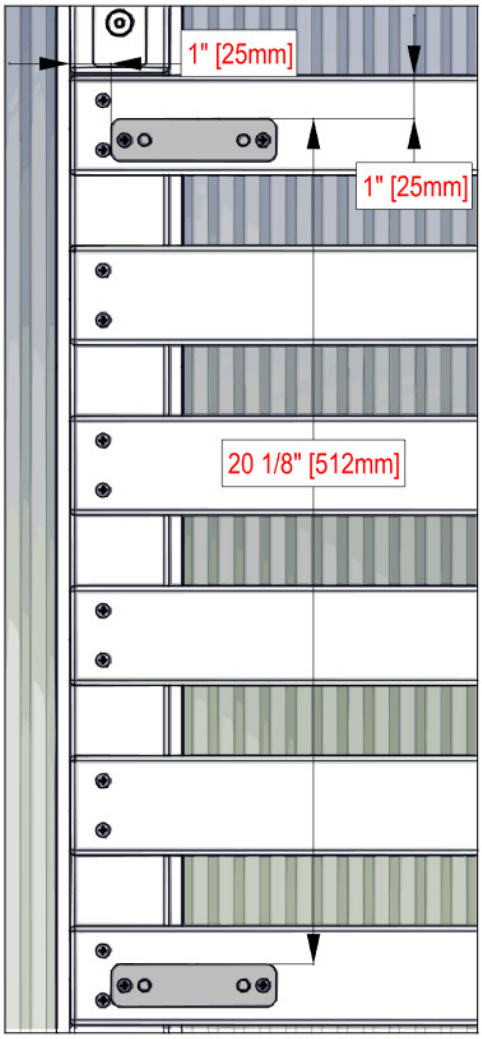

ATTACH BRACKETS USING DIMENSIONS GIVEN.

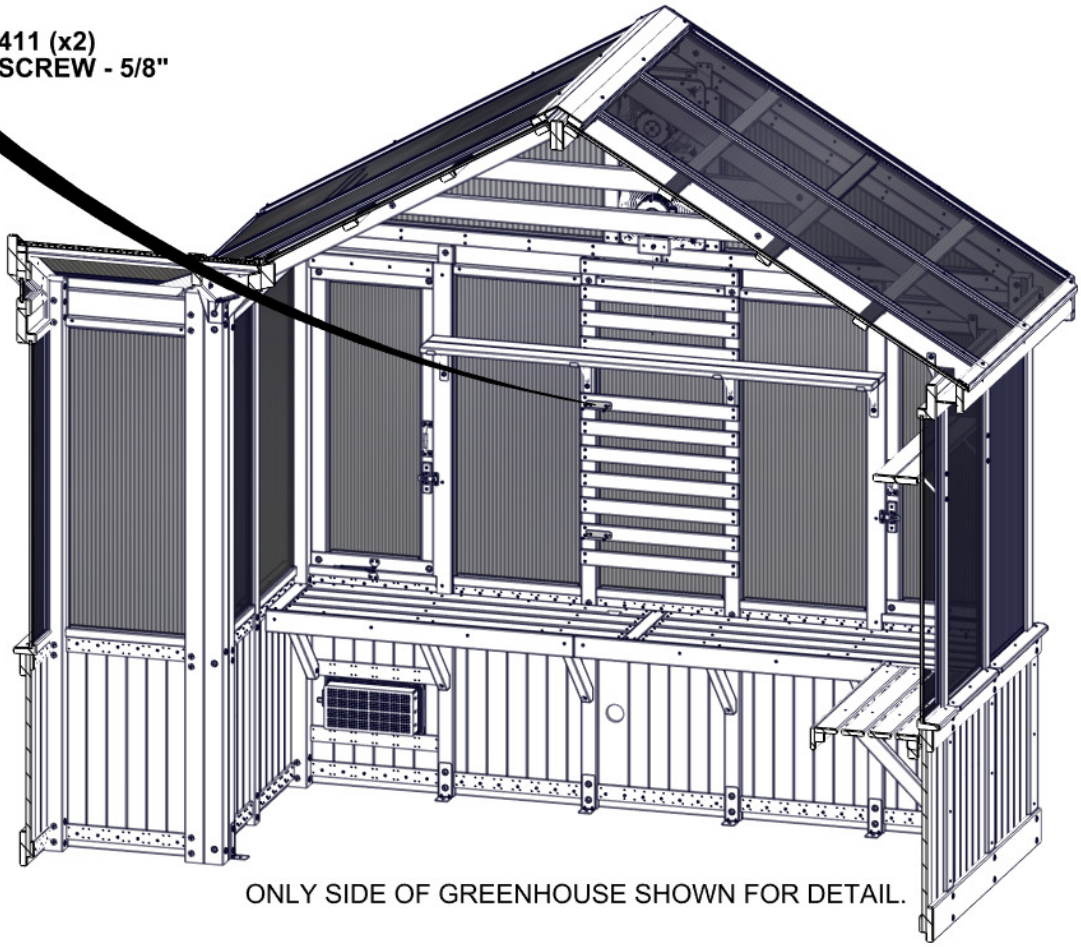

ONLY SIDE OF GREENHOUSE SHOWN FOR DETAIL.

STEP 266 - ELECTRICAL ENCLOSURE MOUNTING

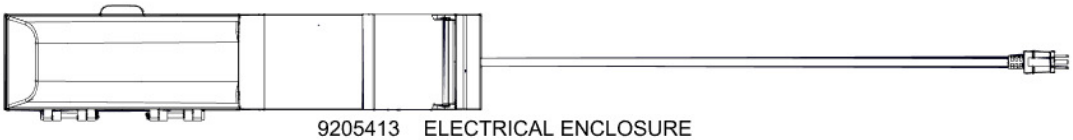

9205413 ELECTRICAL ENCLOSURE
(x1)

- HANG ELECTRICAL ENCLOSURE ON THE MOUNTING BRACKETS.
- RUN ELECTRICAL CORD THROUGH HOLE IN TABLE AS SHOWN.

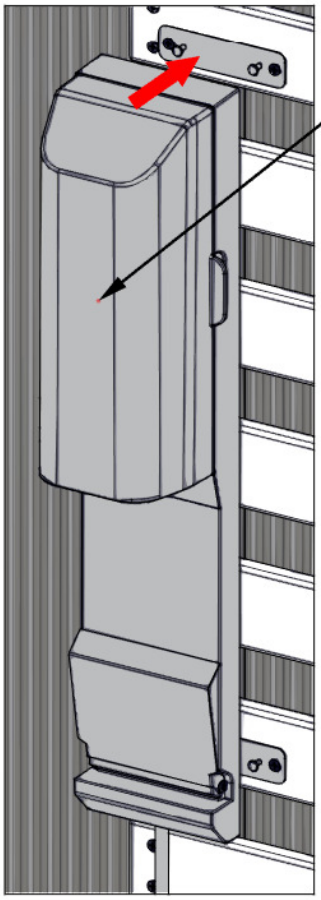

413 (x1)
ELECTRICAL ENCLOSURE

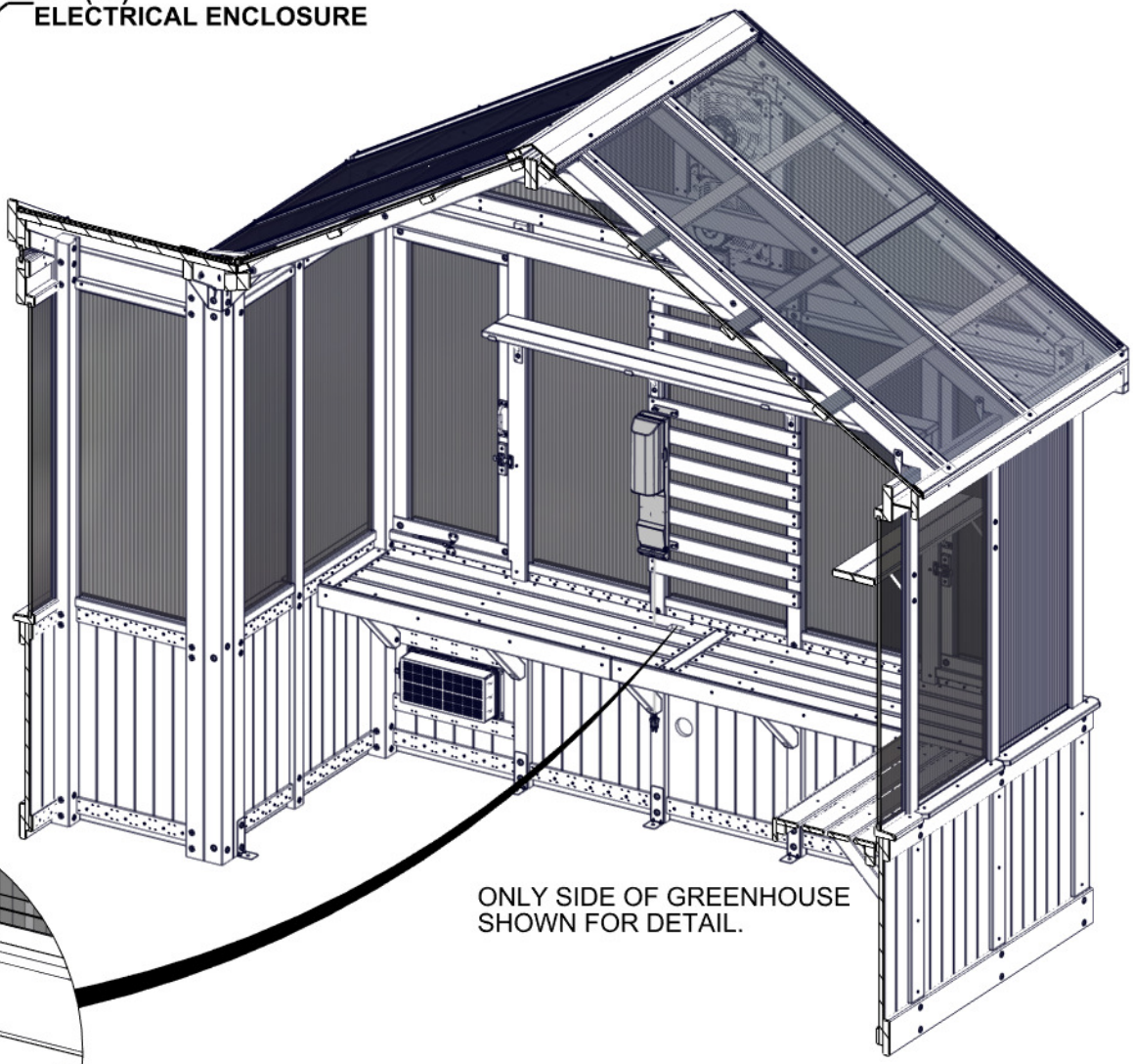

ONLY SIDE OF GREENHOUSE
SHOWN FOR DETAIL.

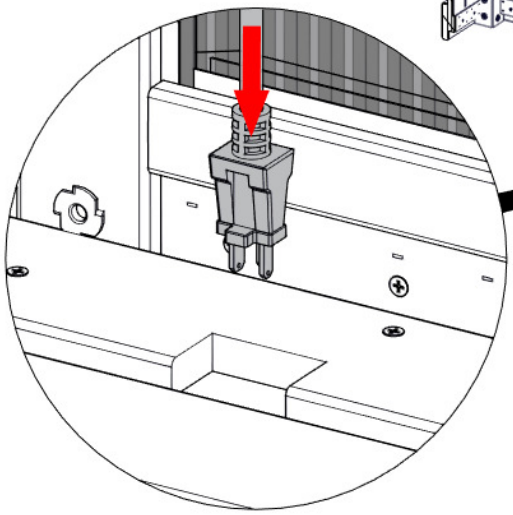

STEP 267 - THERMOSTAT MOUNTING

QTY	PART NUMBER	DESCRIPTION
4	H100411	SCREW PFH 8x5/8 BLK

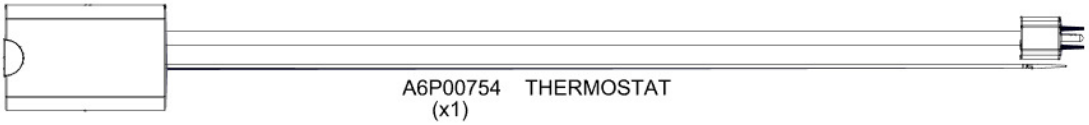

A6P00754 THERMOSTAT
(x1)

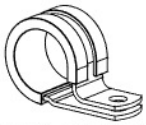

A4M05928 CABLE CLAMP
(x3)

- LOCATE THERMOSTAT IN A DESIRED LOCATION CLOSE TO THE ELECTRICAL ENSLOSURE.
- INSTALL SCREW LEAVING IT PARTIALLY STICKING OUT AND HANG THERMOSTAT.
- HANG THE PROBE IN AN ELEVATED LOCATION.
- SEE THERMOSTAT MANUAL FOR OPERATING INSTRUCTIONS.
- PLACE CABLE CLAMPS AS DESIRED FOR THE THERMOSTAT, ELECTRICAL ENCLOSURE, & EXHAUST FANS.

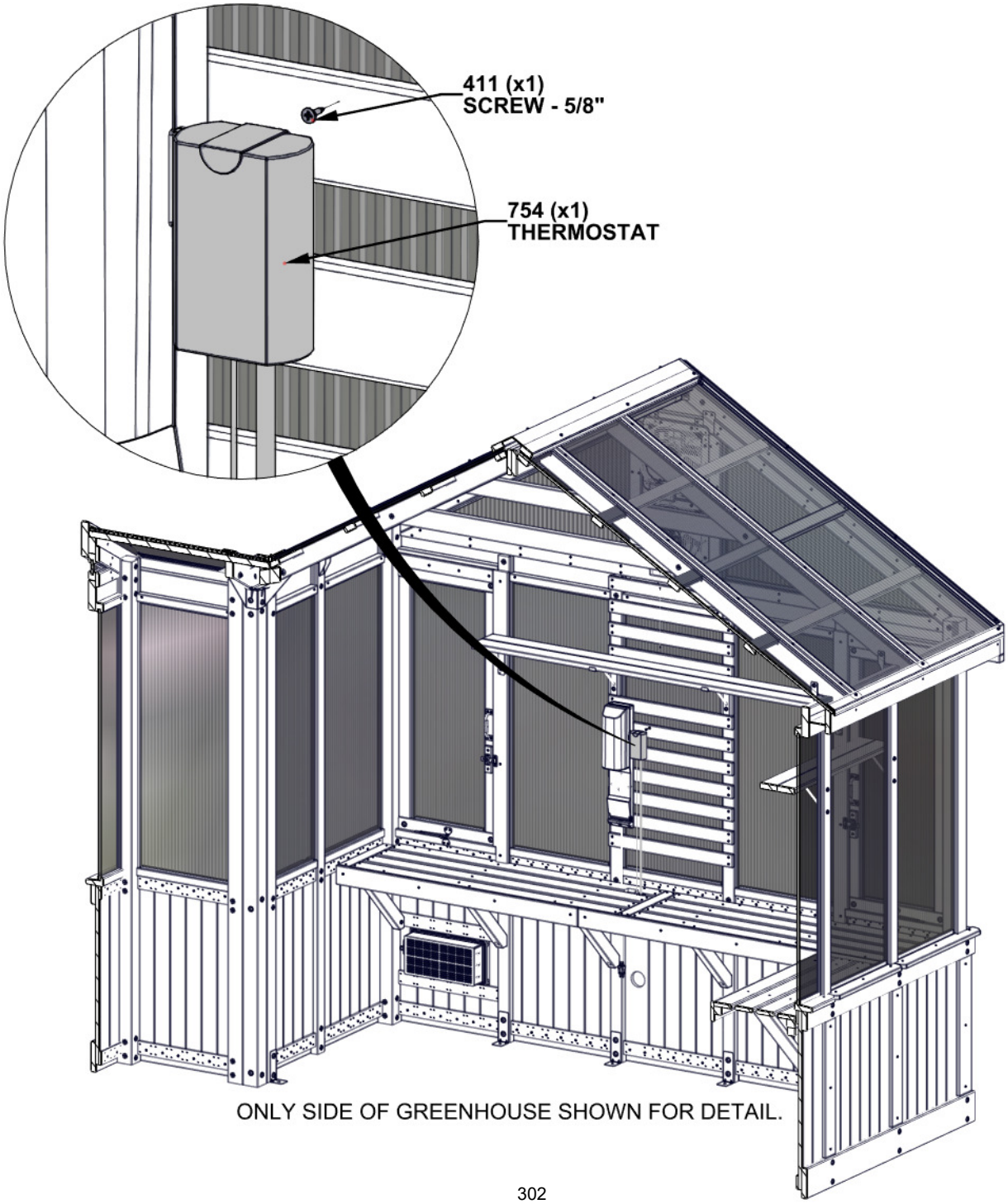

ONLY SIDE OF GREENHOUSE SHOWN FOR DETAIL.

STEP 268 - DOOR ASSEMBLY

QTY	PART NUMBER	DESCRIPTION
12	H100385	SCREW PFH 8x1 BLK

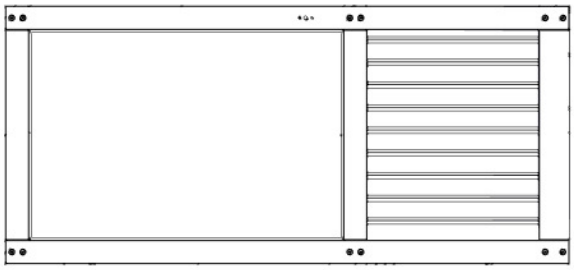

DA01 (x1) DOOR ASSEMBLY - W2A04009
1 7/8"x36 9/16"x80" (48x928x2032)

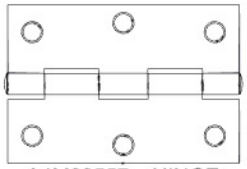

A4M00557 (x4) HINGE

ALIGN PILOT HOLES IN HINGES WITH PILOT HOLES ON DOOR.

DA01 (x1)
DOOR ASSEMBLY

BACK OF DOOR - SIDE WITH X BRACE

WITH THE DOOR LAYING WITH THE BACK FACING UP AS SHOWN, ATTACH HINGES. CORRECT ORIENTATION OF HINGES IS CRITICAL.

0557 (x4)
HINGE ASSEMBLY

NOTE DIRECTION OF BARREL ON HINGES.

385 (x12)
SCREW - 1"

STEP 269 - DOOR ASSEMBLY

QTY	PART NUMBER	DESCRIPTION
12	H100385	SCREW PFH 8x1 BLK

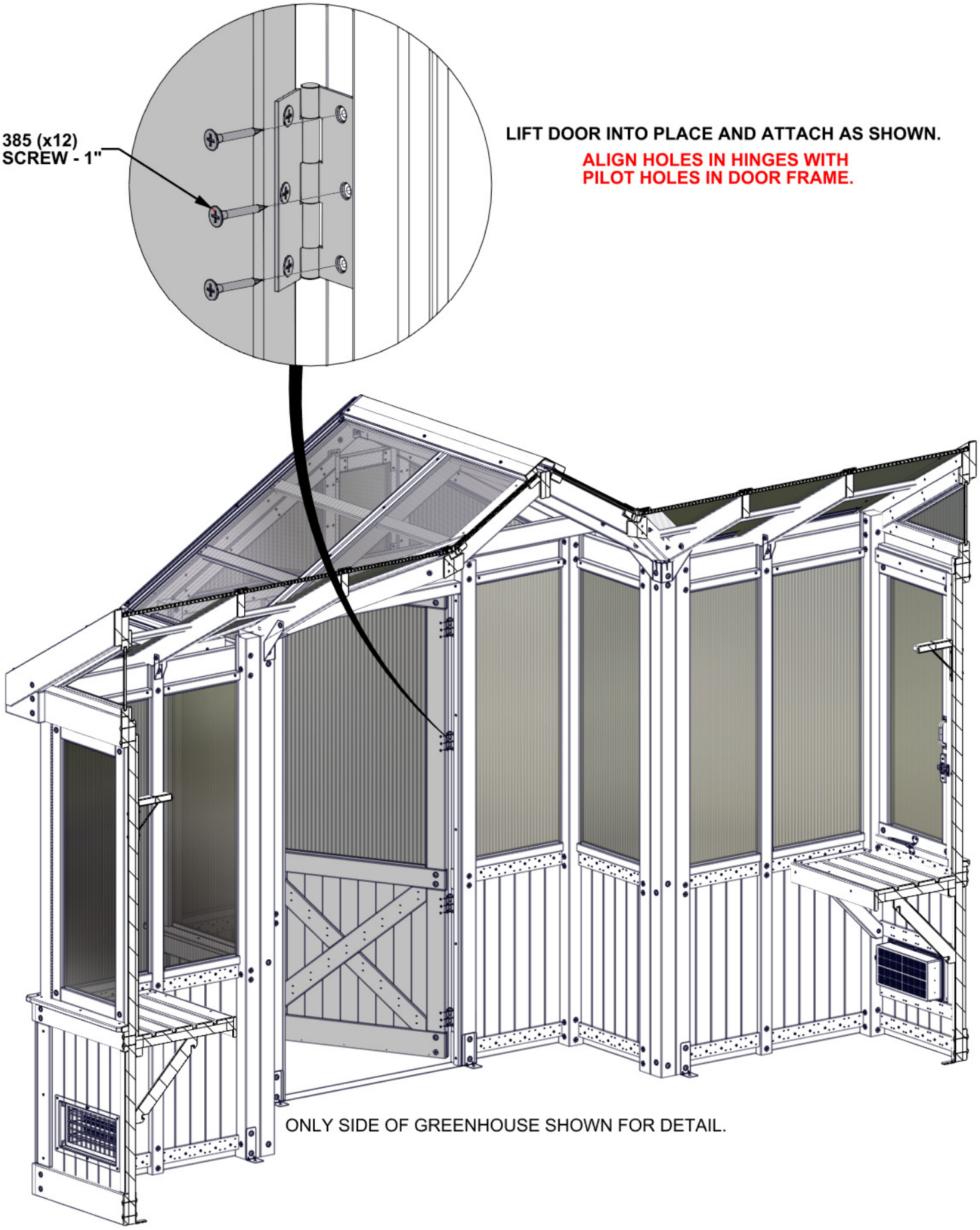

STEP 270 - DOOR ASSEMBLY

QTY	PART NUMBER	DESCRIPTION
2	H101259	SCREW POH 8x1 3/4 SS

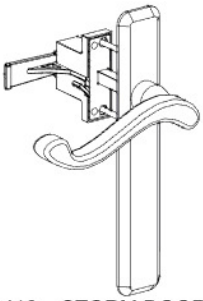

A4M02410 STORM DOOR HANDLE
(x1)

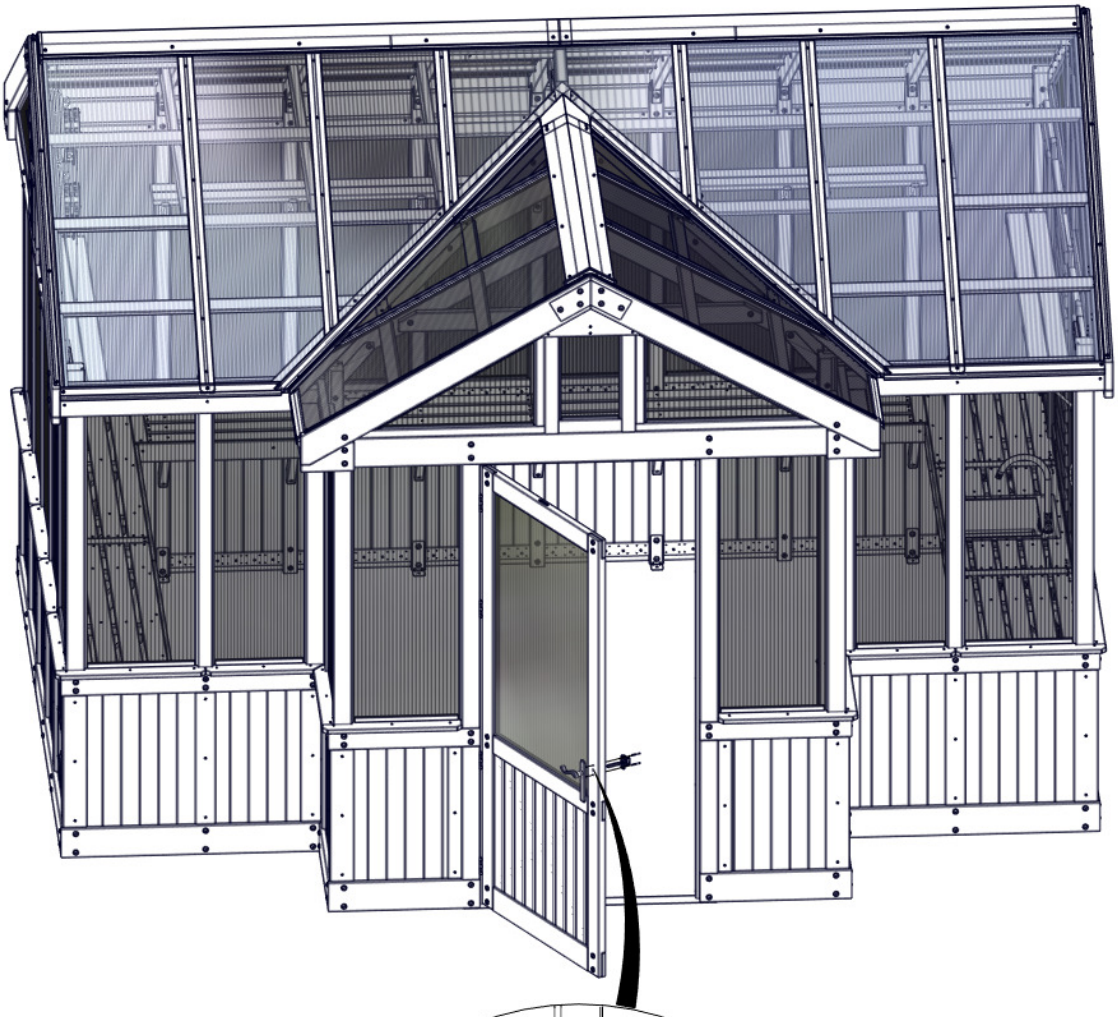

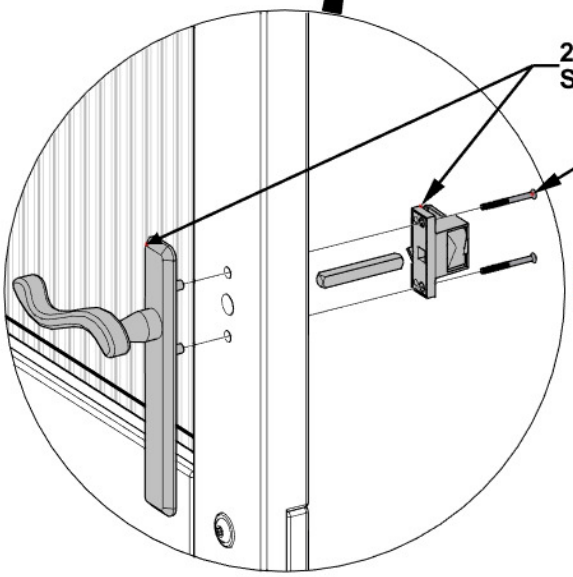

ENSURE CORRECT ORIENTATION OF DOOR HANDLE AS SHOWN.

USE SCREWDRIVER. DO NOT OVERTIGHTEN.

STEP 271 - DOOR ASSEMBLY

QTY	PART NUMBER	DESCRIPTION
2	H101260	SCREW PRH 8x1 1/4 BLK

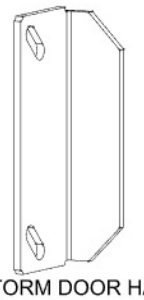

A4M02410 STORM DOOR HANDLE LATCH
(x1)

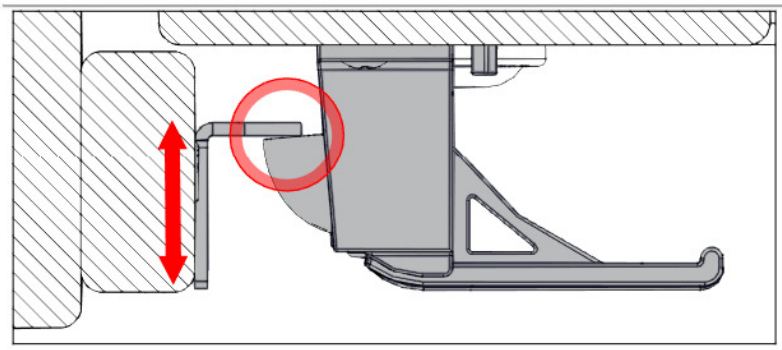

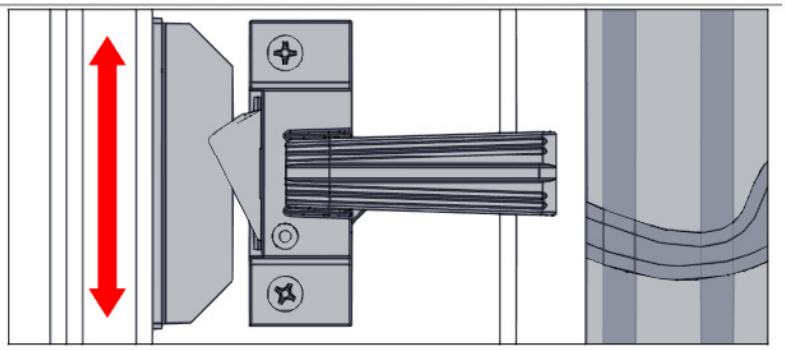

WITH THE DOOR SHUT, POSITION THE DOOR LATCH AS SHOWN. ADJUST FRONT TO BACK TO ENSURE THE LATCH MAKES CONTACT. ADJUST UP AND DOWN TO ENSURE THE LATCH IS CENTERED WITH THE HANDLE. MARK THE SLOTTED HOLE LOCATIONS AND PRE-DRILL WITH AN 1/8" [3mm] DRILL BIT.

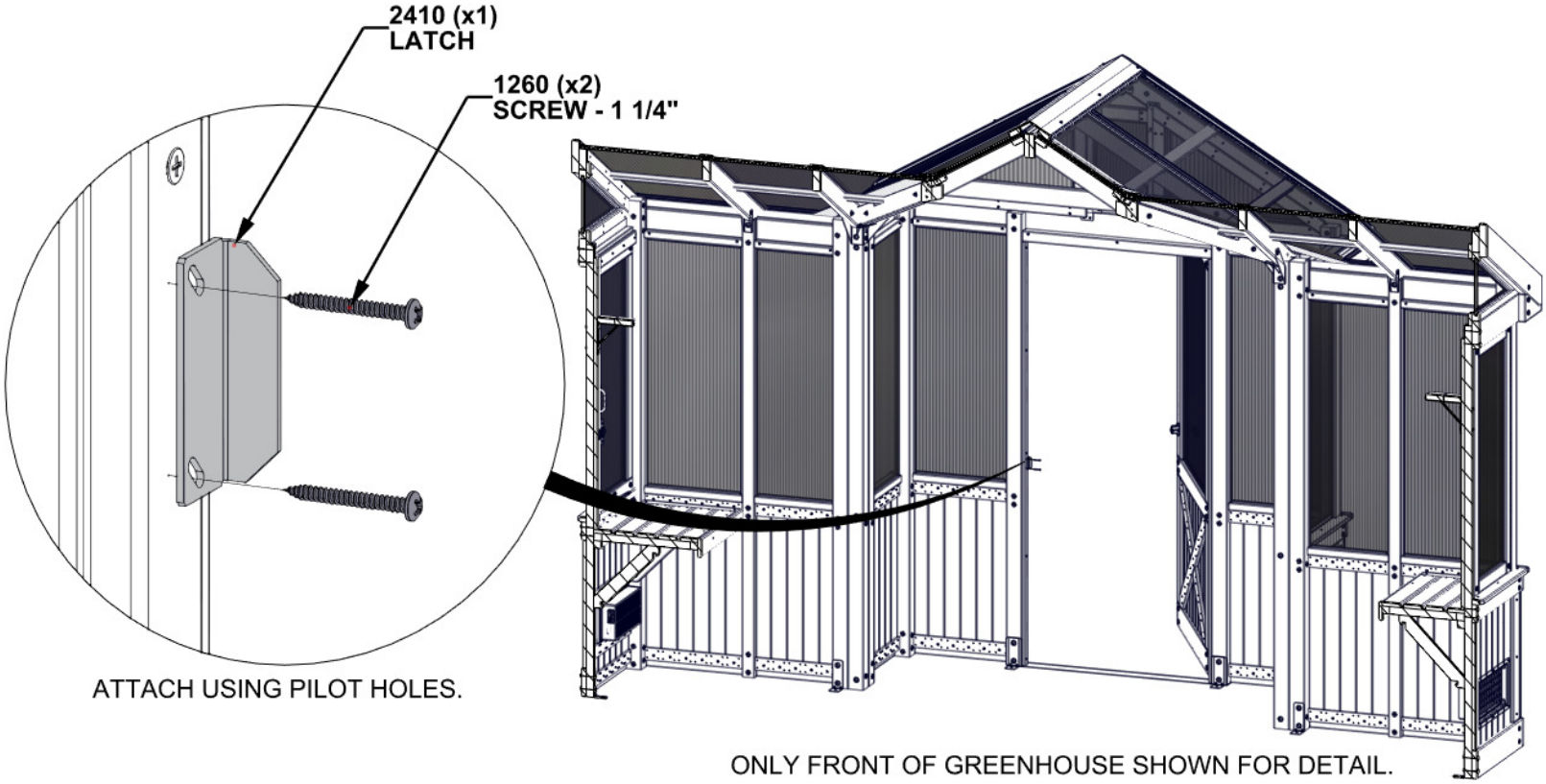

ATTACH USING PILOT HOLES.

ONLY FRONT OF GREENHOUSE SHOWN FOR DETAIL.

STEP 272 - DOOR ASSEMBLY

QTY	PART NUMBER	DESCRIPTION
5	H100202	SCREW PWH 8x5/8 BLK

A4M02532 DOOR SWEEP
(x1)

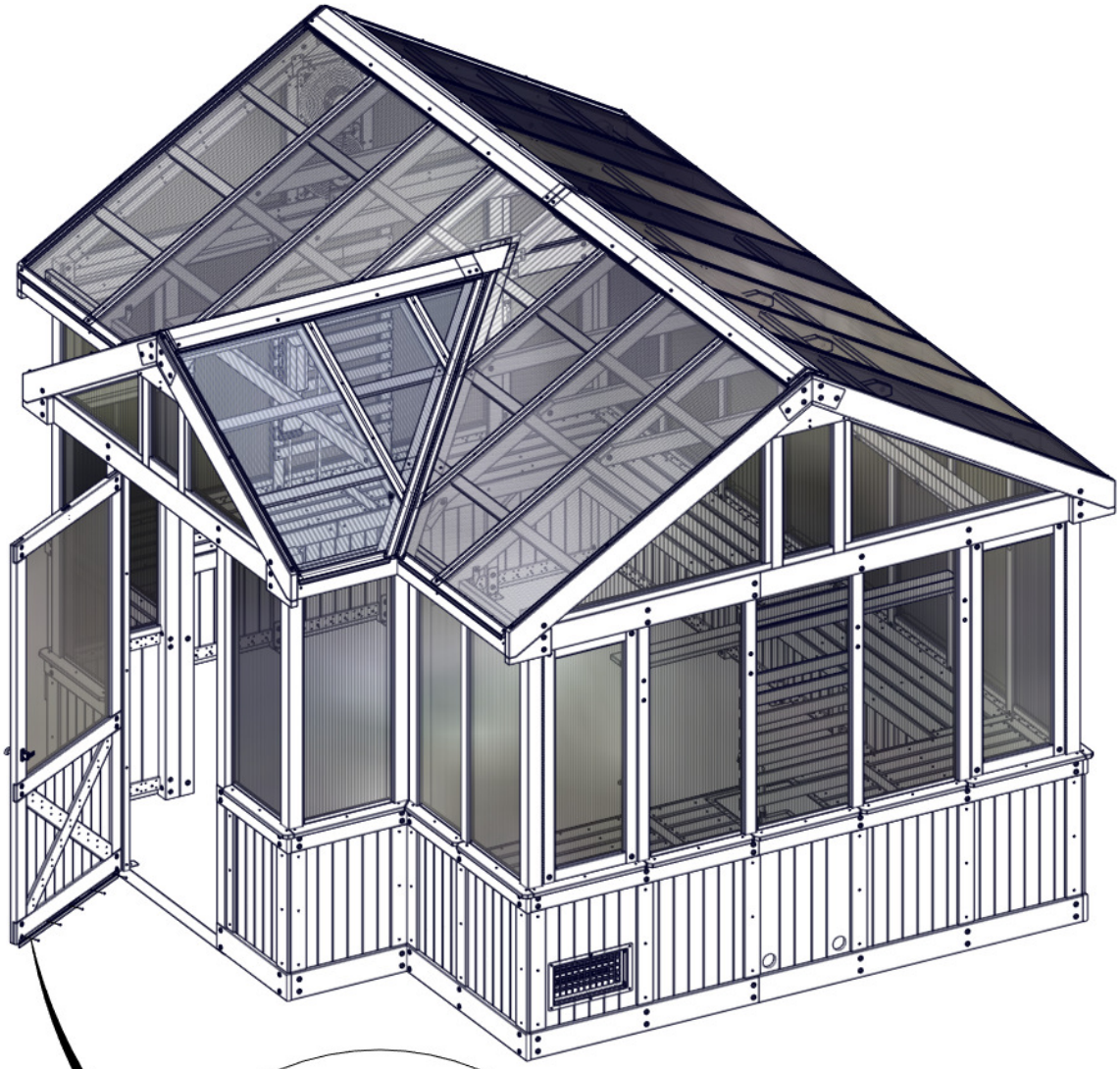

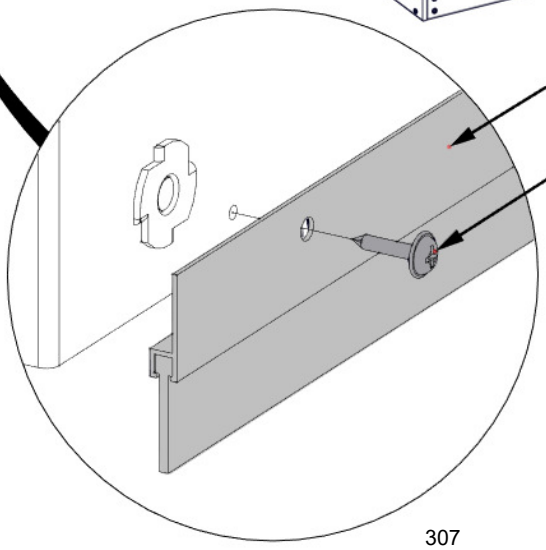

2532 (x1)
DOOR SWEEP

202 (x5)
SCREW - 5/8"

ATTACH DOOR SWEEP USING PILOT HOLES IN DOOR ASSEMBLY AS SHOWN.

STEP 273 - DOOR ASSEMBLY

QTY	PART NUMBER	DESCRIPTION
4	H100392	SCREW PWH 8x3/4 BLK

A4M02411 DOOR PROTECTOR CHAIN
(x1)

ATTACH DOOR CHAIN IN APPROXIMATE LOCATION AS SHOWN.

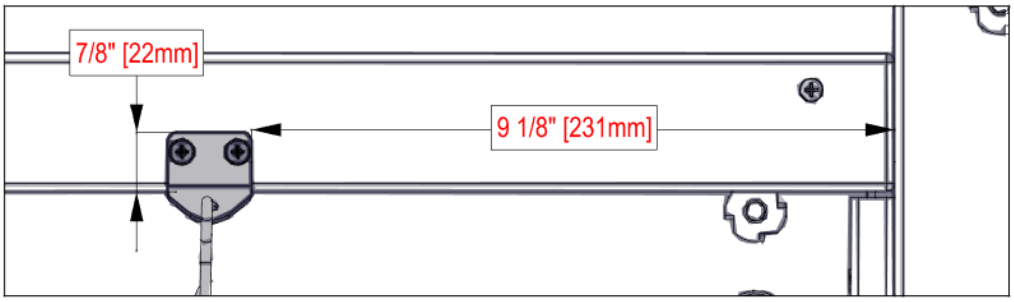

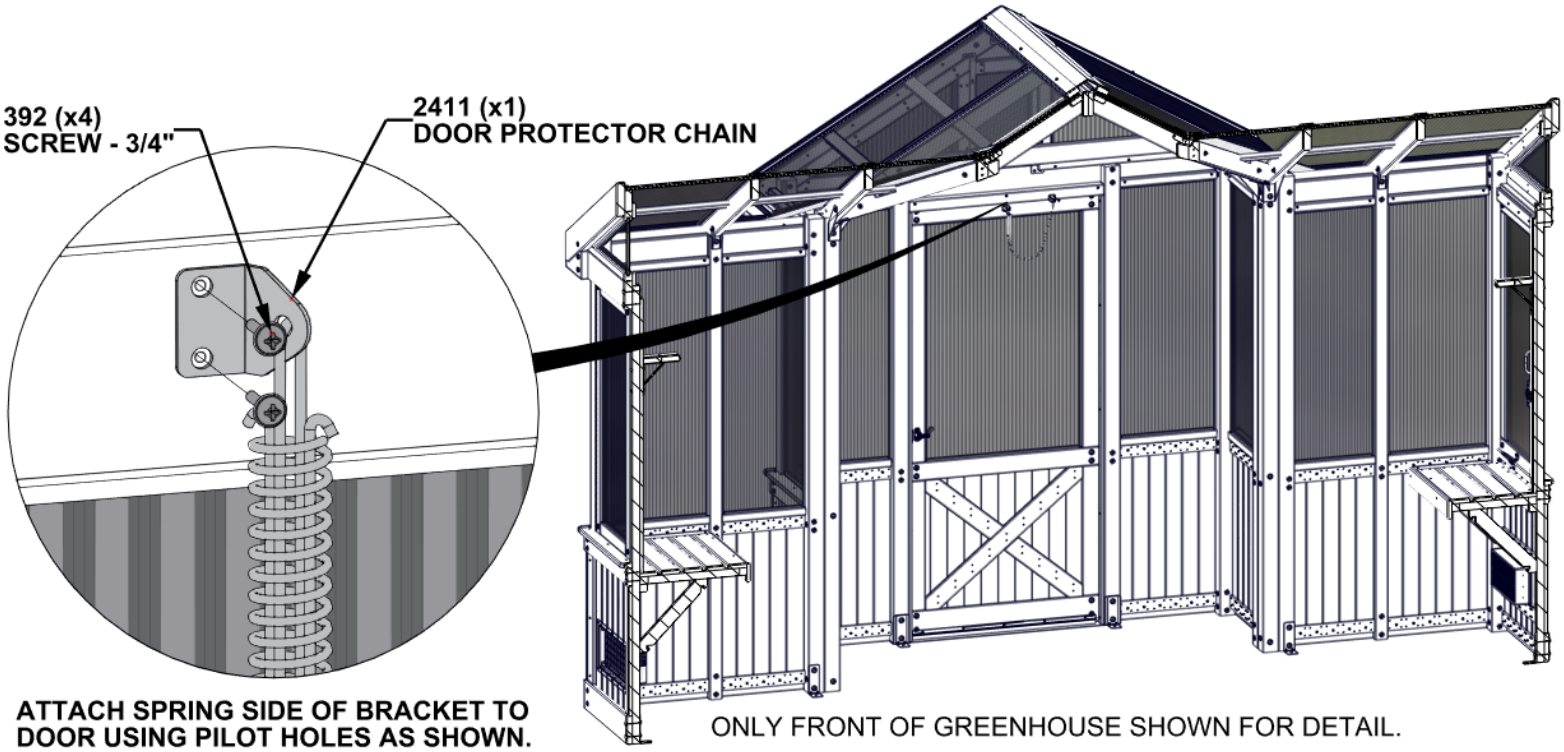

ATTACH SPRING SIDE OF BRACKET TO DOOR USING PILOT HOLES AS SHOWN.

ONLY FRONT OF GREENHOUSE SHOWN FOR DETAIL.

ONCE DOOR CHAIN IS ATTACHED, ADJUST CHAIN LENGTH AS DESIRED.

STEP 274 - CORD GROMMET INSTALLATION

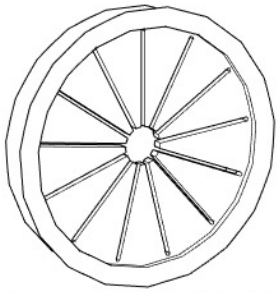

A6P00692 CORD GROMMET
(x3)

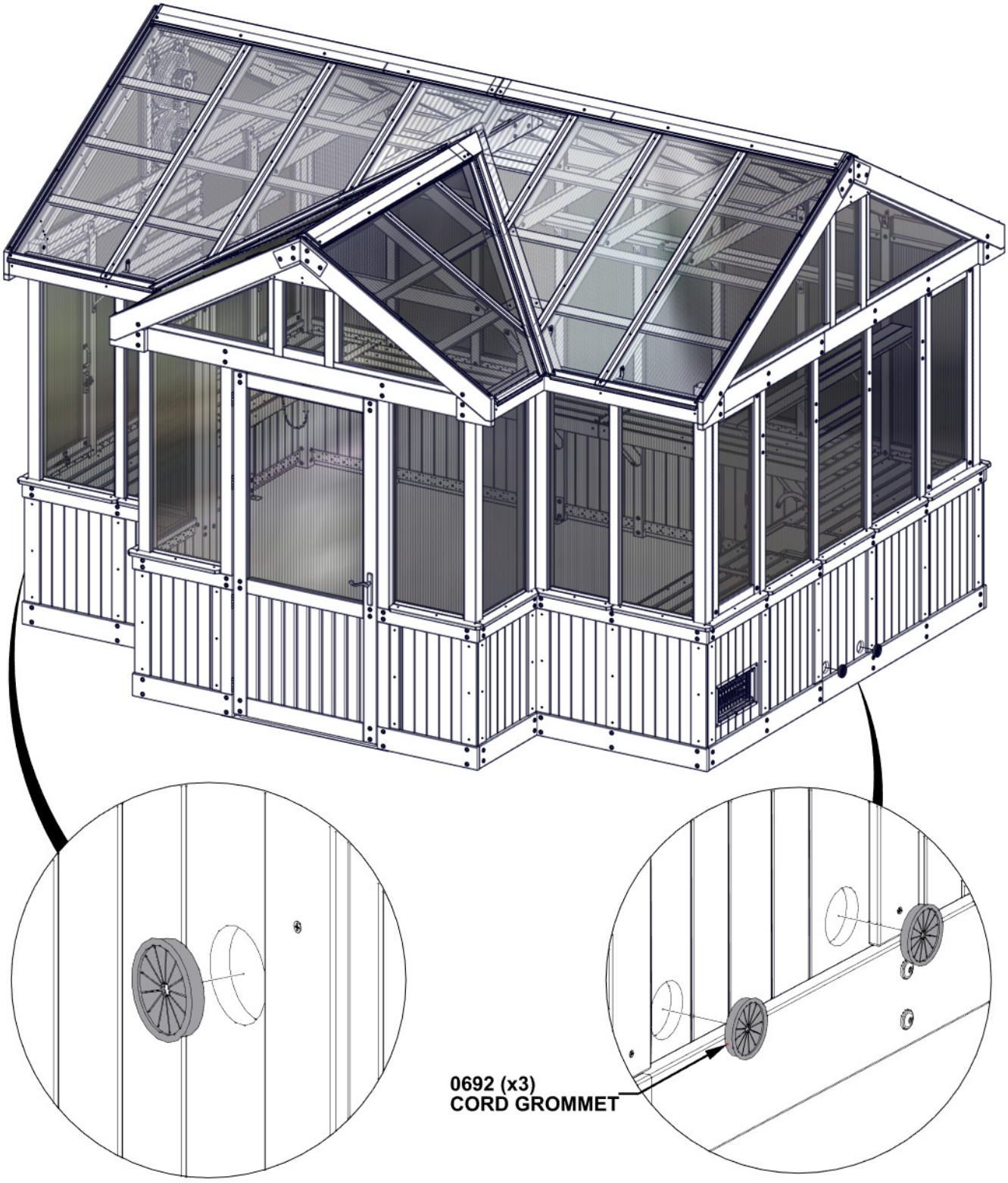

STEP 275 - HOOK INSTALLATION

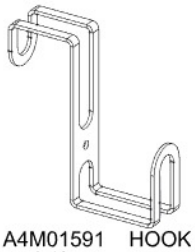

A4M01591 HOOK
(x8)

591 (x8)
HOOK

HANG PLANT HOOKS ON ACCESSORY TRUSSES WHERE DESIRED.

ONLY SIDE OF GREENHOUSE SHOWN FOR DETAIL.

STEP 276 - ANCHORING TO CONCRETE

QTY	PART NUMBER	DESCRIPTION
16	H101165	CONCRETE ANCHOR 3/8x3" BLK

IF GREENHOUSE IS NOT ON A CONCRETE SURFACE, SEE NEXT STEP FOR ANCHORING STRUCTURE.

IT IS RECOMMENDED TO ANCHOR YOUR GREENHOUSE INTO CONCRETE PAD OR POSTS.

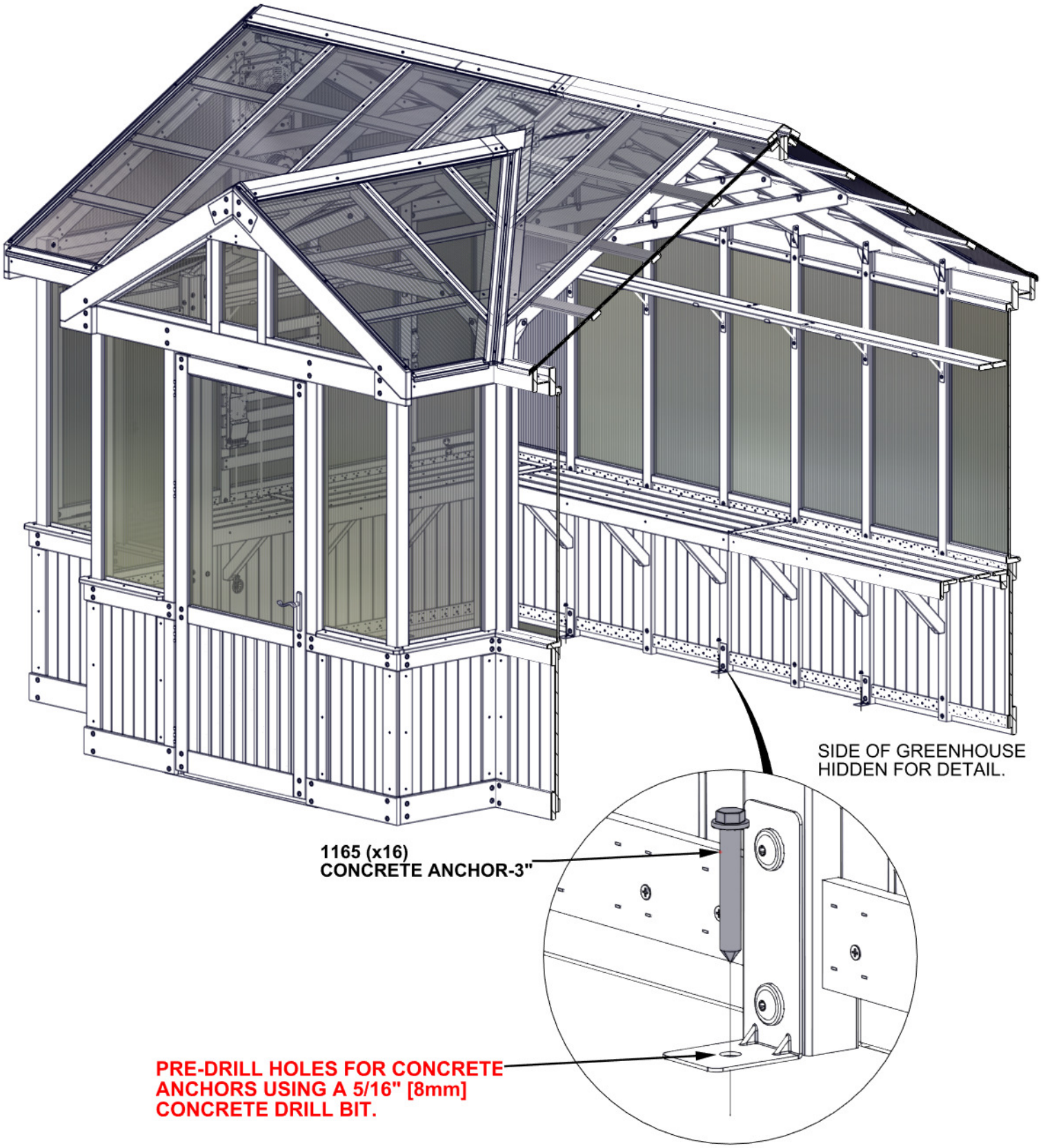

STEP 277 - ANCHORING TO GROUND

A4M05667 GROUND STAKE
(x16)

IF GREENHOUSE IS ON A CONCRETE SURFACE, SEE PREVIOUS STEP FOR ANCHORING STRUCTURE.

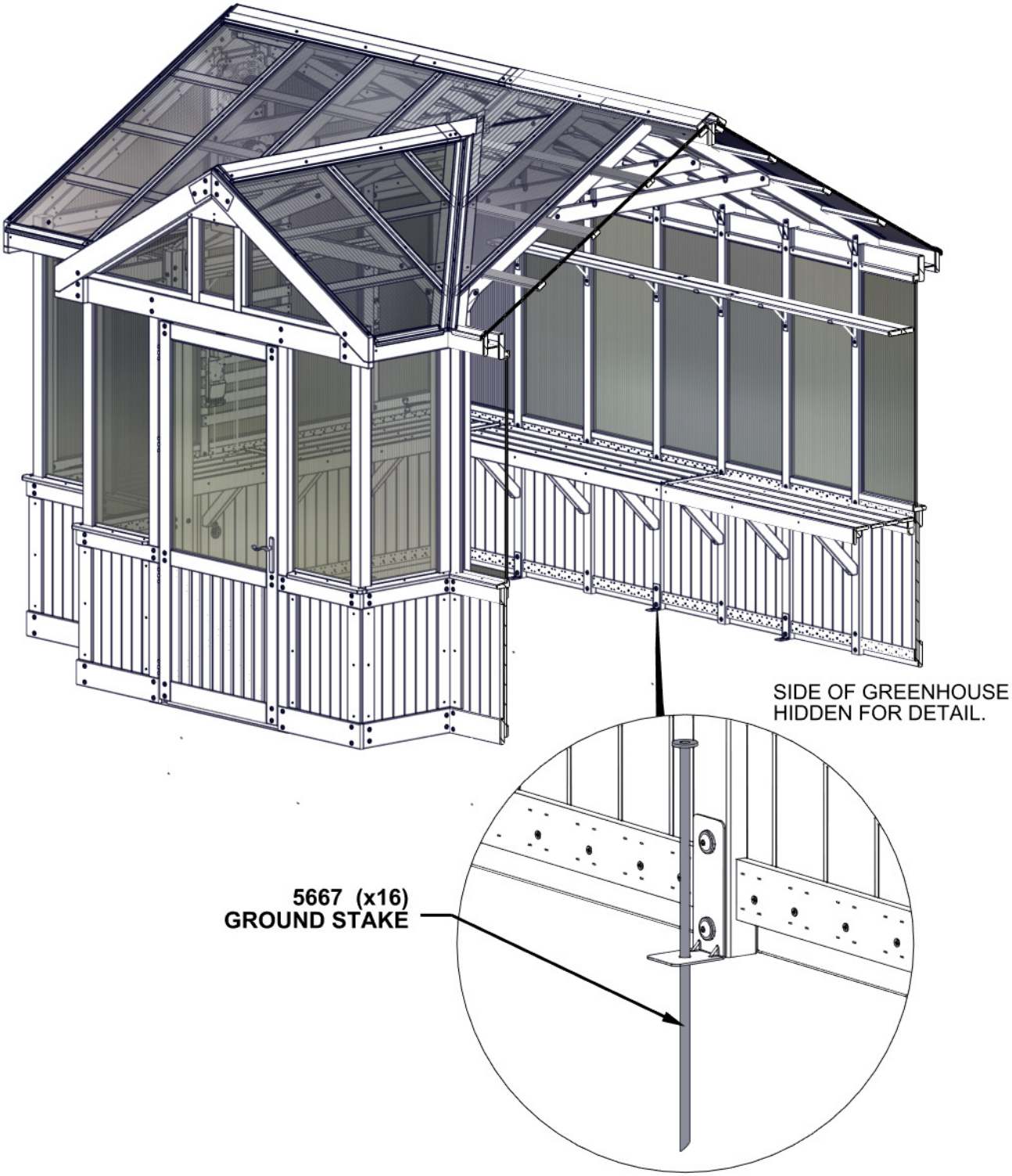

STEP 278 - DOOR ASSEMBLY

QTY	PART NUMBER	DESCRIPTION
4	H100202	SCREW PWH 8x5/8 BLK

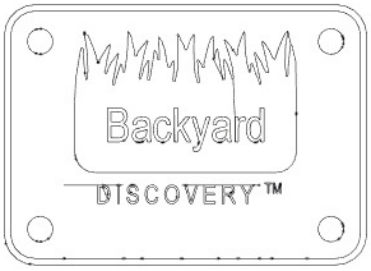

A4M02158 BYD ID TAG PATIO
(x1)

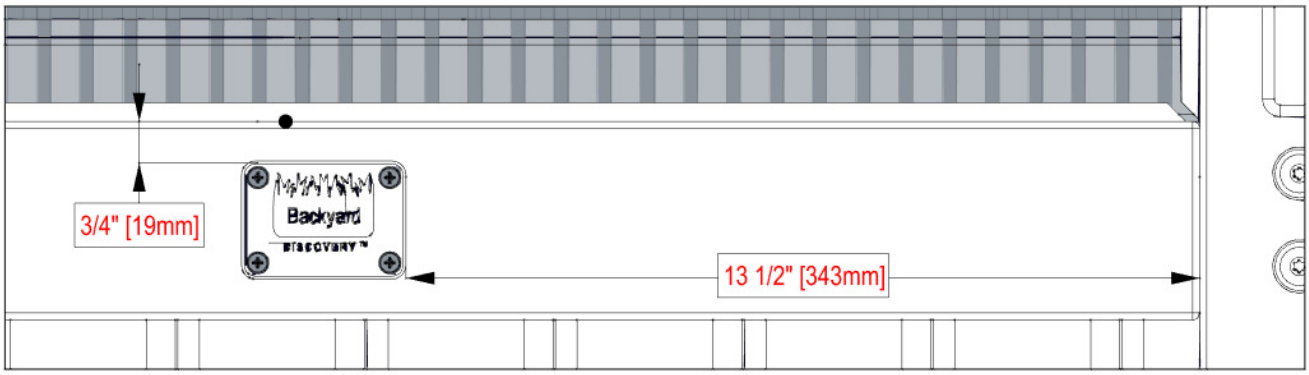
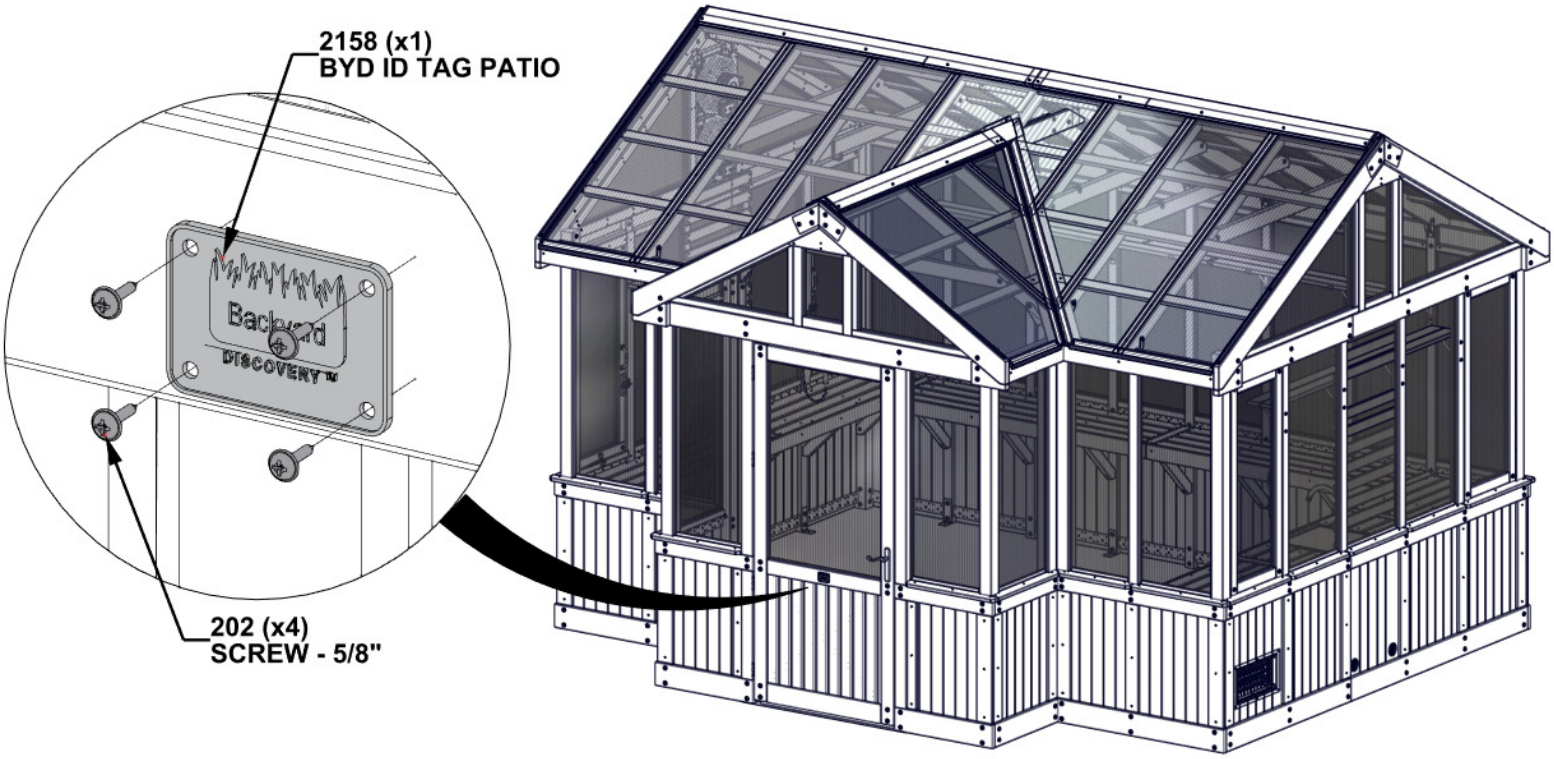
CENTER ID TAG ON BOARD WITH MEASUREMENTS GIVEN.