SAFETY PRECAUTIONS

- Place the dehumidifier on a flat surface to minimize vibration and noise.
- Before use, check the power cord for any damage. Do not operate the dehumidifier if the power cord or plug is damaged.
- Insert the three-prong plug into a matching electrically grounded outlet (120V/60Hz, at least 5A). Do not cut off the third prong or modify the power cord length.
- Avoid operating the dehumidifier in standing water and ensure the motor and wiring stay dry.
- Never immerse the dehumidifier in water or other liquids.
- Keep the dehumidifier away from heat-generating devices, flammable materials, orhazardous substances.
- Turn off and unplug the power supply before cleaning or storing the dehumidifier.
- Always grasp the plug (not the cord) to unplug.
- Do not insert fingers or other objects into the air inlet or outlet.
- Avoid sitting, standing, or placing heavy objects on the dehumidifiers.
- Disconnect the power if you notice strange sounds, odors, or smoke coming from the dehumidifier.
- Do not operate or turn off the dehumidifier by plugging in or unplugging it. Use the control panel instead.
- This dehumidifier should only be used by adults who have read the manual and understand its operation.
- This dehumidifier is not intended for use by individuals (including children) with reduced physical, sensory or mental capabilities, unless supervised or instructed by someone responsible for their safety.
- Children should be supervised to ensure that they do not play with the dehumidifier.
- Do not tilt the dehumidifier while it is operating to prevent water overflow.

PARTS IDENTIFICATION

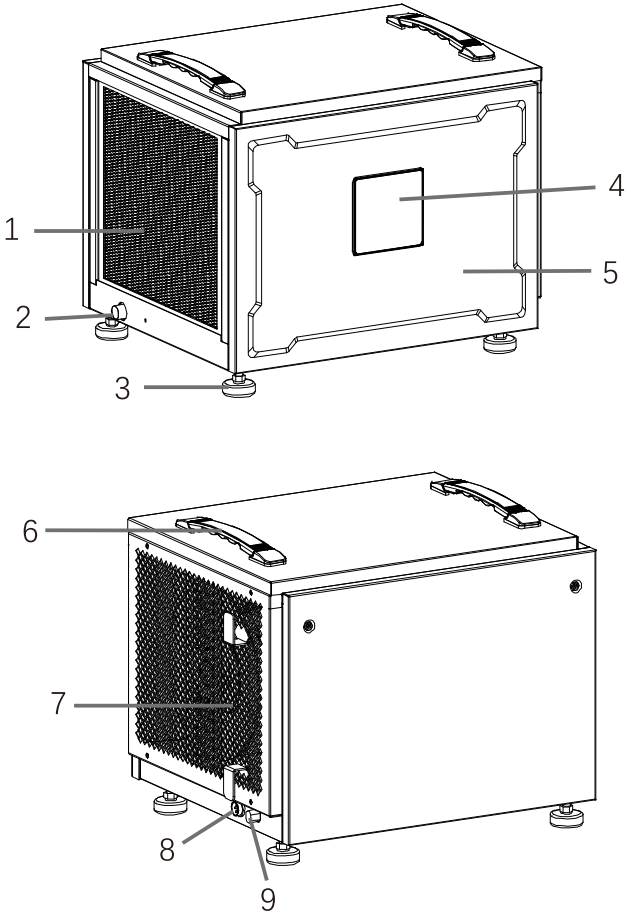

1. Air Inlet
2. Gravity Drain Outlet
3. Adjustable Foot
4. Control Panel
5. Service Panel
6. Handle
7. Air Outlet
8. Remote Control Port
9. Power Cord Port

NOTE: DO NOT OBSTRUCT THE AIR INLET OR OUTLET.

INSTALLATION INSTRUCTIONS

1. Recommended Installations

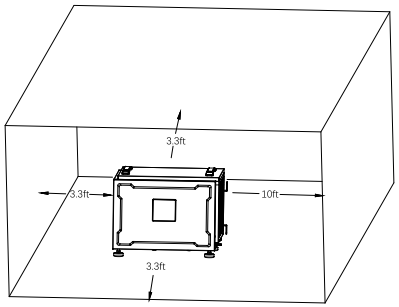

Adequate Clearance: Keep the air outlet at least 10 feet from obstacles and the air inlet at least 3.3 feet from obstacles.

Following the above recommendations will help prevent the discharged air from being drawn back into the unit, ensuring the dehumidifier operates effectively.

2. Position Your Dehumidifier

- Install the dehumidifier horizontally to minimize vibration and or noise.
- You can adjust the feet to level the dehumidifier.

To adjust the feet,

- Turn the nut in a clockwise direction to get the nut loosen;
- Turn the foot in a clockwise direction to get the foot down or turn the foot in a counterclockwise direction to get the foot up;
- Turn the nut in a counterclockwise direction to fix the foot.

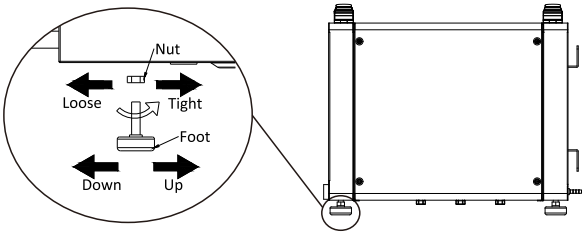

For optimal outcomes, please:

- Operate your dehumidifiers in an enclosed area.
- Close all doors and windows that open to the outside to maximize water removal efficiency.
- Place your dehumidifier away from obstructions, and keep it away from anything that could block airflow into and out of the unit.

3. Set up the Drainage System

Drain by Gravity

If the drainage point is below the gravity drain outlet and located nearby, with no upward lift required, you may use gravity drainage.

When using gravity to drain:

• Attach the gravity drain hose to the Gravity Drain Outlet.

• Direct the hose to a suitable drainage facility, ensuring it is positioned lower than the dehumidifier's drain outlet and free from kinks or blockages.

OPERATION INSTRUCTIONS

1. Plug in the Electrical Cord

IMPORTANT

Please let the dehumidifier sit outside the box for **24 hours** before initial plugging in.

To properly operate the dehumidifier, please plug it into a GFCI-protected 120-volt outlet with a rating of at least 5 amps. Uncoil the power cord and securely connect it to an appropriate outlet.

Note: When the dehumidifier is first plugged into AC power, the control panel display will light up for a second, which is part of the dehumidifier's self-diagnosis procedure and no action is required. This indicates that the dehumidifier is functioning correctly and ready to operate effectively. You will still need to press the POWER button to turn the dehumidifier on.

2. Control Panel Instruction

The control panel of the dehumidifier features a user-friendly interface with 4 buttons and an LED screen. Press the POWER Button to turn the dehumidifier on. After turning on the dehumidifier, the LED screen will display the readouts.

If not been operated for over 30 seconds, the control panel will become dim until pressed buttons again.

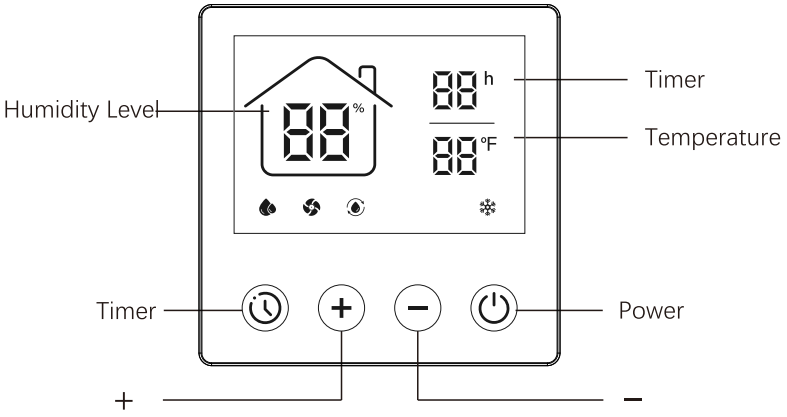

2.1. The Control Buttons

- **Power Button:** Press to toggle the dehumidifier on/off.
- **+ Button:** Press to increase humidity or timer settings.
- **− Button:** Press to decrease humidity or timer settings.
- **Timer Button:** Press to set a timer.

2.2. The LED Display

88% is humidity percentage value. If no operations on the control panel, this number is the humidity readout of the inlet air the dehumidifier detects which is similar to the current room humidity level. When you are pressing the + or − button to set the target humidity percentage value, this digital number will turn to display the previous setting value and keep blinking.

88h illuminates when the timer function is enabled and disappears when the timer function is disabled.

88°F is the temperature readout of the inlet air the dehumidifier detects which is similar to the current room temperature.

Water Droplet Icon: It illuminates when the compressor is running and disappears when the compressor stops running.

Note: In the following cases, it is normal if the water droplet icon disappears which means the compressor stops or does not kick in.

A. The humidity set-point is NOT at least 3% lower than the room humidity readout value (in this case, please double-check your setting);
B. The room humidity level has reached the set-point, so the dehumidifier automatically stops running;
C. The dehumidifier was just turned on and may take a few seconds for the compressor to kick in;
D. The dehumidifier was restarted in a brief moment, the compressor is under delay protection status.

Fan Icon: It illuminates when the fan is running and disappears when the compressor stops running.

Continuous Mode Icon: This icon illuminates when the humidity set point is 10%, which means the dehumidifier will dehumidify continuously.

Defrost Icon: It illuminates when the dehumidifier detects frost on the interior. During defrosting, the fan operates while the compressor does not, and the defrost icon flashes until the frost melts. The dehumidifier will automatically begin to dehumidify and the “Defrost” icon will disappear once the defrosting process is complete.

Note: Frequent defrosting may occur when the room temperature is too low, which can reduce dehumidification efficiency. For optimal performance, keep the room temperature above 65°F. If the temperature is below 60°F, consider adding heat to maintain proper drying.

3. Operate the Dehumidifier

3.1 Turn on the dehumidifier

Press the **Power** button to turn the dehumidifier on.

3.2 Check Room Humidity

Refer to the 88% on the control panel to check the current room humidity percentage.

3.3 Set Desired Humidity

Press the + or − button to set your desired humidity between 10% and 90%, in 1% increments. Recommended settings typically range between 40% and 60%. The 88% digital number will turn to display the previous target humidity set point and blink to indicate the setting is being adjusted.

Ensure the set humidity is at least 3% lower than the room humidity, After selecting your target value, wait for automatic registration after 5 seconds.

Once a target humidity is set, the dehumidifier will automatically cycle on and off to maintain humidity within +3% of the set level:

- The unit will run until the humidity drops to 3% below the target, then enter standby mode-the compressor and fan will stop running.
- When the humidity rises to 3% above the target, the dehumidifier will automatically restart and run until it again reaches 3% below the set level.

Note 1: The target humidity needs to be at least 3% lower than the current room humidity. If not, the unit will remain in standby mode until the room humidity rises 3% above the target.

Note 2: To run the unit continuously, set the target humidity to 10% to activate Continuous Mode.

3.4 Set Auto On/off Timer

The TIMER function allows scheduling the dehumidifier to turn on (AUTO-ON) or off (AUTO-OFF) after a delay of 1 to 24 hours.

- **To set AUTO-ON timer:** When the dehumidifier is off, selecting Timer activates it after the set hours.
- **To set AUTO-OFF timer:** When the dehumidifier is on, selecting Timer turns it off after the set hours.

Follow these steps to set the TIMER:

- Press the Timer Button, the Timer icon illuminates and the timer digital number changes into 00 H, flashing.

• Adjust the timer setting by pressing the + or − button for 1-hour increments, up to 24 hours.
• After selecting the target timer value, wait for automatic confirmation after 5 seconds.
• The timer countdown displays remaining time until the dehumidifier starts or stops.
• To disable the timer function, manually turn ON/OFF the dehumidifier, or set the timer to 00.

NOTE:
• Ensure power is supplied to the dehumidifier before setting AUTO ON TIMER.
• For AUTO ON setting, turn on the dehumidifier to select a desired humidity level first; otherwise, it maintains the previous setting.
• You can only set AUTO ON timer when the dehumidifier is off or set AUTO OFF timer when it's on, but not be able to set both AUTO ON and AUTO OFF timer simultaneously.
• TIMER functions only once, not cycling the dehumidifier indefinitely.
• TIMER is disabled if the dehumidifier is manually powered on/off.

3.5 Turn the Dehumidifier off

Press the **Power** button to turn off the dehumidifier.

Note: To protect the compressor, the fan runs for 5 seconds after the dehumidifier shuts off. So please do not disconnect the power cord to force the dehumidifier to stop. Always use the **Power** button.

4. Remote Controller Installation Instructions

This dehumidifier allows the onboard control panel to be used as a remote controller using a 33ft (10m) signal cable **(needs to be purchased separately)**. This enables the unit to be placed, for example, in a basement while the control panel is installed upstairs.

⚠ **Safety First:** Always disconnect the unit from power before performing any steps.

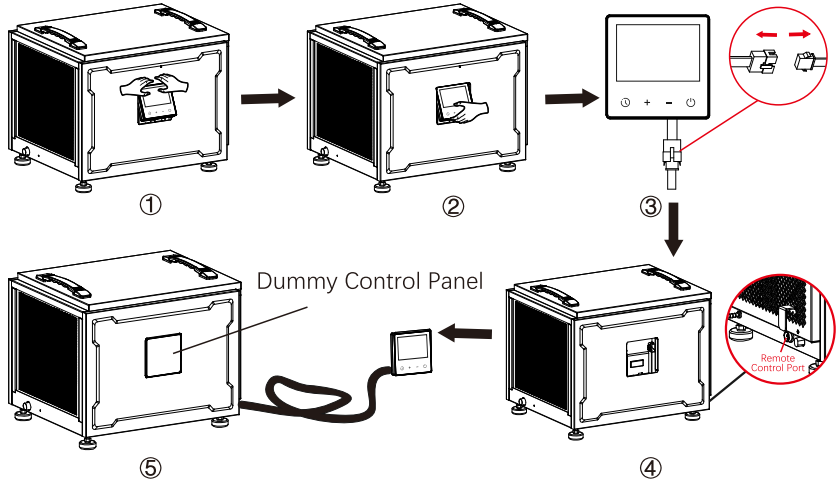

Steps:

1. Release the control panel from the unit:

Push the top of the control panel gently toward the unit until the bottom edge lifts slightly. Some light force may be required, but do not use excessive force.

2. Remove the control panel:

Grab the lifted bottom edge and pull the panel downward carefully. Apply light force; avoid pulling too hard to prevent damage.

3. Disconnect the panel cable:

Carefully detach the cable at the back of the control panel from the unit.

4. Connect the 33ft (10m) signal cable (needs to be purchased separately):

Connect one end to the control panel and the other end to the remote controller port on the dehumidifier. Ensure the cable is properly connected before operating the unit remotely.

Optional: Install the dummy control panel on the unit

Place the dummy control panel (included with the 33ft / 10m signal cable) back onto the unit and gently push it into place until you hear a click.

Caution: Do not pinch or damage the original control panel cable while installing the dummy control panel.

Note: The unit functions normally even without the dummy control panel installed.

SMART FUNCTIONS

1. Compressor 3-Minute Delay

To prevent any potential damage, the dehumidifier incorporates a 3-minute delay after a complete cycle. Following this interval, the compressor automatically starts operation. In essence, if you power off and restart the dehumidifier immediately, the compressor initiates after a 3-minute delay. During this time, the Fan icon is illuminating continuously on the LED screen and until the compressor kicks in, the water droplets icon illuminates.

2. Auto Defrost

If the temperature drops below 60°F, frost may form on the coils. When this happens, the unit will automatically pause the compressor and run the fan to defrost. The Defrost icon will illuminate during this process. Once the frost has cleared, the unit will resume normal operation.

3. Auto-Restart

If a power outage occurs while the dehumidifier is running, it will automatically restart with the previous settings (excluding the timer) once power is restored.

CARE&MAINTENANCE

WARNING:
Ensure the dehumidifier is turned OFF and unplugged before performing any cleaning or maintenance.

1. Cleaning the Dehumidifier

• Wipe the dehumidifier housing with a soft damp cloth.
• Avoid submerging or applying water directly to the dehumidifier or control panel to prevent damage to electronic components.
• Do not use chemical solvents such as benzene, alcohol, gasoline or other heavy-duty cleaners, as they may harm the surface.

2. Cleaning the Air Filter

A blocked filter can impede perfomance. Clean the air filter every 2 weeks or more frequently in dusty or pet-fur-laden environments. The air filter is located on the side of the unit.

Follow the steps below to clean the filter:

• Take out the filter.
• Use a vacuum cleaner with a soft brush attachment to remove large debris or dust.
• Wash the filter in lukewamm, soapy water (below 104℉) or use a neutral cleaning agent.
• Rinse the filter with clean water and thoroughly dry it.
• Re-install the filter.

Note: DO NOT operate the dehumidifier without a filter because dirt and lint will clog it, reducing performance.

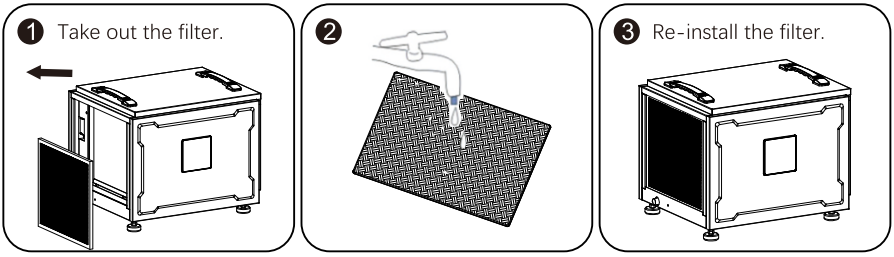

3. Storage Guidelines

• Turn off the unit, disconnect power, and remove the gravity drainage plug.
• Let the unit sit for 24 hours to allow all internal water to drain completely.
• Clean the dehumidifier and air filter thoroughly, ensuring everything is clean and dry.
• Wrap the cord and hose, bundling them for safekeeping.
• Cover the dehumidifier with a plastic bag to protect it from dust and debris.
• Store the dehumidifier upright in a dry, well-ventilated place.