ICC-ES Evaluation Report

ESR-2147

Reissued May 2026

Subject to renewal May 2028



ICC-ES Evaluation Reports are not to be construed as representing aesthetics or any other attributes not specifically addressed, nor are they to be construed as an endorsement of the subject of the report or a recommendation for its use. There is no warranty by ICC Evaluation Service, LLC, express or implied, as to any finding or other matter in this report, or as to any product covered by the report.

Copyright © 2026 ICC Evaluation Service, LLC. All rights reserved.

DIVISION: 31 00 00—EARTHWORK Section: 31 60 00—Special Foundations and Load-Bearing Elements	REPORT HOLDER: PERMA-COLUMN, LLC	EVALUATION SUBJECT: PERMA-COLUMN FOOTINGPAD® MODELS FP-10, FP-12, FP-16, FP-20, AND FP-24	

1.0 EVALUATION SCOPE

Compliance with the following codes:

- 2024, 2021, 2018, 2015, and 2012 *International Building Code®* (IBC)
- 2024, 2021, 2018, 2015, and 2012 *International Residential Code®* (IRC)

Properties evaluated:

- Structural
- Durability

2.0 USES

The FootingPad® models FP-10, FP-12, FP-16, FP-20, and FP-24 are used as footings for the support of post columns in exterior locations or under-floor spaces in buildings of Type V construction under the IBC or any construction under the IRC. The FootingPad® post foundations are used as individual, isolated footings supporting gravity loads only.

3.0 DESCRIPTION

The FootingPad® models FP-10, FP-12, FP-16, FP-20, and FP-24 are molded composite footings manufactured from a proprietary composite of engineered polypropylene and fiberglass. The FootingPad® post foundations are circular, ribbed-plastic pads formed by an injection molding process. See Figures 1, 2, 3, 4 and 5 for dimensions and rib configurations.

4.0 DESIGN AND INSTALLATION

4.1 Design:

The FootingPad® post foundations are designed as shallow or surface rigid footings that transmit, uniformly to the supporting soil, the applied gravity load imposed by a minimum $3^1/_2$-inch by $3^1/_2$-inch (89 mm by 89 mm) post on the FP-10 pad, a minimum $3^1/_2$-inch-by-$3^1/_2$-inch (89-mm-by-89-mm) post on the FP-12 pad, a minimum $4^1/_2$ inch by $5^1/_2$ inch (114 mm by 140 mm) post on the FP-16 pad, a minimum $4^1/_2$ inch by $5^1/_2$ inch (114 mm by 140 mm) post on the FP-20 pad and a minimum $4^1/_2$-inch–by-$5^1/_2$-inch (114-mm-by-140-mm) post on the FP-24 pad. The posts must have a solid base bearing on the pads. Allowable loads are controlled by the type of supporting soil. The post foundations design load must not exceed the allowable gravity loads shown in Table 1.

4.2 Installation:

The post location or spacing must be determined by the loads imposed on the FootingPad® post foundation and the allowable load for the specific type of soil (see Table 1). If in a post application, the post hole must be slightly larger than the post foundation diameter and deep enough to satisfy all design requirements. The bottom of the hole must be flattened and leveled to provide a uniform bearing surface for the FootingPad® post foundation. The FootingPad® post foundations must be placed into the hole with the flat side down. The footing must be tamped until level and stable in the bottom of the hole. The square-cut-post end must be positioned as close as possible to the center of the FootingPad® post foundation and the post must be plumbed. The dirt around the post must be placed in 12-inch lifts (30.5 cm), tamping each lift before more soil is added.

5.0 CONDITIONS OF USE:

The FootingPad® models FP-10, FP-12, FP-16, FP-20, and FP-24 described in this report comply with, or are suitable alternatives to what is specified in, those codes listed in Section 1.0 of this report, subject to the following conditions:

5.1 Installation must comply with this report, the applicable code and the manufacturer's published installation instructions. If there is a conflict between the manufacturer's installation instructions and this report, this report governs.

5.2 The FootingPad® post foundations are used to support post columns for Type V construction under the IBC or any construction under the IRC.

5.3 Exterior FootingPad® post foundations must be placed not less than 12 inches (305 mm) below the undisturbed ground surface (i.e., finished grade) in accordance with IBC Section 1809.4 and IRC Sections R403.1.4 and R507.3.2.

5.4 Exterior FootingPad® post foundations must be installed below the frost line of the locality unless protected from frost in accordance with IBC Section 1809.5 and IRC Sections R403.1.4.1 and R507.3.3.For installation in under-floor spaces such as crawl spaces in compliance with the IBC and IRC, the bottom of interior footings are permitted to be installed at finished grade unless otherwise required by IBC Section 1809.5 or IRC Section R403.1.4.1 for frost protection or by IBC Section 1805.1.2 or IRC Section R408.6 for surface or ground-water.

5.5 The FootingPad® post foundations must be used as individual isolated footings to resist bearing loads only and must not be used to resist lateral or uplift loads.

5.6 The design of the structure supported by the FootingPad® post foundations is outside the scope of this report.

6.0 EVIDENCE SUBMITTED

Data in accordance with the ICC-ES Acceptance Criteria for Molded Plastic Footing Pads (AC49), dated August 2013 (editorially revised July 2024).

7.0 IDENTIFICATION

7.1 Each FootingPad® post foundation must have a permanent label or etching including the name of the manufacturer, the model number, and the evaluation report number (ESR-2147).

7.2 The report holder's contact information is the following:

PERMA-COLUMN, LLC
400 CAROL ANN LANE
OSSIAN, INDIANA 46777
(800) 522-2426
www.footingpad.com

TABLE 1— FOOTINGPAD® POST FOUNDATION ALLOWABLE LOADS (POUNDS) RELATED TO LOAD-BEARING PRESSURES OF FOUNDATION MATERIALS

FOOTINGPAD® MODEL	PAD DIAMETER	LOAD-BEARING PRESSURES OF FOUNDATION MATERIALS[1]			
		1500 psf	2000 psf	2500 psf	3000 psf
FP-10	10 inch	810 lbs.	1081 lbs	1351 lbs	1622 lbs.
FP-12	12 inch	1126 lbs.	1536 lbs	1946 lbs	2356 lbs.
FP-16	16 inch	2009 lbs.	2739 lbs	3470 lbs	4200 lbs.
FP-20	20 inch	2687 lbs.	3973 lbs	5259 lbs	6545 lbs.
FP-24	24 inch	4013 lbs.	5784 lbs	7556 lbs	9327 lbs.

For **SI:** 1 inch = 25.4 mm; 1 lbf = 4.4 N; 1 lbf/ft^2 = 47.9 Pa.

1. Load-bearing pressures of foundation materials shall be determined using the presumptive load-bearing values in IBC Table 1806.2 or IRC R401.4.1, as applicable, or the load-bearing values shall be determined with a site-specific soil investigation, as required by the code official.

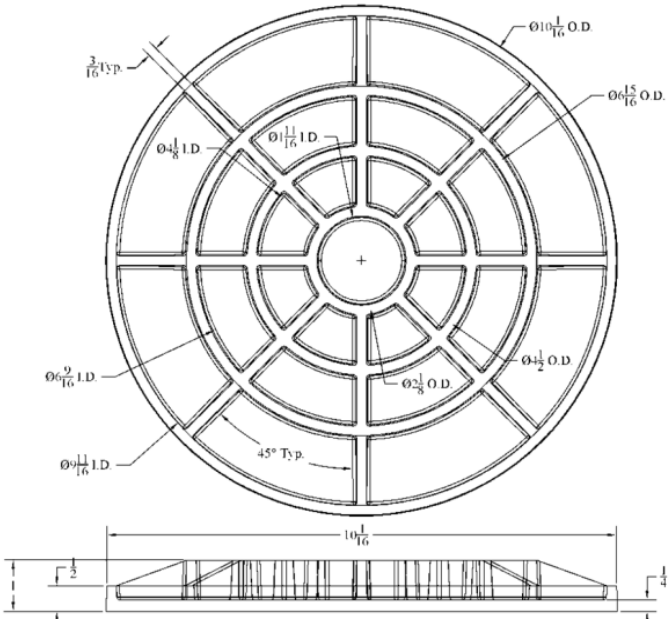

(All Dimensions in inches)
FIGURE 1—FP-10 FOOTINGPAD®

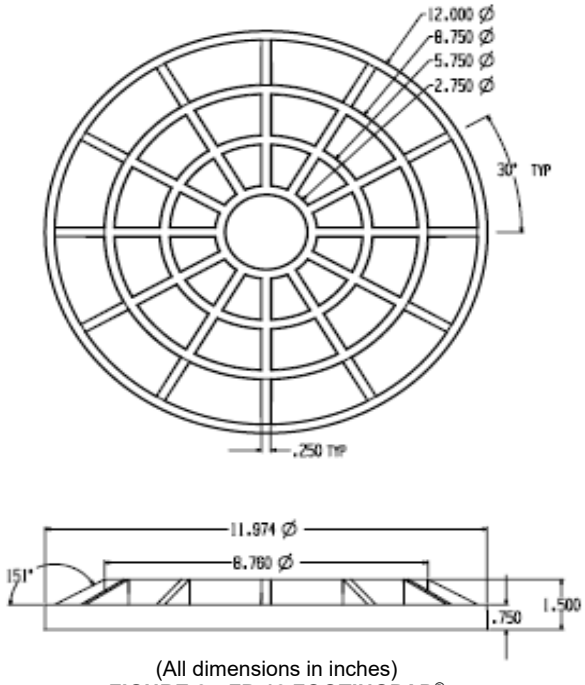

(All dimensions in inches)
FIGURE 2—FP-12 FOOTINGPAD®

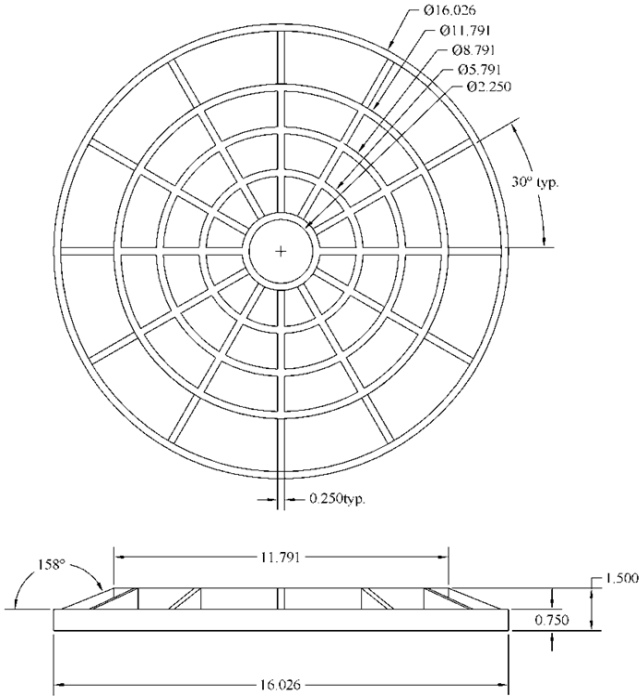

(All Dimensions in inches)
FIGURE 3—FP-16 FOOTINGPAD®

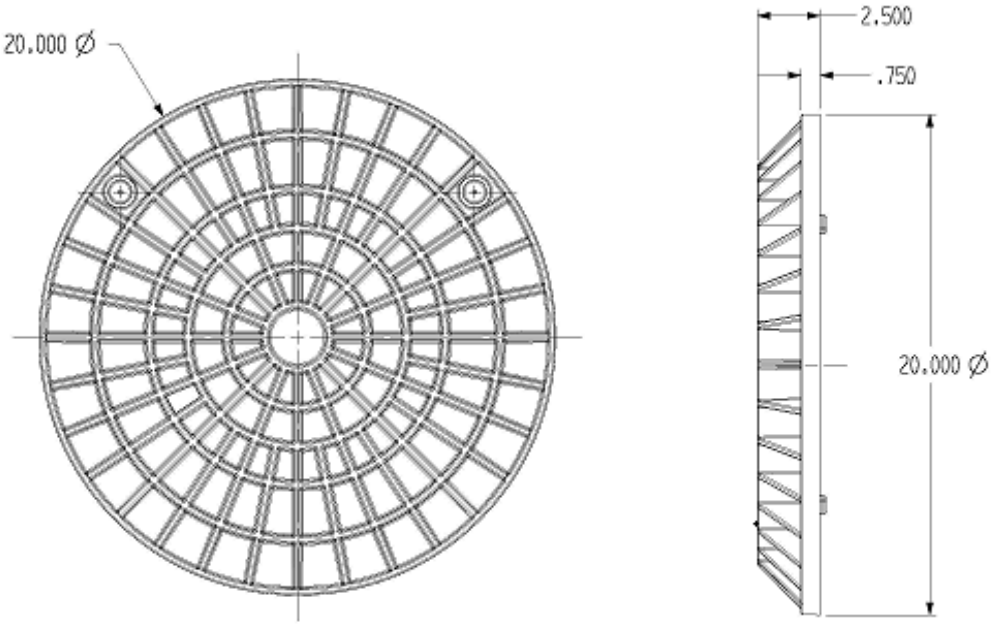

(All Dimensions in inches)
FIGURE 4— FP-20 FOOTINGPAD®

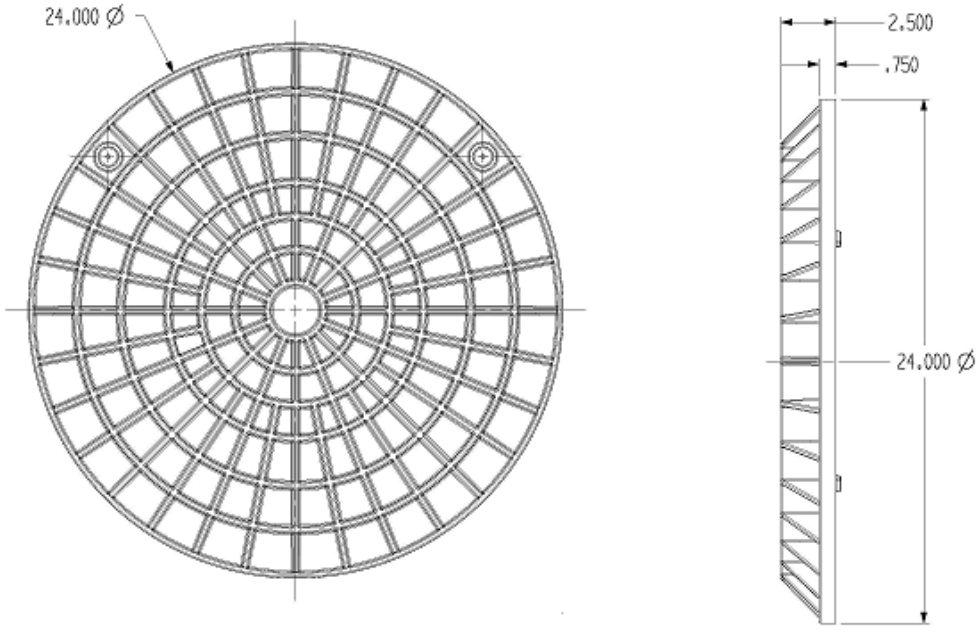

(All Dimensions in inches)
FIGURE 5—FP-24 FOOTINGPAD®