hansgrohe

**Aquno Select**
**Kitchen Faucet, 2-Spray Pull-Out with sBox, 1.75 GPM**
Finishes : **chrome** Part no. : **73830001**

## Description

**Features**

- Consists of: Single lever kitchen mixer
- Swivel range adjustable in 3 steps: 60°, 110° or 150°
- Laminar spray, SatinFlow
- Change between SatinFlow and pull-out sprayer at the touch of a button
- MagFit magnetic sprayhead docking
- Single-hole installation, recommendation: the middle of tap hole drilling should be max. 45 mm from the back side of of the bowl
- Flow: 1.75 GPM (6.6 L/Min)
- Ceramic cartridge
- ⅜" connections
- Integrated double backflow prevention
- sBox for smooth, protected hose guidance in the cabinet
- extension length up to 30" (76cm)
- 1 ⅜" Mounting hole required, recommendation: the middle of tap hole drilling should be max. 45 mm from the back side of of the bowl
- Assembly instructions, sBox, Single lever kitchen mixer

## Item details

List Price $ 845.00

## Technology

## Compliance

## Product image
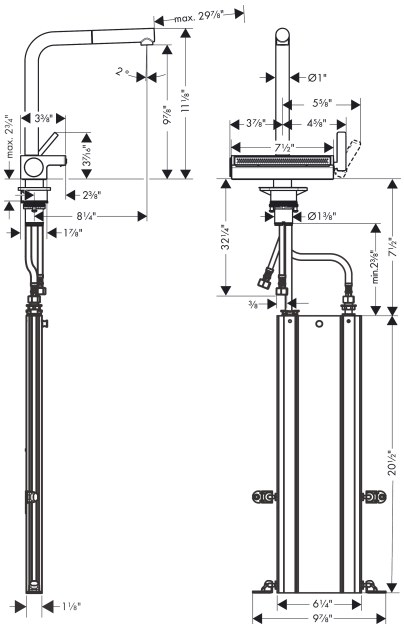
## Scale drawing