PureFlo™ | K-37385

Rough-in cable drain, PVC, 45" cable, less horizontal tube

Features

- For baths 21" – 26" (533 – 660 mm) deep from center of bath overflow outlet to center of bath drain outlet
- 45" (1143 mm) length external cable
- Includes drain ell, overflow ell and overflow tube
- Flexible overflow joint conforms to various bath angles
- No internal linkages, reducing the potential for clogging
- Less horizontal PVC tube and tee
- For use with any PureFlo rotary or push hand controls and pop-up drain stopper kit (sold separately)



Available Colors/Finishes

Color tiles intended for reference only.

NA NA Not Applicable

1-800-4KOHLER (1-800-456-4537)
Kohler Co. reserves the right to make revisions without notice to product specifications.
For the most current specification sheet, go to www.kohler.com USA or www.kohler.ca Canada.
3-27-2026 18:22 - US-CA

THE BOLD LOOK OF KOHLER

Codes/Standards

ASME A112.18.2/CSA B125.2

Material

- Schedule 40 PVC

Recommended Products/Accessories

K-23726 Drain treatment

K-23723 Faucet cleaner

Warranty

See website for detailed warranty information.

KOHLER® One-Year Limited Warranty

1-800-4KOHLER (1-800-456-4537)
Kohler Co. reserves the right to make revisions without notice to product specifications.
For the most current specification sheet, go to www.kohler.com USA or www.kohler.ca Canada.
3-27-2026 18:22 - US-CA

THE BOLD LOOK OF KOHLER.

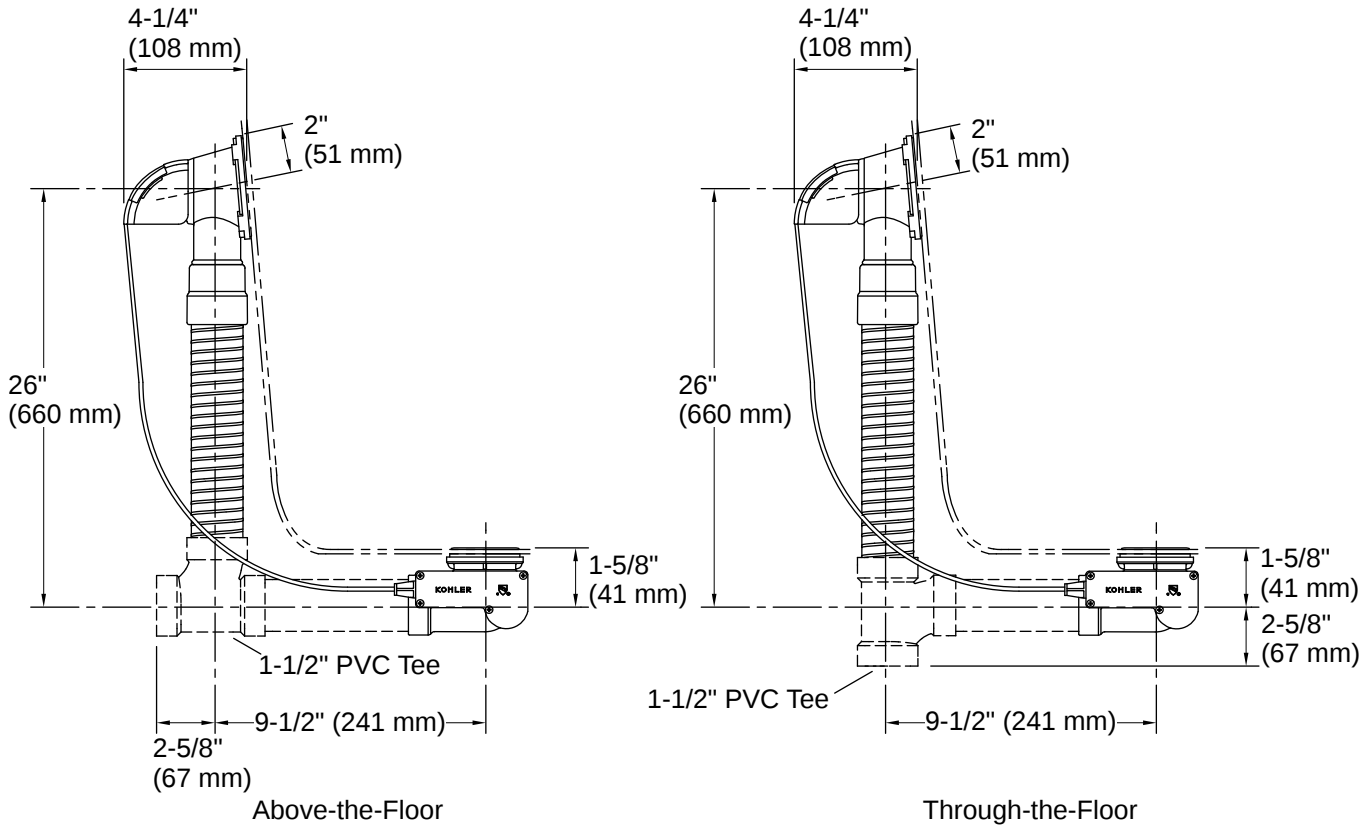

Installation

- Can be installed and tested without required trim kit
- Above- or through-the-floor
- Flexible overflow joint conforms to various bath angles for easy installation

Installation Notes

Install this product according to the installation instructions.

The combined length of the vertical tubing (supplied) and horizontal tubing (not supplied) after being cut for the bath installation must be equal to or less than 40" (1016 mm) for 45" (1143 mm) cable bath drain.

1-800-4KOHLER (1-800-456-4537)
Kohler Co. reserves the right to make revisions without notice to product specifications.
For the most current specification sheet, go to www.kohler.com USA or www.kohler.ca Canada.
3-27-2026 18:22 - US-CA

THE BOLD LOOK OF KOHLER